Pipe Drafting and Design

SECOND EDITION

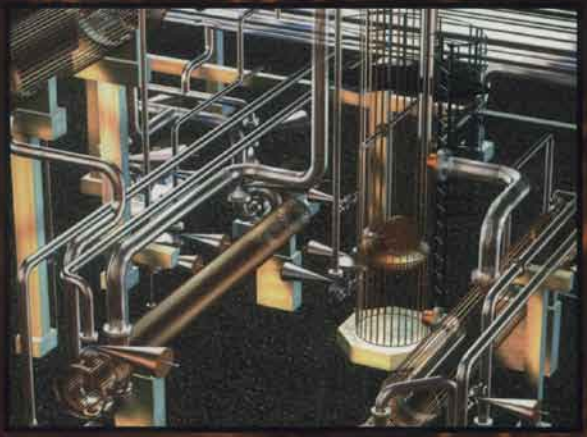

Roy A. Parisher
Robert A. Rhea

G P
P

PIPE DRAFTING AND DESIGN

This page intentionally left blank

PIPE DRAFTING AND DESIGN

Second Edition

Roy A. Parisher • Robert A. Rhea

G P
P

Gulf Professional Publishing
an imprint of Butterworth-Heinemann

Boston, Oxford, Auckland, Johannesburg, Melbourne, New Delhi

Gulf Professional Publishing is an imprint of Butterworth–Heinemann.

Copyright © 2002 by Butterworth–Heinemann

A member of the Reed Elsevier group

All rights reserved.

No part of this publication may be reproduced, stored in a retrieval system, or transmitted in any form or by any means, electronic, mechanical, photocopying, recording, or otherwise, without the prior written permission of the publisher.

Recognizing the importance of preserving what has been written, Butterworth–Heinemann prints its books on acid-free paper whenever possible.

Butterworth–Heinemann supports the efforts of American Forests and the Global ReLeaf program in its campaign for the betterment of trees, forests, and our environment.

Library of Congress Cataloging-in-Publication Data

Parisher, Roy A.
Pipe drafting and design / Roy A. Parisher, Robert A. Rhea–2nd ed.
p. cm.
Includes index.
ISBN 0-7506-7439-3 (alk. paper)
1. Piping—Drawing—Handbooks, manuals, etc. 2. Piping—Design and construction—Handbooks, manuals, etc. I. Rhea, Robert A. II. Title.

TJ930 .P32 2001
621.8'672—dc21

2001023633

British Library Cataloguing-in-Publication Data

A catalogue record for this book is available from the British Library.

The publisher offers special discounts on bulk orders of this book.
For information, please contact:

Manager of Special Sales
Butterworth–Heinemann
225 Wildwood Avenue
Woburn, MA 01801-2041
Tel: 781-904-2500
Fax: 781-904-2620

For information on all Gulf Professional Publishing publications available, contact our World Wide Web home page at: http://www.gulfpp.com

10 9 8 7 6 5 4 3 2 1

Printed in the United States of America

About the Cover

The 3D wire frame model on the cover is a detailed view of the piping model used in this text and shown in the window on the back cover. This model was created with PRO-PIPE™ and rendered in 3D Studio®.

For my parents, Archie and Joyce:
Your love and support are endless.
I could never say "Thank you" enough for what you have given me. Roy

To Mary:
Thank you for your help and support. Robert

Contents

Acknowledgments ix

Preface x

About the Authors xi

Chapter 1
Overview of Pipe Drafting and Design 1
Types of Projects 1
Employers of Pipe Drafters and Designers 1
Engineering and Construction Companies 1
Operating Companies 2
Architectural Engineering Companies 2
Construction Companies 2
Fabrication Companies 2
Preparation for Piping Drafting 2
Technical Skills 3
Personal Skills 3
Creation of Pipe Drawings 3

Chapter 2
Steel Pipe 4
History of Pipe 4
Piping Materials 4
Manufacturing Methods 4
Sizing of Pipe 5
Wall Thickness 6
Methods of Joining Pipe 6
Cast Iron Pipe 8
Plastic Pipe 10
Drawing Pipe 10
Review Quiz 12

Chapter 3
Pipe Fittings 13
90° Elbows 13
45° Elbows 19
Weld Tee 22
The Stub-In 26
Coupling 27
Reducers 28
Weld Cap 31
Use of Fittings 31
Screwed and Socket-Weld Fittings 33
Pipe Nipples 33
Flanged Fittings 37
Cast Iron Fittings 38
Plastic Fittings 38
Review Quiz 39
Exercise Information 40
Chapter 3 Drawing Exercises 41

Chapter 4
Flange Basics 48
Rating Flanges 48
Flange Facings 48
Flange Types 50
Bolts 57
Gaskets 57
Review Quiz 61
Exercise Information 63
Chapter 4 Drawing Exercises 65

Chapter 5
Valves 69
What Is a Valve? 69
Common Valve Types 70
Valve Operators 81
Review Quiz 82
Chapter 5 Drawing Exercises 86

Chapter 6
Mechanical Equipment 90
Types of Equipment 90
Equipment in Use 100
Equipment Terminology 101
Vendor Data Drawings 103
Drawing Equipment 103
Review Quiz 108
Chapter 6 Drawing Exercises 110

Chapter 7
Flow Diagrams and Instrumentation 111
Uses of Flow Diagrams 111
Type of Flow Diagrams 111
Flow Diagram Instruments 114
Piping Symbols 117
Flow Plan Arrangement 117
Review Quiz 118
Exercise Information 119
Chapter 7 Drawing Exercises 120

Chapter 8
Codes and Specifications 123
Codes 123
Specifications 123
Specification Classes 125
Abbreviations 126
Piping Abbreviations 126
Review Quiz 132

Chapter 9
Equipment Layout 133
Plant Coordinate Systems 133
Site Plans 136
Unit Plot Plan 136
Equipment Location Drawing 136
Foundation Location Drawing 136
Piping Drawing Index 141
Review Quiz 142

Chapter 10
Piping Arrangement Drawings, Sections, and Elevations 143
Arrangement Drawings 143
Responsibilities of the Piping Designer 143
Information Sources for Piping Arrangement Drawings 143
Layout Procedures 144
Piping Arrangement Drawing Layout 144
Dimensioning 186
Piping Sections and Elevations: What Are They? 187
Detail Drawings 188
Review Quiz 192
Exercises: Plans, Elevations, and Sections 193

Chapter 11
Standard Piping Details 194
Pipe Rack Spacing 194
Drawing Pipe in the Rack 194
Pipe Flexibility 195
Planning for Heat Expansion 197
Pipe Anchors 198
Pipe Insulation Shoes 198
Pipe Guides 198
Field Supports 199
Dummy Supports 200
Hanger Rods 200
Spring Hangers 201
Pick-up Pipe Supports 201
Review Quiz 202

Chapter 12
Piping Systems 203
Plant Utilities 203
Control Valve Manifolds 204
Utility Stations 206
Meter Runs 206
Sewer and Underground Piping Systems 207
Review Quiz 209

Chapter 13
Piping Isometrics 210
What Is an Isometric? 210
Drawing Piping Isometrics 216
Isometric Dimensions, Notes, and Callouts 218
Isometric Offsets 219
Review Quiz 226
Drawing Exercises 227

Chapter 14
Customizing AutoCAD 231
Creating Command Aliases 231
Using AutoLisp 232
Review Quiz 236

Chapter 15
Three–dimensional Modeling of Piping Systems 237
Advantages of 3D Modeling 237
Checking for Interferences 237
Generating Drawings Automatically from a Model 241
Generating Isometric Drawings Automatically 241
Computer-Aided Engineering of Models 241
Choosing a Modeling Software Package 241
Building a 3D Model Using AutoPlant 242

Appendix A
Dimensional Data 256

Appendix B
Review of Lettering 292

Appendix C
Alphabet of Lines 294

Appendix D
Review of Math 295

Appendix E
Use of the Calculator 296

Appendix F
Architect's Scale 299

Glossary 300

Index 308

Acknowledgments

Dr. Stanley Ebner: Support
Stephan Miller: 3D project model
Linda Ferrell: Rebis
Joe Martinez: Technical Editing.
R. B. Herrscher: Nisseki Chemical Texas, Inc.
Roger Parisher: Southwest Fastners, Hodell-Natco, Inc.
Alan Human: Flexitallic, Inc.
Gene Eckert: ECAD, Inc., Pro-PIPE 3D model, Chapter 15
Anthony W. Horn: Chapter 15

The material, applications, and routines presented in this book have been included for their instructional value. They have been tested for accuracy, but are not guaranteed for any particular purpose. The publisher and authors do not offer any representations or warranties, nor do they accept any liabilities with respect to the material, applications, or routines.

Trademarks
AutoCAD® is registered in the U.S. Patent and Trademark office by Autodesk, Inc.
AutoLISP® is registered in the U.S. Patent and Trademark office by Autodesk, Inc.

ACAD.MNU Version 2000
Copyright © 1986, 1987, 1988, 1989, 1990, 1991, 1992, 1994, 1996, 1997, 1998 by Autodesk, Inc.
Autodesk® provides this program "as is" and with all fault. Autodesk® specifically disclaims any implied warranty of merchantability or fitness for a particular use. Autodesk®, Inc. does not warrant that the operation of the program will be uninterrupted or error free.
AutoPLANT® is registered in the U.S. Patent and Trademark office by Rebis, Inc.

Preface

This book provides students with the basic skills they will need to prepare a wide range of piping drawings. It presents a step-by-step approach to the basic fundamentals students will need to begin a successful career in industrial drafting and design. Chapter One gives a quick overview of the many opportunities in drafting and design for those who master the basic skills presented in the following chapters. Then each chapter builds on the preceding one. It is necessary therefore to master the concepts in a given chapter before going on to the next one. Each chapter concludes with exercises and questions designed to help students review and practice the concepts presented in that chapter.

About the Authors

Roy A. Parisher is a professor in the engineering design graphics department at San Jacinto College in Pasadena, Texas, where he has taught for over 20 years.

Robert A. Rhea is a former associate professor of engineering technology at the University of Houston Downtown, Houston, Texas.

This page intentionally left blank

Overview of Pipe Drafting and Design

In the design of an industrial facility, engineers develop process flow sheets, set up project specifications and design or select equipment. The design drafters use the information supplied by engineers and equipment vendors and applies the knowledge and experience gained in the office and field to design and layout the facility.

In the design and layout of an industrial complex, thousands of piping drawings are needed to provide detailed information to the craftsmen who will construct the facility. Facility design and layout must meet the customer's expectations as well as comply with safety codes, government standards, client specifications, budget, and start-up date.

The piping group has the main responsibility for the design and layout of the facility. Drafters and designers must coordinate their efforts with the civil, structural, electrical, and instrumentation groups throughout the design process. The piping group must provide each design group the necessary information needed to complete their part of the project and have the complete set of plan and construction drawings finished on time. During this time, it may be necessary for designers to visit the plant construction site to establish tie-ins or verify information necessary to complete the design.

TYPES OF PROJECTS

The field of pipe drafting and design includes the widest range of opportunities of any field of design drafting. The types of design projects one could expect to work on may include:

- power plants
- petrochemical complex
- pulp and paper plants
- fertilizer plants
- pipe systems for hospitals and high-rise office buildings
- pharmaceutical plants
- food and beverage plants
- synthetic fuel plants
- offshore platforms
- pipeline installations
- water treatment facilities
- environmental waste disposal

Many projects will be designed for construction in other countries, offering the designer opportunities for travel. Each project presents drafters and designers with opportunities to expand their skills and knowledge of the field of piping design.

EMPLOYERS OF PIPE DRAFTERS AND DESIGNERS

Employers seek to hire pipe drafters and designers range for various companies. Among them are:

- engineering and construction companies
- operating companies
- architectural firms
- construction companies
- fabrication companies

ENGINEERING AND CONSTRUCTION COMPANIES

Engineering and construction companies provide the design and layout of a facility. Many clients award the engineering and design phase of a project to one firm and the construction phase to another. While many operating companies have a small engineering staff who handle the

day-to-day needs of changing and updating drawings, such as adding a pump or other small equipment, they do not have the manpower to design and engineer a grass-roots plant or major add-on. Total plant design and construction may require hundreds of workers and may entail years in the design and construction of the plant.

OPERATING COMPANIES

Operating companies are the clients who engage in the day-to-day operation of a facility and who seek out the services of engineering and construction firms when expanding existing facilities or constructing a new project. Many operating companies keep a small engineering staff in the home office or at the plant job site. Designers are exposed to the day-to-day operations of the facility and follow the construction of small projects. This situation may require that the designer have a broad range of knowledge and skills, as he or she often may be asked to design and lay out the complete project. The design may prepare foundation, steel, and piping drawings as needed, and may even do some electrical and instrumentation design when required.

ARCHITECTURAL ENGINEERING COMPANIES

Pipe drafters and designers employed by architectural engineering companies apply their skills to commercial and high-rise buildings. These may include multi-story office buildings, hospitals, condominiums, shopping malls, or other similar structures. In addition to the industrial piping components such as those found in a typical boiler room, supplementary piping systems must be designed for plumbing, HVAC, and drainage systems that are also required in these structures.

Pipe drafters and designers must therefore be able to develop drawings such as:

- piping flow sheets
- plot plans
- equipment location drawings
- piping arrangement drawings
- piping isometric drawings

Learning the "language" of piping prepares employees for advancement to other departments within the engineering firms. These departments include not only the drafting and design departments but also:

- purchasing
- material control
- material take-off
- estimating
- pipe stress and pipe supports
- CAD support
- project management

CONSTRUCTION COMPANIES

Many firms specialize only in the construction of plants. Here the piping designer may actually help oversee the construction of the facility while working under the supervision of a construction superintendent. The designer is often called upon to make small design changes resulting from mistakes discovered during the construction phase or as customers dictate changes. At the completion of the project, drawings are updated to reflect the many changes made during construction. These drawings are called or referred to as "as-built" drawings.

FABRICATION COMPANIES

Fabrication companies fabricate and ship much of the piping necessary for the construction of the plant to the job site. Many fabrication drawings called **piping spool drawings** must be prepared. These drawings give detailed dimensions from which welders can fabricate the pipe. The drafter who prepares these drawings will not be required to have an extensive background in plant layout, however, the position provides the drafter with valuable experience in materials and material science.

PREPARATION FOR PIPING DRAFTING

Students must have a good background in basic drafting before pursuing a job in the field of pipe drafting and design. Students should have good manual drafting skills related to line quality and freehand lettering. At the same time, students must acquire the necessary background to use the latest software tools such as AutoCAD and PRO-PIPE, which allows them to be more productive. As students advance, they will use a variety of sophisticated software packages, ranging from basic CAD software to 3D solid modeling.

TECHNICAL SKILLS

The drafter must become familiar with the uses of fittings, flanges, valves, and equipment. This will require time and effort to master the recognition of symbol shapes as well as research to find the dimensions needed to draw these items to scale. Often beginning drafters start out making corrections to existing drawings. This is where they acquire the skills and knowledge of piping that will allow them to advance to the position of piping designer.

Drafters who have held field positions as pipe fitters or welders find this real world experience valuable. Many times this experience allows them to advance at a faster pace.

PERSONAL SKILLS

Students should not neglect their speaking, writing, and math skills. Every company appraises future employees during the interview process, not only for technical skills, but also for the personal skills needed to interact with the engineering team. This interaction is a must for the team in order to complete the job with a minimal amount of mistakes. Honesty, reliability, dedication to improving skills, and a positive attitude contribute much to the successful career of the designer. You will be a member of a design team. You may work with people from countries all over the world. Getting along with fellow workers has much to do with successful yearly evaluations and compensation for your efforts.

CREATION OF PIPE DRAWINGS

Manual Drafting

Manual drafters use a variety of triangles, plastic templates (circle and ellipse), and scales to layout piping drawings. While electric erasers are not necessary, they make the job of erasing much easier and faster. Pencils and leads come in a wide range of sizes and shapes. Drafters usually use a 4H lead to draw projection lines and guidelines, and use an H or F lead for other line work and lettering needs. Line thickness also has an important role on piping drawings. A .7mm or wider lead holder is commonly used on major elements of the drawing such as pipe and lettering. Background components such as equipment, foundations, support structures, and dimension lines are typically drawn with a .5mm lead.

One cannot stress enough the importance of quality line work and lettering. Manual drawings are constantly slid in and out of the file drawers and run through blueprint machines. This requires that lettering and line work be neat and of good quality to maintain clarity of dimensions and callouts.

CAD Software Tools

There are many different CAD software tools on the market today. Many engineering companies require their designers to know and use several different CAD software tools. Engineering companies must be prepared to accommodate the client's preference of CAD programs. In today's marketplace, the pipe drafter and designer should learn how to use AutoCAD and MicroStation. These two CAD programs are widely used by engineering firms in the United States and throughout the world.

As with CAD programs, there are several piping software programs on the market today. Engineering firms must be responsive to the needs and preferences of their clients. Software developers steadily develop, revise, and refine programs to meet the demands of engineering and design firms. As with any business each software developer tries to incorporate the special features and amenities into their software package that will attract potential users. Often clients will dictate that all bid packages submitted for a project shall be completed using a particular piping software program. Most piping software packages provide the end user with the ability to develop three dimensional computer models of the completed facility. Software packages such as AutoPLANT, PDS, and PDMS, among others, have the intelligence to create either 2D or 3D drawings.

Steel Pipe

HISTORY OF PIPE

Long ago someone decided carrying water from the nearby stream back to his or her dwelling was time-consuming and laborious. Ingenuity gave birth to invention and the *pipe* was born. Using the natural resources available, early humans probably fashioned the first pipe from bamboo. Needing to move larger amounts of water, they later hollowed out logs. Egyptian and Aztec civilizations made pipe from clay. The first metallic pipes were made by the Greeks and Romans from lead and bronze. The use of iron as a material to manufacture pipe came about with the invention of gun powder. Gun powder, of course, is not used to make the iron, but gun powder necessitated the invention of stronger gun barrels. Iron pipes soon followed. Eventually exotic metals were developed, and pipe became the highly specialized product it is today.

PIPING MATERIALS

Applied in a general sense, pipe is a term used to designate a hollow, tubular body used to transport any commodity possessing flow characteristics such as those found in liquids, gases, vapors, liquefied solids, and fine powders.

A comprehensive list of the materials used to manufacture pipe would be quite lengthy. Some of the materials include concrete, glass, lead, brass, copper, plastic, aluminum, cast iron, carbon steel, and steel alloys. With such a broad range of materials available, selecting one to fit a particular need can be confusing. A thorough understanding of the pipe's intended use is essential. Each material has limitations that may make it inappropriate for a given application. Throughout this text we will base our discussion on carbon steel pipe, the most common material used in the piping industry.

MANUFACTURING METHODS

Carbon steel pipe can be manufactured using several different techniques, each of which produces a pipe with certain characteristics. These characteristics include strength, wall thickness, corrosion resistance, and temperature and pressure limitations. For example, pipes having the same wall thickness but manufactured by different methods may vary in strength and pressure limits. The manufacturing methods we will mention include seamless, butt-welded, and spiral-welded pipe.

Seamless pipe is formed by piercing a solid, near-molten, steel rod, called a billet, with a mandrel to produce a pipe that has no seams or joints. Figure 2-1 depicts the manufacturing process of seamless pipe.

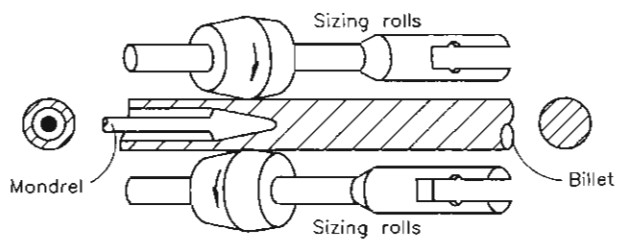

Figure 2-1. Seamless pipe.

Butt-welded pipe is formed by feeding hot steel plate through *shapers* that will roll it into a hollow circular shape. Forcibly squeezing the two ends of the plate together will produce a fused joint or seam. Figure 2-2 shows the steel plate as it begins the process of forming butt-welded pipe.

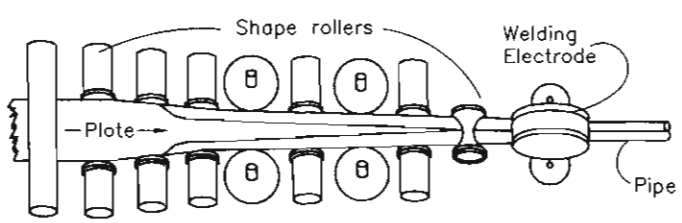

Figure 2-2. Butt-welded pipe.

Least common of the three methods is **spiral-welded pipe.** Spiral-welded pipe is formed by twisting strips of metal into a spiral shape, similar to a barber's pole, then welding where the edges join one another to form a seam. This type of pipe is restricted to piping systems using low pressures due to its thin walls. Figure 2-3 shows spiral-welded pipe as it appears before welding.

Figure 2-3. Spiral-welded pipe.

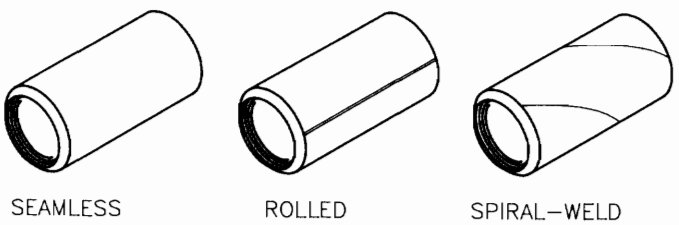

Figure 2-4. Carbon steel pipe.

Figure 2-4 shows the three pipes previously described in their final form.

Each of the three methods for producing pipe has its advantages and disadvantages. Butt-welded pipe, for example, is formed from rolled plate that has a more uniform wall thickness and can be inspected for defects prior to forming and welding. This manufacturing method is particularly useful when thin walls and long lengths are needed. Because of the welded seam, however, there is always the possibility of defects that escape the numerous quality control checks performed during the manufacturing process.

As a result, The American National Standards Institute (ANSI) developed strict guidelines for the manufacture of pipe. Pressure Piping Code B 31 was written to govern the manufacture of pipe. In particular, code B31.1.0 assigns a strength factor of 85% for rolled pipe, 60% for spiral-welded and 100% efficiency for seamless pipe.

Generally, wider wall thicknesses are produced by the seamless method. However, for the many low-pressure uses of pipe, the continuous welded method is the most economical. Seamless pipe is produced in *single* and *double* random lengths. Single random lengths vary from 16′-0″ to 20′-0″ long. Pipe 2″ and below is found in double random lengths measuring 35′-0″ to 40′-0″ long.

SIZING OF PIPE

Just as manufacturing methods differ, there are also different ways to categorize the size of a pipe. Pipe is identified by three different size categories: **nominal pipe size, outside** diameter, and **inside** diameter (see Figure 2-5).

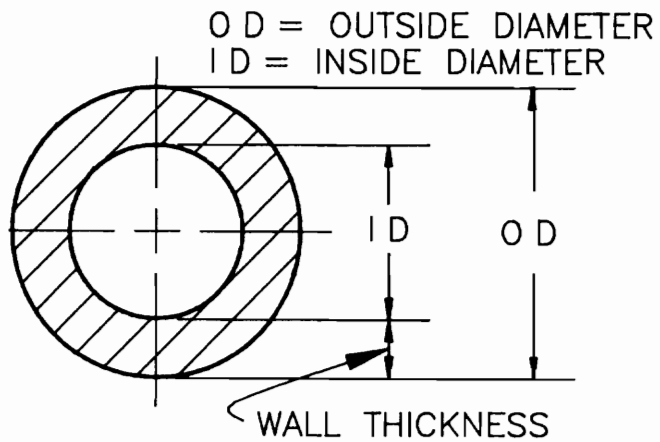

Figure 2-5. Pipe diameters.

Nominal pipe size (NPS) is used to describe a pipe by name only. In process piping, the term *nominal* refers to the name of the pipe, much like the name 2 × 4 given to a piece of lumber. The lumber does not actually measure 2″ × 4″, nor does a 6″ pipe actually measure 6″ in diameter. It's just an easy way to identify lumber and pipe.

Outside diameter (OD) and inside diameter (ID), as their names imply, refer to pipe by their actual outside and inside measurements.

Pipe ⅛″ to 12″ has an outside diameter greater than its nominal pipe size, while pipe 14″ and above has an outside diameter equal to its nominal pipe size.

In process piping, the method of sizing pipe maintains a uniform outside diameter while varying the inside diameter. This method achieves the desired strength necessary for pipe to perform its intended function while operating under various temperatures and pressures.

WALL THICKNESS

Wall thickness is a term used to describe the thickness of the metal used to make a pipe. Wall thickness is also commonly referred to as a pipe's *weight.* Originally manufactured in weights known as *standard, extra strong,* and *double extra strong,* pipe has since increased in complexity with the development of new chemical processes. Commodities with ever-changing corrosive properties, high temperatures, and extreme pressures have necessitated the development of numerous additional selections of wall thicknesses for pipe. Now called *schedules,* these additional wall thicknesses allow a pipe to be selected to meet the exact requirements needed for safe operation. An example of this variance in wall thickness is shown in Figure 2-6.

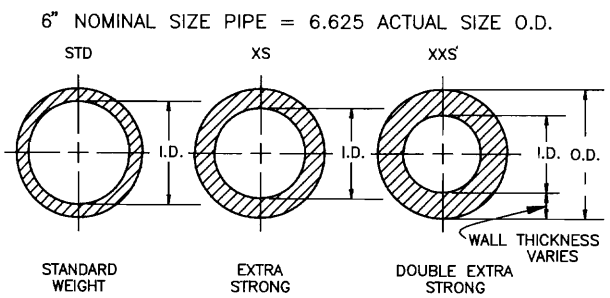

Figure 2-6. Pipe thickness.

As you can see in Table 2-1, nominal size is not equal to either the actual OD or the ID for pipe 12″ and smaller. It is simply a convenient method to use when referring to pipe. As a piping drafter, you should be aware however, pipe 14″ and larger is identified by its actual outside measurement. The chart in Table 2-1 shows typical pipe diameters and wall thicknesses.

The following formula can be used to calculate a pipe's inside diameter (ID):

$$ID = OD \text{ minus } (2 \times \text{WALL THICKNESS})$$

Before selecting pipe, careful consideration must be given to its material, temperature and pressure allowances, corrosion resistance, and more. Buying and installing pipe that does not meet the minimum requirements can be dangerous and deadly. Using pipe that far exceeds what is required to do the job can result in tremendous cost overruns.

METHODS OF JOINING PIPE

There are several methods for joining pipe together. The three methods we will focus on are those most widely used in piping systems made of carbon steel, as shown in Figure 2-7. They are butt-welded (BW), screwed (Scrd), and socket-weld (SW). Later in the chapter, cast iron and plastic pipe uses will be discussed.

Table 2-1
Carbon Steel Pipe Wall Thickness

NOMINAL PIPE SIZE		OUTSIDE DIAMETER		STANDARD		EXTRA STRONG		XX STRONG	
IN.	MM	IN.	MM	IN.	MM	IN.	MM	IN.	MM
2	50.8	2.375	60.3	.154	3.912	.218	5.53	.436	11.07
3	76.2	3.5	88.9	.216	5.486	.300	7.62	.552	15.24
4	101.6	4.5	114.3	.237	6.02	.337	8.58	.674	17.12
6	152.4	6.625	168.3	.280	7.12	.432	10.97	.864	21.94
8	203.2	8.625	219	.322	8.17	.500	12.70	.875	22.22
10	254	10.75	273	.365	9.27	.500	12.70	1.00	25.4
12	304.8	12.75	323.9	.375	9.525	.500	12.70	1.00	25.4
14	355.6	14	355.6	.375	9.525	.500	12.70		
16	406.4	16	406.4	.375	9.525	.500	12.70		
18	457.2	18	457.2	.375	9.525	.500	12.70		

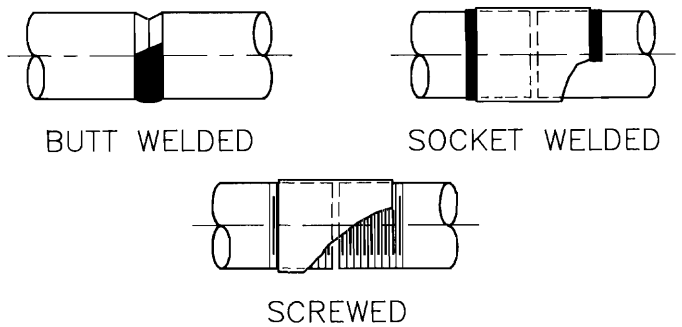

Figure 2-7. Pipe joints.

Butt-Weld Connections

A butt-weld joint is made by welding the beveled ends of pipe together. Beveled ends (BE) indicate that the ends of the pipe are not cut square, but rather are cut or ground to have a tapered edge. In preparation for the welding process, a welder will separate two pieces of pipe by a 1/16″ space, known as a *root gap*. During the welding process, the two ends are drawn together and the 1/16″ gap disappears. If two pieces of pipe 3′-0″ long were welded together in this manner, the result would be a total length of 6′-0″.

However, sometimes a *back-up ring* is used in critical situations. The back-up ring is used when there is a need to prevent the formation of weld icicles inside the pipe. The back-up ring creates a gap of 1/8″ between the two pieces of pipe. In this situation, the ring does not allow the ends of the pipe to be drawn together and keeps them separated by 1/8″.

If two lengths of pipe measuring 3′-0″ each were welded together using a back-up ring, the result would be a total length of 6′-0 1/8″. In this instance, the 1/8″ gap would be shown when dimensioning the pipe. Otherwise, the root gap would not be considered at all. Figure 2-8 shows the 1/16″ root gap and the resulting butt-weld joint.

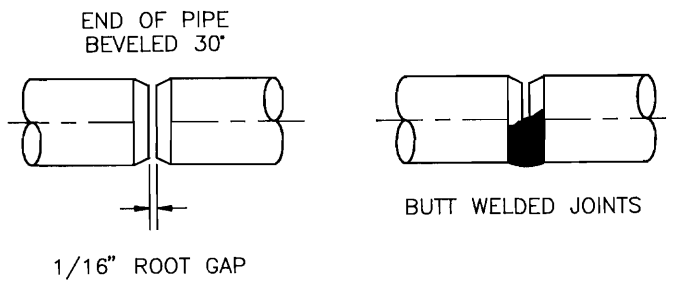

Figure 2-8. Butt-weld joints.

Screwed or Threaded Connections

Another common means of joining pipe is the threaded end (TE) connection. Typically used on pipe 3″ and smaller, threaded connections are generally referred to as *screwed* pipe. With tapered grooves cut into the ends of a run of pipe, screwed pipe and screwed fittings can easily be assembled without welding or other permanent means of attachment. Screwed pipe and its mating fittings will

Table 2-2
American Standard and API Thread Engagement

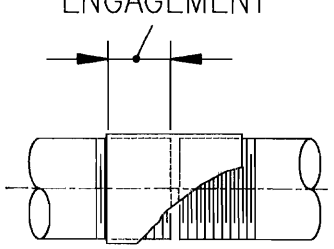

DIMENSIONS : INCHES - MILLIMETERS			
PIPE SIZE INCHES - MM		THREAD ENGAGEMENT INCHES - MM	
1/2	13	1/2	13
3/4	20	9/16	14
1	2.54	11/16	18
1 1/2	38	11/16	18
2	50.8	3/4	20
2 1/2	63.5	15/16	24
3	76.2	1	25.4

have threads that are either male or female. Male threads are cut into the outside of a pipe or fitting, while female threads are cut into the inside of the fitting.

As screwed pipe and fittings are assembled, a short length of pipe is drawn into the fitting. This connection length is called a *thread engagement.* When drawing and dimensioning screwed pipe, a piping drafter must be aware of this *lost* length of pipe. As the diameter of the pipe increases, so will the length of the thread engagement. Table 2-2 provides a chart indicating the thread engagements for small bore pipe.

Socket-Weld Connections

The third method of joining carbon steel pipe is socket welding. When assembling pipe with socket-weld fittings, the pipe is inserted into the fitting before welding, unlike a butt-weld connection that has the pipe and fitting placed end-to-end. Inside the socket-weld fitting is a collar that prevents the pipe from being inserted too deeply into the fitting.

As with screwed connections, a short amount of pipe is lost when the socket-weld connections are made. Table 2-3 provides the socket depths for pipe sizes through 3″ in diameter. Before the weld is made, the pipe fitter will back the pipe off the collar approximately ⅛″ to allow for heat expansion during the welding procedure. Pipe used for socket-weld connections will be prepared with a plain end. Plain end (PE) means the pipe is cut square, or perpendicular to, the long axis, unlike butt-weld fittings that have beveled ends.

CAST IRON PIPE

Not all piping systems require pipe designed to withstand the extreme conditions found in process piping facilities. Cast iron pipe, which has been in use for centuries, is used primarily in gravity flow applications such as storm and sanitary sewers, and waste and vent piping installations. Residential, commercial, and industrial facilities routinely are built with some form of gravity flow systems. The corrosion resistance properties of cast iron pipe make it the ideal product for permanent below-ground gravity flow installations.

The term *cast iron* refers to a large group of ferrous metals. Cast irons are primarily alloys of iron that contain more than 2% carbon and 1% or more silicon. Cast iron, like steel, does corrode. What makes cast iron different is its graphite content. As cast iron corrodes, an insoluble layer of graphite compounds is produced. The density and adherent strength of these compounds form a barrier around the pipe that prevents further corrosion. In steel this graphite content does not exist, and the compounds created during corrosion cannot bond together. Unable to adhere to the pipe, they flake off and expose an unprotected metal surface that perpetuates the corrosion cycle. In tests of severely corroded cast iron pipe, the graphite

Table 2-3
Forged Steel Socket Weld Fittings

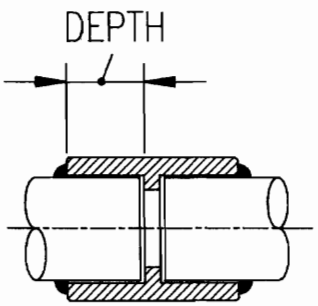

DIMENSIONS : INCHES - MILLIMETERS			
PIPE SIZE INCHES - MM		SOCKET DEPTHS INCHES - MM	
1/2	13	1/2	13
3/4	20	9/16	14
1	2.54	5/8	16
1 1/2	38	3/4	20
2	50.8	7/8	22
2 1/2	63.5	1 1/8	29
3	76.2	1 3/8	35

compounds have withstood pressures of several hundred pounds per square inch, although corrosion had actually penetrated the pipe wall. Considering the low cost of raw manufacturing materials and the relative ease of manufacture, cast iron is the least expensive of the engineering metals. These benefits make cast iron the choice application in environments that demand good corrosion resistance.

Joining Cast Iron Pipe

Cast iron pipe is grouped into two basic categories: hub and spigot, and hubless.

The hub, or bell, and spigot joint uses pipe with two different end types. The hub end of the pipe has an enlarged diameter, thus resembling a bell. The spigot end of the adjoining pipe has a flat or plain-end shape. The spigot is inserted into the bell to establish a joint. Two methods of preventing leaks on bell and spigot joints are *compression* and *lead and oakum*. The compression joint uses a one-piece rubber gasket to create a leak-proof seal. As shown in Figure 2-9, when the spigot end of the pipe is placed into the hub containing a gasket, the joint is sealed by displacing and compressing the rubber gasket. Unlike welded pipe, this joint can absorb vibration and can be deflected up to 5° without leakage or failure.

The lead and oakum joint is made with oakum fiber and molten lead to create a strong, yet flexible, leak-proof and root-proof joint. When the molten lead is poured over the waterproof oakum fiber, which is a loose, oil laden, hemp-like packing material, the joint becomes completely sealed. Water will not leak out and, when used underground, roots cannot grow through the joints. See Figure 2-10.

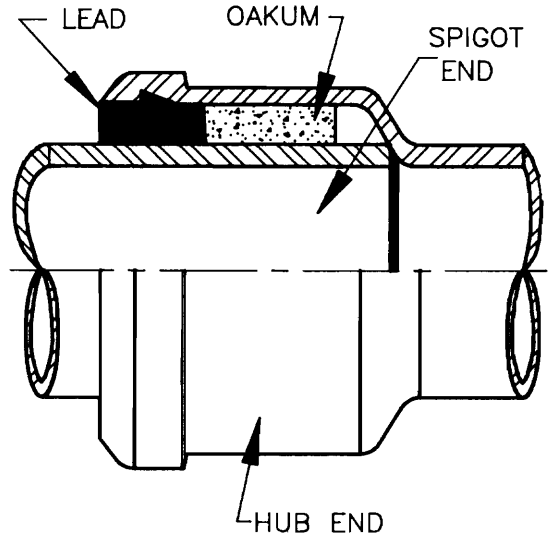

Figure 2-10. Lead and oakum joint.

Hubless cast iron pipe uses pipe and fittings manufactured without a hub. The method of joining these pipe and fittings uses a hubless coupling that slips over the plain ends of the pipe and fittings and is tightened to seal the ends. Hubless cast iron pipe is made in only one wall thickness and ranges in diameter from 1½″ to 10″. Figure 2-11 depicts the hubless cast iron pipe joint.

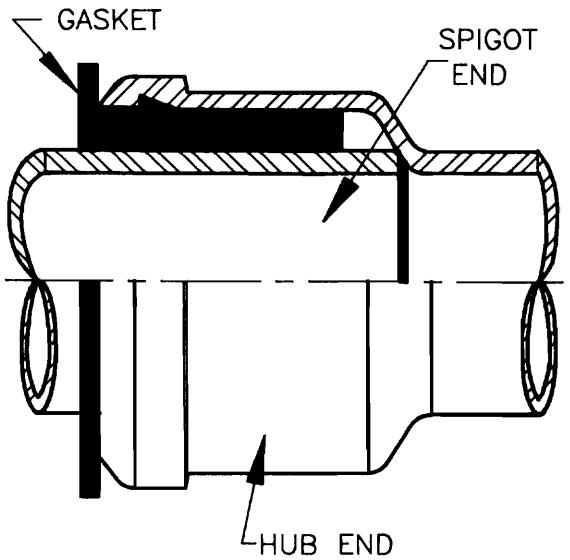

Figure 2-9. Compression joint.

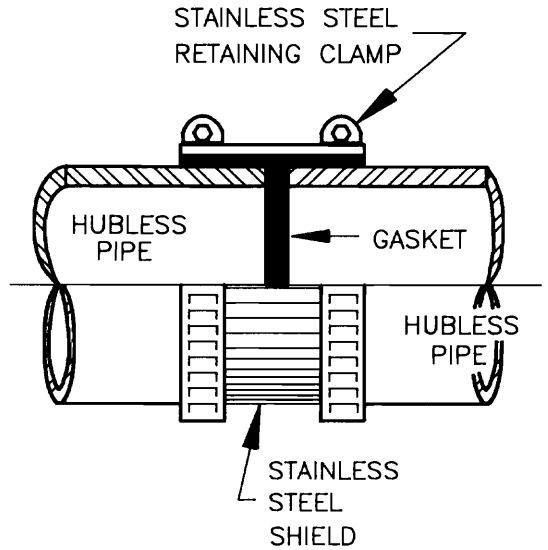

Figure 2-11. Hubless pipe coupling.

PLASTIC PIPE

The latest entry into the materials list for manufacturing pipe is plastic. Not originally thought of as a product capable of performing in the environs of a piping process facility, plastic has emerged as a reliable, safe, and cost-effective alternative material. There is a broad range of plastic compounds being developed today.

For piping systems, two categories are most effective: fluoroplastics and thermoplastics. Fluoroplastics are found in materials like PTFE, PVDF, ECTFE, CTFE, PFA, and FEP. As a group, fluoroplastics perform extremely well in aggressive chemical services at temperatures from –328 F° to +500 F°. Thermoplastics are those that require melting during the manufacturing process. These plastics can be welded or injection molded into shapes for machining into piping system components.

For some piping systems, it is now inconceivable not to use plastics. Pipes made from plastic are replacing traditional, expensive materials like glass or ceramic-lined pipe. Some plastics such as UHMW PE, PVDF, CTFE, and nylon have such excellent wear resistance that they prove in Taber Abrasion Tests to be five to ten times better in this regard than 304 Stainless Steel. The Taber Abrasion Test cycles an abrasive wheel over the face of a plate made of the material being tested. After 1,000 cycles of the wheel, the plate is measured to determine the amount of weight loss. Table 2-4 lists the results.

Table 2-4
Taber Abrasion Tester

Abrasion Ring CS-10, Load 1kg	
Nylon 6-10	5mg/1000 cycles
UHMW PE	5
PVDF	5–10
PVC (rigid)	12–20
PP	15–20
CPVC	20
CTFE	13
PS	40–50
Steel (304 SS)	50
ABS	60–80
PTFE	500–1000

Joining Plastic Pipe

Plastic pipe can be joined by one of the following methods: threading, solvent cement, or fusion. Threading plastic pipe is not a viable option because it is expensive. Heavy wall thicknesses are required, and leaks from high pressures and expansion and contraction are difficult to control. Joints made with solvent cement have proven more reliable. Though, once hardened, cemented joints cannot be disassembled. They offer good resistance to abrasive chemical and high-pressure commodities and are available in a large selection of fittings without the need of threads. Heat fusion must be performed on some plastic compounds that are resistant to chemical solvents. Pipe can either be butt-joined or socket-joined. Heat fusion can be used with thinner wall thicknesses and are pressure resistant beyond the burst pressure of the pipe. Socket fittings provide large surface contact between pipe and fittings and are resistant to separation. For this reason they cannot be disassembled.

Though fabrication with plastic may sound simple, caution must be exercised when using plastic pipe. The effectiveness of a particular grade of plastic must be tested before it is chosen for a particular service. Four important variables must be evaluated: chemical resistance, pressure limitations, temperature limitations, and stress. The various molecular components of plastics make them susceptible to chemical reactions with certain compounds. Hazardous mixtures must be avoided. Pressure and temperature limitations must be established for obvious reasons. Pipe that is overheated or pressurized beyond capacity can rupture, split, or burst. Stress, as applied to pipe, entails physical demands such as length of service, resistance to expansion and contraction, and fluctuations in pressure and temperature. Excessive stresses in the form of restricted expansion and contraction, and frequent or sudden changes in internal pressure and temperature must be avoided.

DRAWING PIPE

Pipe can be represented on drawings as either *single line* or *double line*. Pipe 12″ and smaller is typically drawn *single line* and pipe 14″ and larger is drawn *double line*. Single-line drawings are used to identify the centerline of the pipe. Double lines are used to represent the pipe's nominal size diameter.

The standard scale used on piping drawings is ⅜″ = 1′–0″. Typically hand drawn, single-line pipe is drawn with a .9mm or a double wide .7mm fine-line lead holder. When drawing single-line pipe with **AutoCAD**, a **PLINE** having a width of approximately .56″ (9⁄16″) is used on full-scale drawings or .0175″ when drawing to ⅜″=1′-0″. Double-line pipe uses standard line widths to draw the pipe's nominal size diameter. A centerline is used on all double pipe to allow for the placement of dimensions.

Figure 2-12 provides several representations of pipe as it may appear on a drawing.

When pipe is represented on a drawing, typically the pipe's nominal size dimension is used to identify pipe size. One would find it difficult to draw a 4″ pipe to its actual outside diameter of 4′-0½″ especially on such a small scale as ⅜″ = 1′-0″.

There are certain applications, however, when the pipe's true outside diameter dimension is used to represent the pipe on a drawing. Drawings created with most software packages are an example. Piping software programs draw with such accuracy that pipe is drawn using the actual outside diameter.

NOTE: Pipe created by means other than a piping software program in this text will be drawn using nominal sizes. Be aware that drawings created with a piping software program use actual outside dimensions and will differ slightly from manual and **AutoCAD** generated drawings.

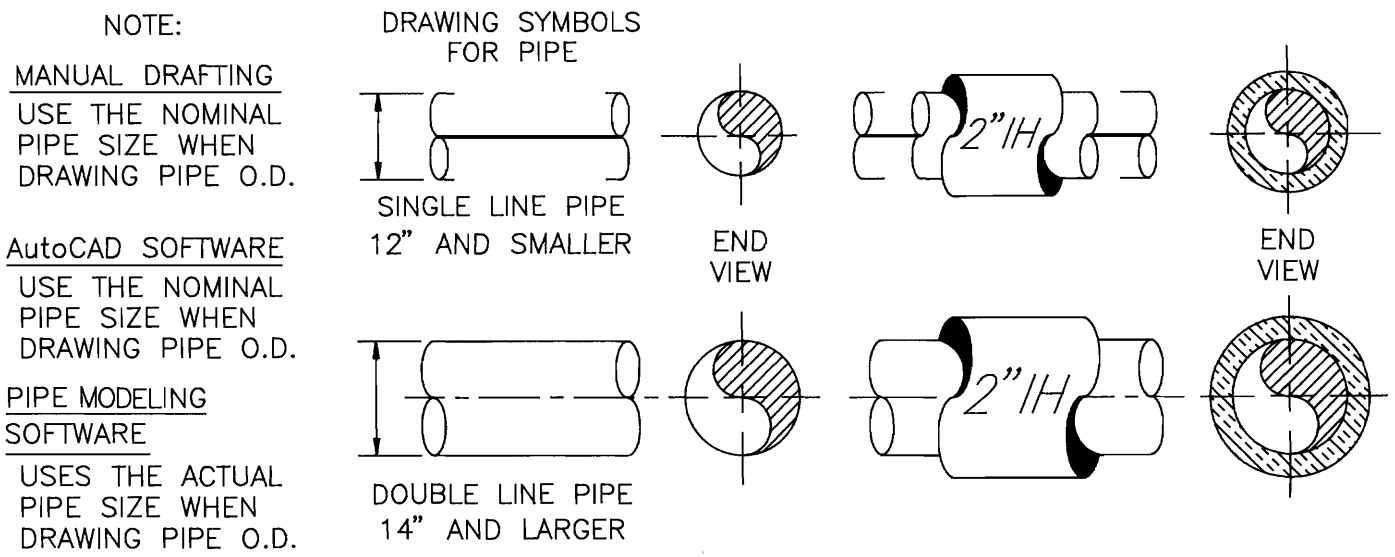

Figure 2-12. Pipe representations.

CHAPTER 2 REVIEW QUIZ

1. Name three methods of manufacturing carbon steel pipe.

_____

_____

_____

2. Name the three most commonly used end preparations for joining pipe.

_____

_____

_____

3. What is meant by the term *nominal size pipe*?

_____

4. Which diameter of pipe varies as the wall thickness changes?

_____

5. What is the most common material used in the manufacture of pipe?

_____

6. When drawing pipe, which pipe sizes are drawn single line and which sizes are drawn double line?

_____

7. How long is the gap between two lengths of pipe when a back-up ring separates them?

_____

8. What is the name for the amount of pipe "*lost*" when screwed connections are used?

_____

9. What is the standard drawing scale used on piping drawings?

_____

10. Name three-methods for joining carbon steel and plastic pipe.

_____

_____

_____

Pipe Fittings

Fittings are fabricated pieces of pipe that are used to make changes of direction (elbow), branch from a main pipe (tee), or make a reduction in line size (reducer) (see Figure 3-1).

Because fittings are part of the piping system, they must match as closely as possible in specification and rating to the pipe to which they are being attached. Fittings, like pipe, are manufactured and classified according to their wall thickness. There are many more wall thicknesses of pipe however than there are thicknesses of fittings. Fittings are commercially manufactured in standard weight, extra strong, Schedule 160, and double extra strong.

In the petrochemical industry, most companies have guidelines known as piping specifications that state pipe 3″ and larger will be fabricated with butt-welded connections. These specifications, or *specs*, as they are more commonly called, may also require pipe smaller than 3″ to have screwed or socket-weld connections. For uniformity, the previously mentioned specifications will be used throughout this book as a basis for determining pipe connection requirements. However, this is not to say this is the only spec that can be written. There may be cases where small bore pipe is butt-welded, while larger sizes may be screwed or socket-welded.

90° ELBOWS

Of all the fittings, the elbow is the one most often used. Simply put, the elbow, or *ell*, is used when a pipe changes direction. Elbows can turn up, turn down, turn

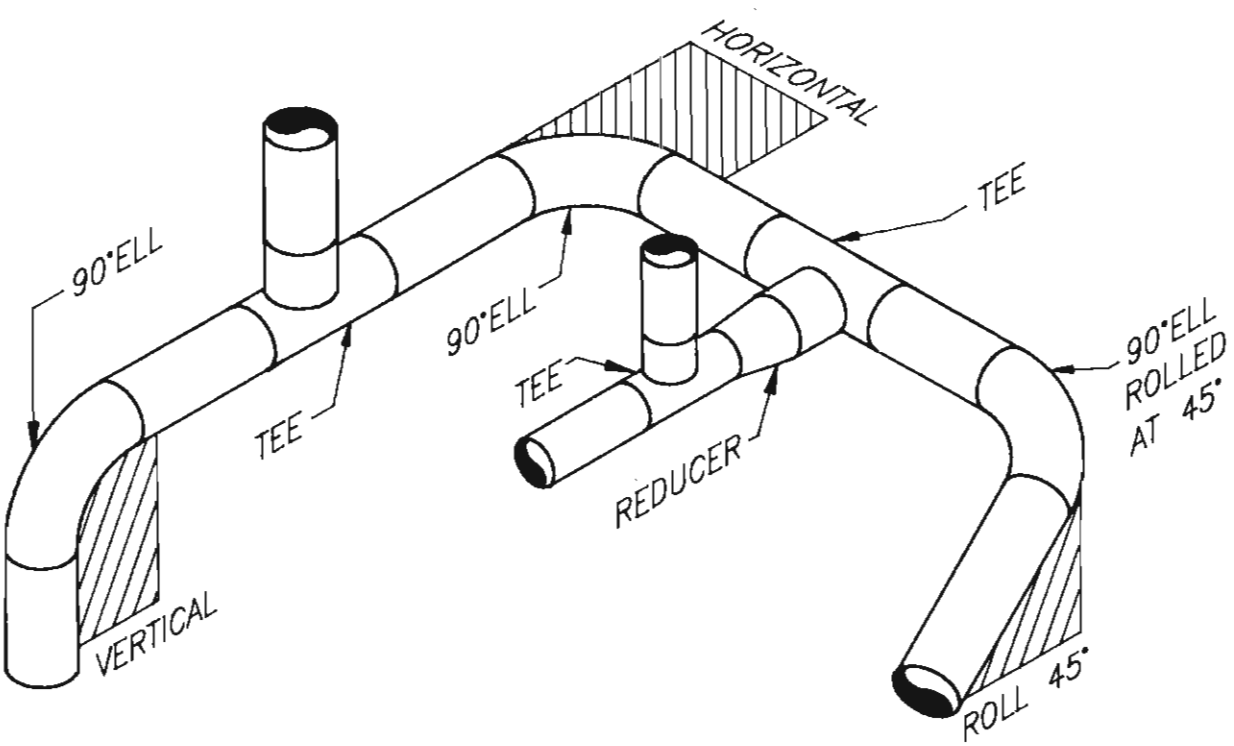

Figure 3-1. Fittings.

left, right, or any angle in between (see Figure 3-1). Ninety degree ells can be classified as one of the following:

- long-radius ell
- short-radius ell
- reducing ell
- mitered ell

Of these four types, the long-radius elbow shown in Figure 3-2, is the one used most often.

When determining the length of an elbow, one must establish the *center-to-end* dimension. The center-to-end dimension is the measurement from the centerline of the fitting to the end of the fitting (see Figure 3-3).

Notice the relationship between the nominal size and the length of the fitting. The fitting's length is equal to the nominal pipe size plus *one-half* of the nominal size. A simple formula in the next column makes calculating this dimension easy to remember.

The length of the fitting is equal to 1½ times the nominal pipe size or:

Nominal pipe size × 1½ = fitting's length.

Example: *8″ × 1½ = 12″*

NOTE: Use this formula for butt-weld fittings only.

Long-Radius Elbow

Dimensional sizes of fittings are typically provided by the manufacturer of the fitting. Manufacturers issue dimensioning charts containing lengths for a particular fitting. The dimensional charts used to establish sizes of fittings discussed in this text are listed on the Welded Fittings-Flanges Chart provided in Appendix A. As a reference, portions of that chart are used throughout this chapter when fitting measurements are needed. Using the Welded Fittings-Flanges Chart in Figure 3-4, find the 90° long-radius elbow. The measurement labeled *A* represents the center-to-end length of the fitting. To find the fitting's length in inches, locate the appropriate nominal pipe size

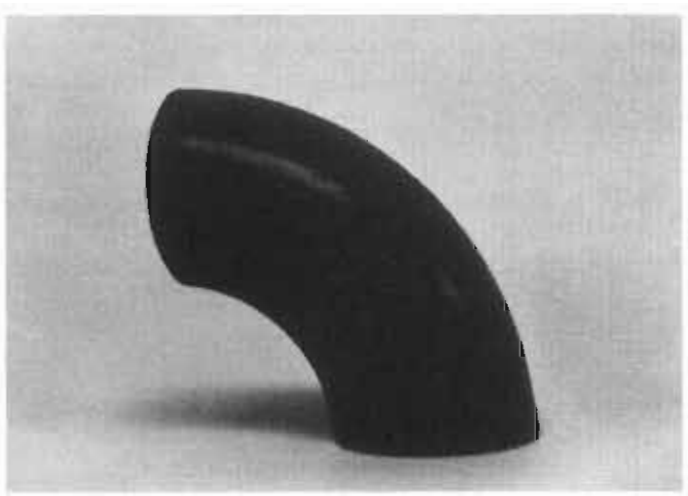

Figure 3-2. Long radius elbow.

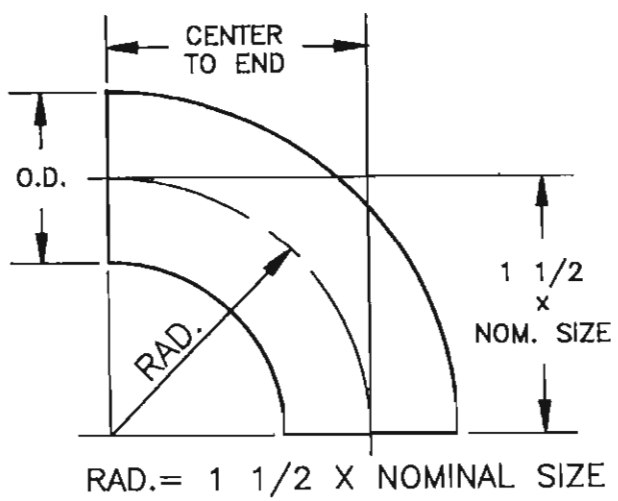

Figure 3-3. Center-to-end dimension of a long-radius elbow.

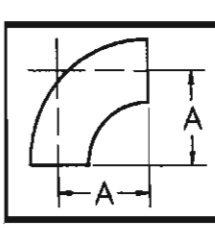

NOMINAL PIPE SIZES INCHES		2"	3"	4"	6"	8"	10"	12"	14"
O.D. of PIPE		$2\frac{3}{8}$	$3\frac{1}{2}$	$4\frac{1}{2}$	$6\frac{5}{8}$	$8\frac{5}{8}$	$10\frac{3}{4}$	$12\frac{3}{4}$	14
90°L.R. ELL	A	3	$4\frac{1}{2}$	6	9	12	15	18	21

Figure 3-4. Welded Fittings-Flanges Chart.

in the row labeled **Nominal Pipe Sizes**. Follow across the chart to find the desired pipe size. Below that size, in the row labeled **A**, is the center-to-end dimension of the 90° long-radius elbow.

The center-to-end dimension (*A*) will be used as the radius for the elbow's centerline.

Drafting Symbols for the Long-Radius Elbow

The drafting symbols for the 90° long-radius elbow are shown in Figure 3-5.

To better visualize the long-radius elbow, we have attached a piece of pipe to each end of the fitting. This shows how the elbow might appear if it were welded to a piece of pipe. Remember, in the single-line symbol only the centerline of the elbow is drawn. The double-line symbol requires that one-half of the pipe OD should be added and subtracted respectively from the elbow's centerline.

Drawing the Long-Radius Elbow

Two step-by-step methods will be presented for constructing the 90° long-radius elbow. Figure 3-6 shows the steps using manual drafting techniques and Figure 3-7 shows those steps using **AutoCAD** commands.

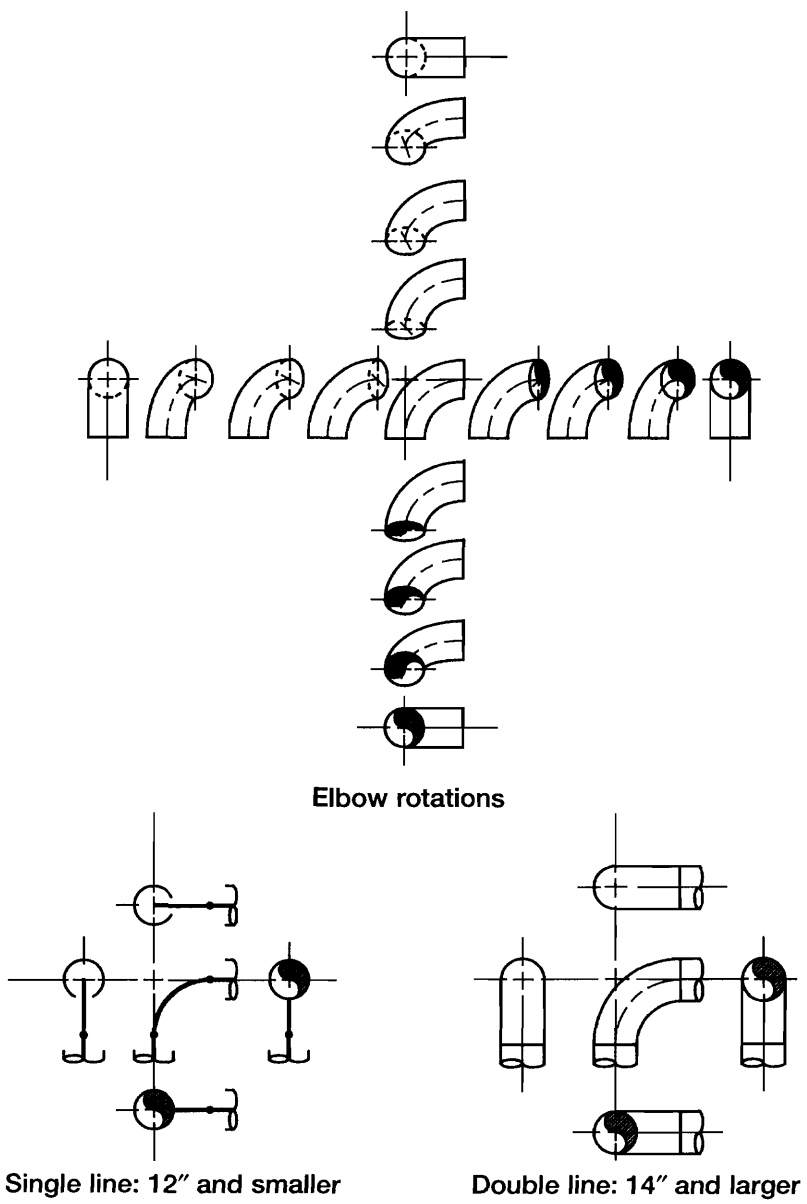

Figure 3-5. 90° long-radius elbow.

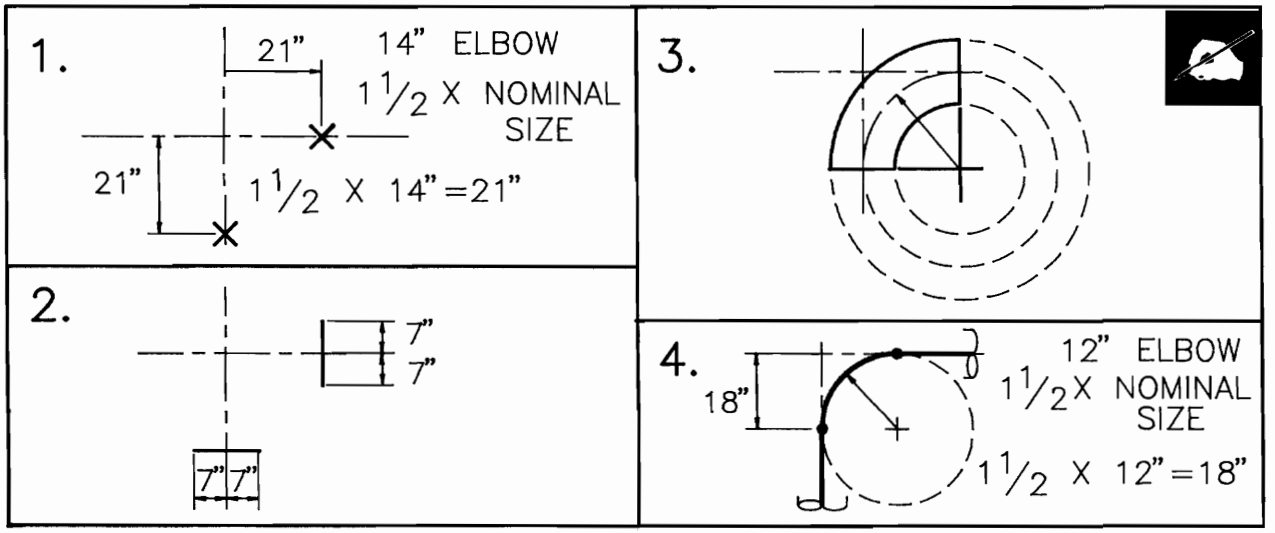

Figure 3-6. 14″-90° elbow. Manual drafting solutions.

Step 1. Mark off the distance from the center of the fitting to the end of the fitting. This is the **A** dimension from the Welded Fittings-Flanges Chart.

Step 2. Determine the nominal size of pipe and mark off one-half of its size on each side of the fitting's centerline.

Step 3. Extend the ends of the fitting down and across respectively until they intersect. This will be the centerpoint for drawing the arcs that will form the ell. Use a circle template or compass to draw the arcs.

Step 4. Remember, for fittings 12″ and below, only the arc representing the elbow's centerline is drawn when creating single-line symbols.

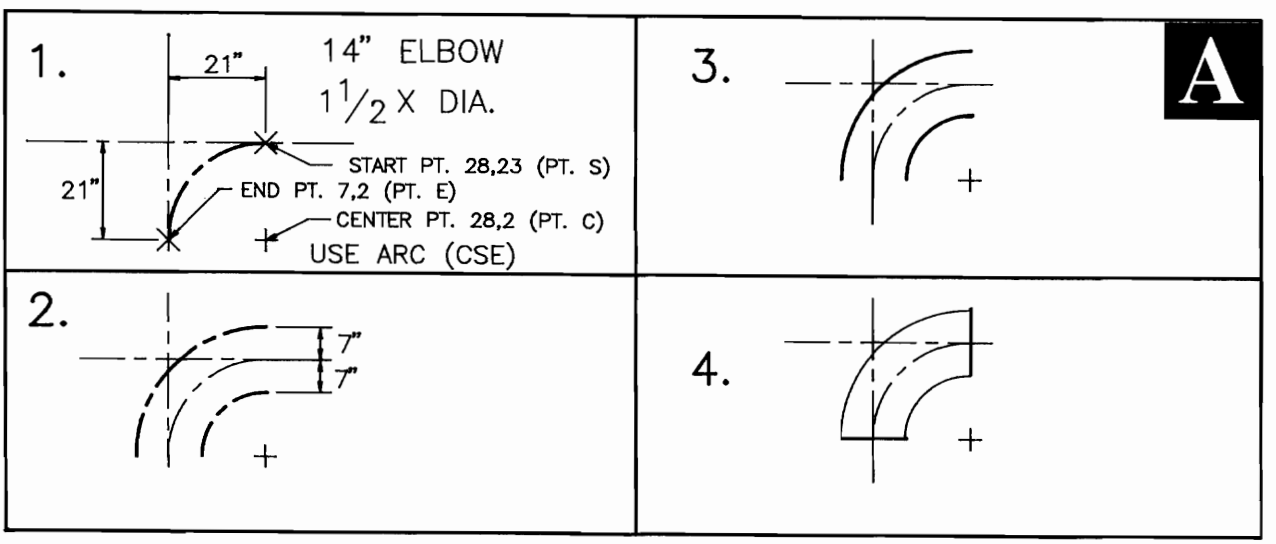

Figure 3-7. 14″-90° elbow. **AutoCAD** commands.

Drawing set-up. Set **LINETYPE** to *Center.*

Set **LTSCALE** to 32.

Set **LIMITS**: lower left—0,0; upper right—36,36.

ZOOM, *All.*

Step 1. Use the **ARC** command, *CSE* option to draw the elbow's centerline from 28,2 (PT.C). The 21″ radius should be measured above **PT.C**.

Step 2. Use **OFFSET** to draw the inside and outside arcs of the elbow. The offset distance will be equal to one-half of the nominal pipe size, that is, 7″.

Step 3. Use **CHPROP** to change the inside and outside arcs to *Continuous* linetypes.

Set **LINETYPE** to *Continuous.*

Step 4. Use the **LINE** command to draw the ends of elbow.

NOTE: The step-by-step instructional procedures presented using computer-aided drafting techniques presume each student has a comprehensive knowledge of basic **AutoCAD** commands. These self-instructional steps provide a simple method to create each fitting. They are not intended to restrict the student to any particular commands. Each student is encouraged to experiment with new commands that may achieve the same result.

Short-Radius Elbow

Another elbow that may be used under certain circumstances and with permission from the customer is the 90° short-radius elbow. The 90° short-radius ell makes a much sharper turn than does the long-radius ell (see Figure 3-8). Conversely, the short-radius ell also creates a rather large pressure drop inside the line and does not have the smooth flow characteristics the long-radius ell has. For these reasons the short-radius ell is seldom used.

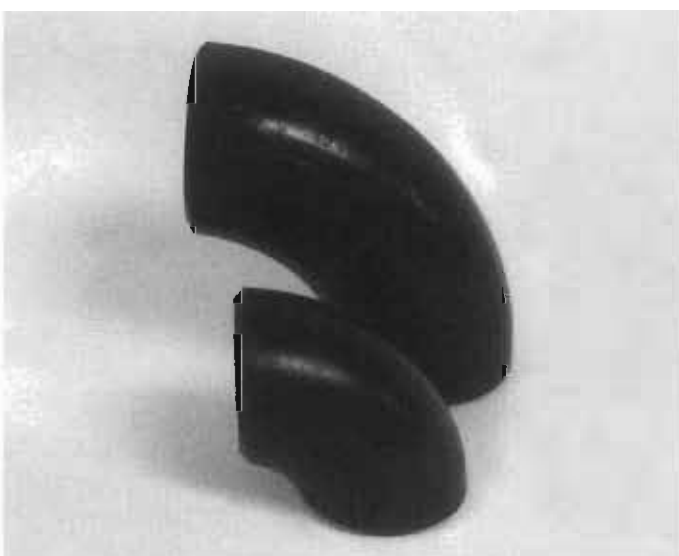

Figure 3-8. Long-radius and short radius elbows.

A simple formula can be used to calculate the center-to-end dimension of the fitting for the 90° short-radius ell. The length of the fitting is equal to the nominal pipe size (see Figure 3-9) or *nominal pipe size* × *1* = *fittings length*.

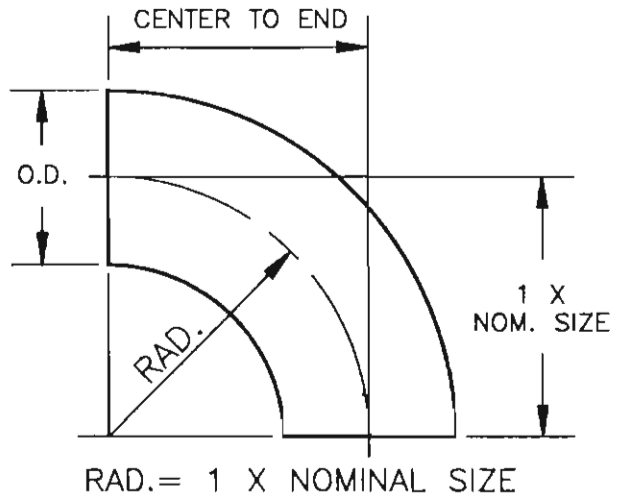

Figure 3-9. Center-to-end dimension of the short-radius elbow.

Drafting Symbols for the Short-Radius Elbow

The drawing symbols for a short-radius elbow are shown in Figure 3-10.

NOTE: Whenever a short-radius ell is used, the abbreviated note ***S.R.*** must always be placed adjacent to the drawing symbol.

Mitered Elbows

The last 90° elbow we will mention is the mitered elbow. The mitered elbow is not an actual fitting, but instead is a manufactured turn in the piping system. This elbow is made by making angular cuts in a straight run of pipe and then welding the cuts together after they have been rolled to a different angle (see Figure 3-11).

The mitered ell may be classified as one, two, three, or four weld miters. The number of welds used depends on the smoothness of flow required through the turn. A two-weld miter will create more turbulence within the pipe than will a four-weld miter.

Drafting Symbols for Mitered Elbows

Figure 3-12 shows the double-line drafting symbols for two-weld and three-weld mitered elbows. Unlike the previous ells, the weld lines in the adjacent views of the mitered elbow are represented by ellipses. Ellipses are used because the welds are not perpendicular to your line of sight. Therefore, when projecting from the front view to any of the four adjoining views, the welds must be drawn elliptical in shape.

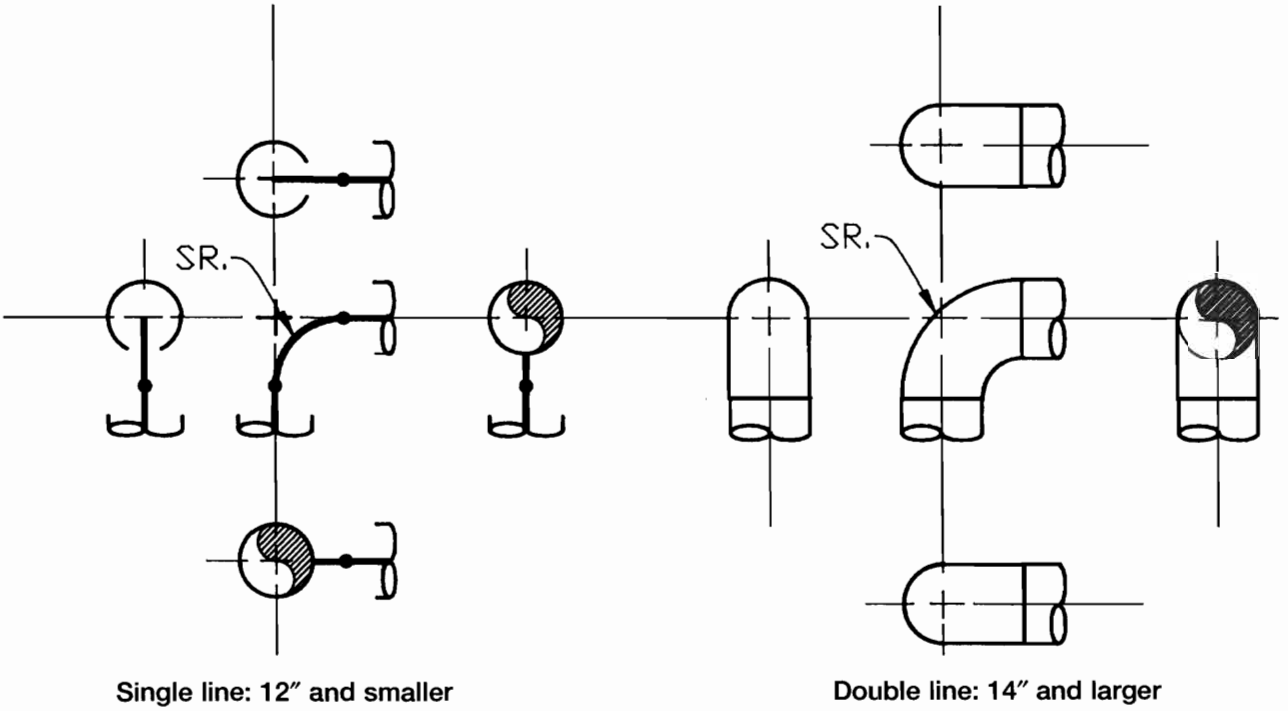

Figure 3-10. Short-radius elbow symbols.

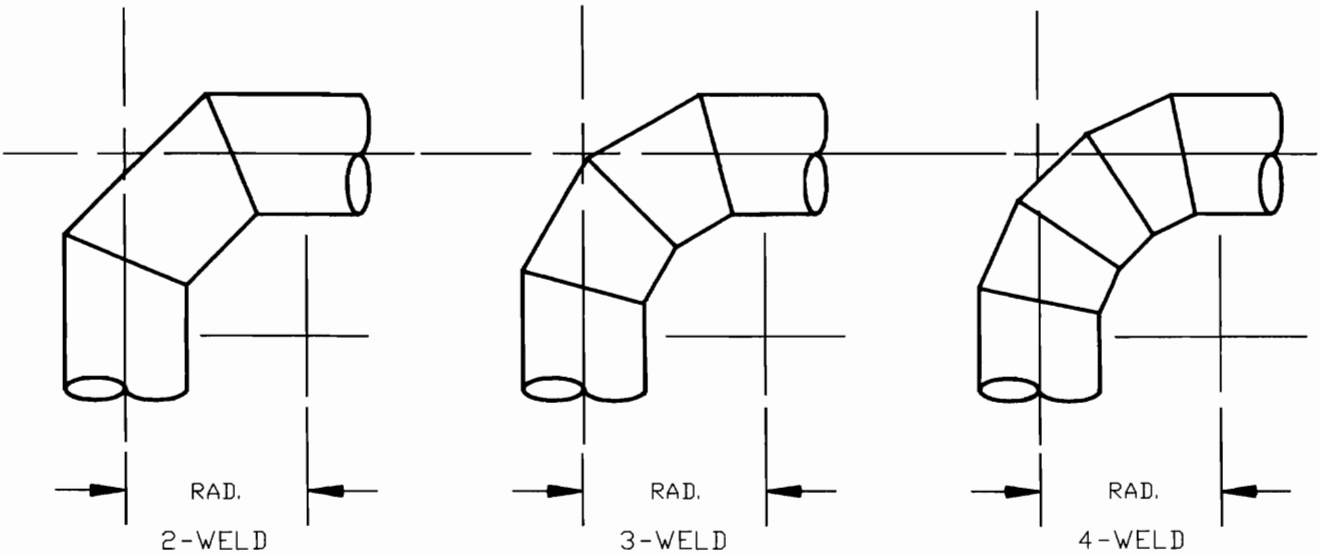

Figure 3-11. Mitered elbows.

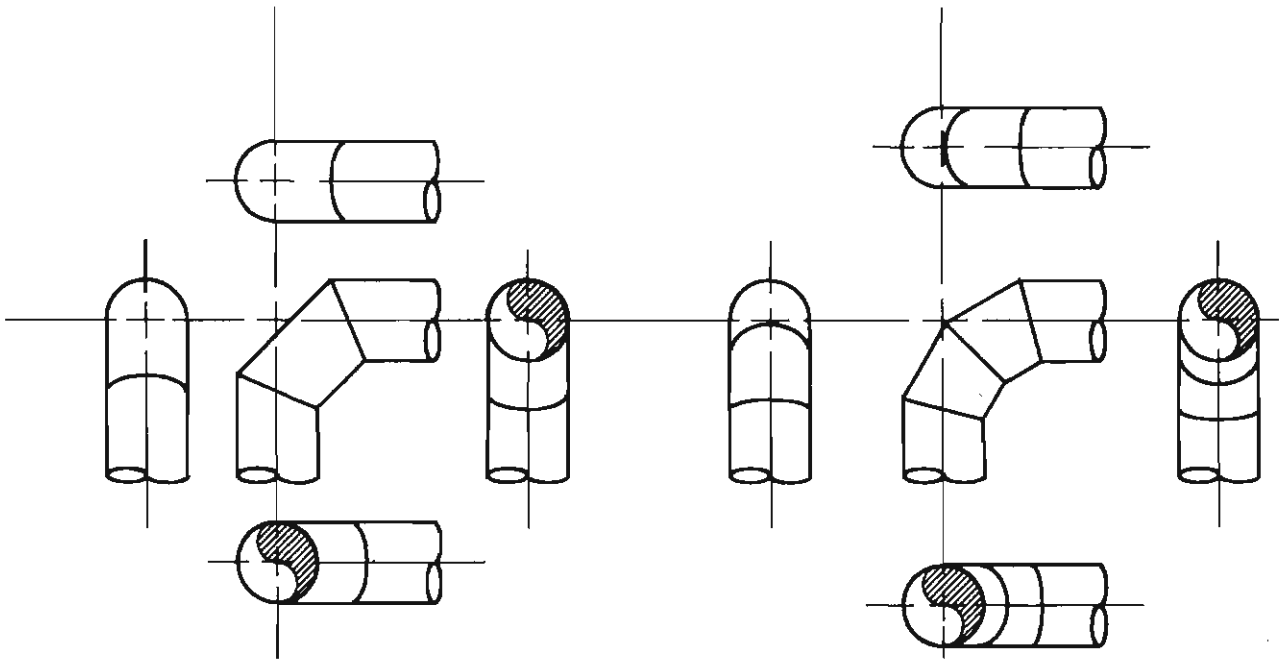

Two-weld miter

Three-weld miter

Figure 3-12. Miter elbows drafting symbols.

45° ELBOWS

Another important fitting is the 45° elbow. This elbow is also used to make changes in direction within the piping system. The obvious difference between the 90° and 45° elbows is the angle formed by the turn. Because the 45° elbow is one-half of a 90° elbow, as shown in Figure 3-13, it is obviously shorter.

Figure 3-13. 45° elbow.

It is logical, therefore, to assume a design using two 45° ells to make a directional change instead of two 90° elbows would result in considerable savings. These savings are not only related to the cost of the fittings but also to savings in the physical space needed to route the pipe. Figure 3-14 shows that two 14″ 90° elbows require 42″ to alter the course of a piping run. This is considerably more than the 17½″ needed by two 45° elbows.

Unlike the 90° ell, there is not a formula that can be applied to establish the center-to-end dimension of the 45° ell. Simply dividing the length of the 90° elbow by two will not work. The dimension of this fitting must be found on the Welded Fitting-Flange Chart (see Figure 3-15).

Drafting Symbols for the 45° Elbow

The drafting symbols for the 45° elbow are shown in Figure 3-16.

Drawing the 45° Elbow

Three step-by-step methods will be presented for constructing the 45° elbow. Figures 3-17 and 3-18 describe two manual methods for constructing the elbow. Figure 3-19 defines steps using **AutoCAD** commands to draw the elbow.

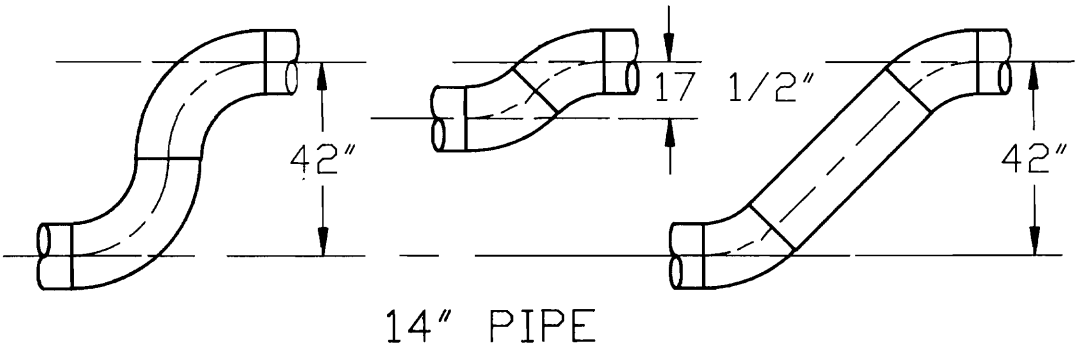

Figure 3-14. 90° ell versus 45° ell.

	NOMINAL PIPE SIZES INCHES		2"	3"	4"	6"	8"	10"	12"	14"
B B	O.D. of PIPE		$2\frac{3}{8}$	$3\frac{1}{2}$	$4\frac{1}{2}$	$6\frac{5}{8}$	$8\frac{5}{8}$	$10\frac{3}{4}$	$12\frac{3}{4}$	14
	45°L.R. ELL	B	$1\frac{3}{8}$	2	$2\frac{1}{2}$	$3\frac{3}{4}$	5	$6\frac{1}{4}$	$7\frac{1}{2}$	$8\frac{3}{4}$

Figure 3-15. Welded Fittings-Flanges Chart.

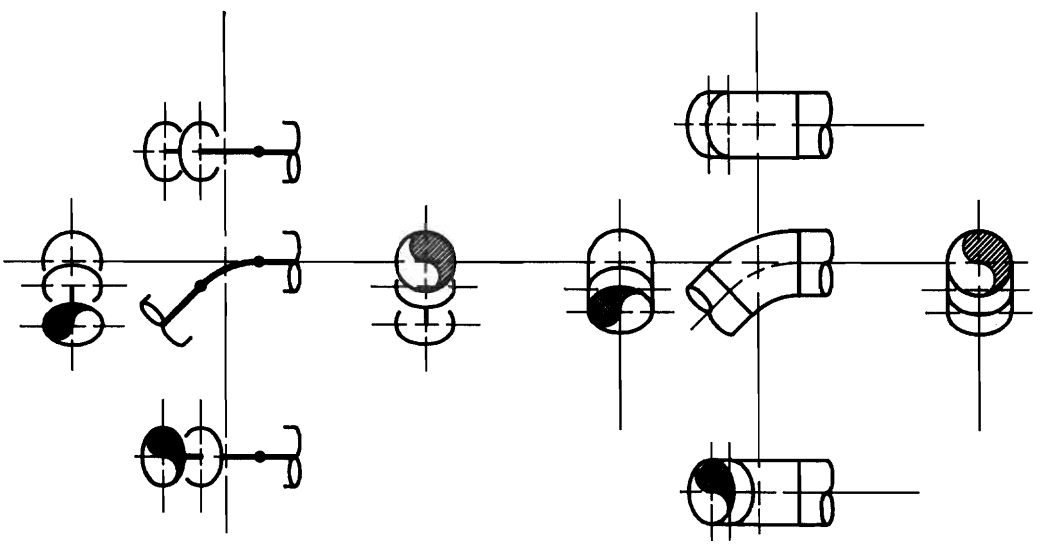

Single line: 12″ and smaller

Double line: 14″ and larger

Figure 3-16. 45° elbow.

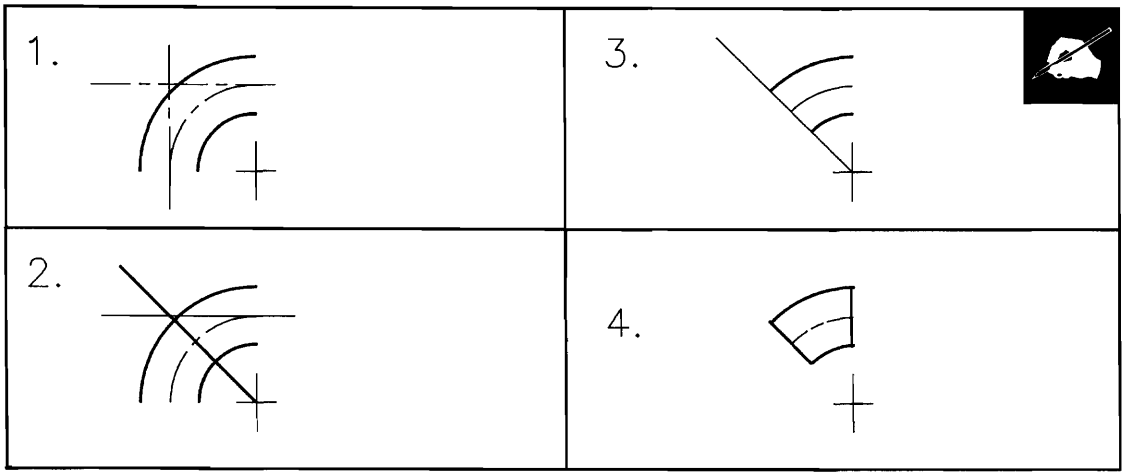

Figure 3-17. 45° elbow. Manual drafting solutions.

Step 1. Using construction lines, duplicate the procedure used to draw the 90° long-radius elbow.

Step 2. From the centerpoint used to construct the arcs, draw a 45° angle line that will cut the elbow in half.

Step 3. Erase the half of the 90° elbow that is not needed.

Step 4. Draw and darken the ends of the elbow. Darken the arcs.

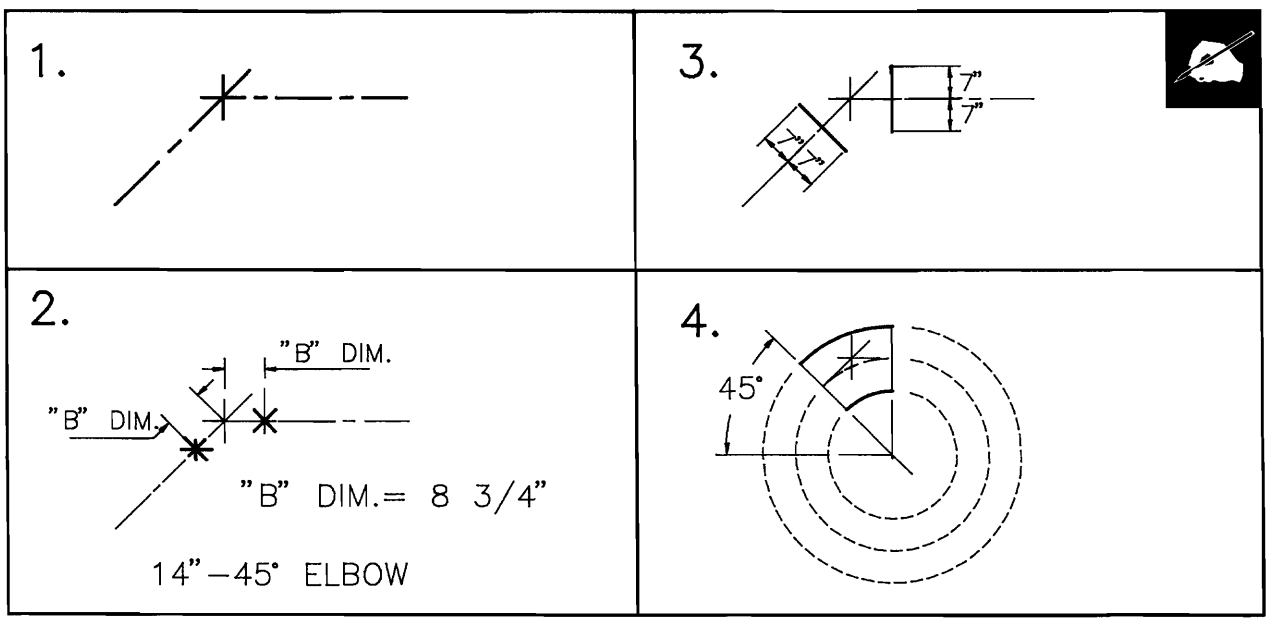

Figure 3-18. 14"-45° elbow. Alternative manual solution.

Step 1. Draw intersecting 45° construction lines as shown.

Step 2. Using the ***B*** dimension for a 14"-45° elbow from the Welded Fittings-Flanges Chart, mark off this length along each construction line beginning at the point of intersection.

Step 3. Determine one-half of the pipe's diameter and mark this distance on each side of each construction line. This will establish the OD of the pipe.

Step 4. Use a circle template to draw the inside and outside arcs representing the elbow. Draw an arc to represent the elbow's centerline.

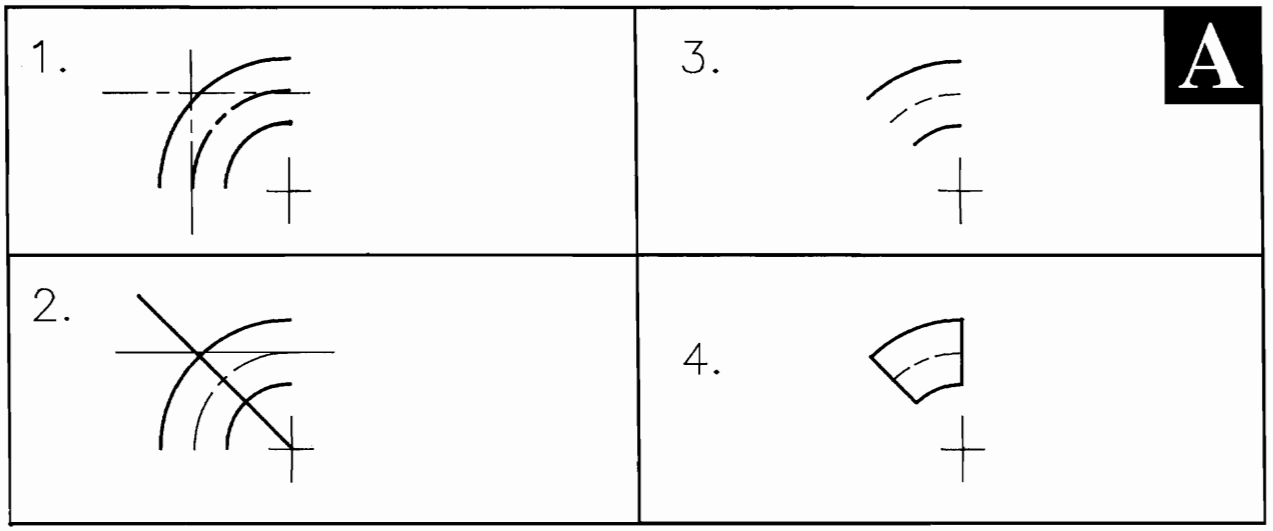

Figure 3-19. 45° elbow. **AutoCAD** commands.

Step 1. Duplicate the procedure used to construct the 90° long-radius elbow.

Step 2. Use polar coordinates to draw a 45° **LINE**, from the *center* of the circles to the outer circle, i.e., @ 28 <135.

Step 3. **TRIM** the elbow below the 45° line. **ERASE** the two construction lines.

Step 4. Use **LINE** to draw the two ends of the elbow.

90° Elbows Rolled at 45°

Many times to avoid using two 90° elbows in succession, designers will use one 90° ell and a 45° ell welded together (see Figure 3-20). In some orthographic views, these elbows will appear at an angle to our line of sight. In those views where the open end of the elbow appears at an angle to our line of sight, ellipses must be used to represent the end of the fittings. Figure 3-21 shows the orthographic views of 90° ells rolled at a 45° angle.

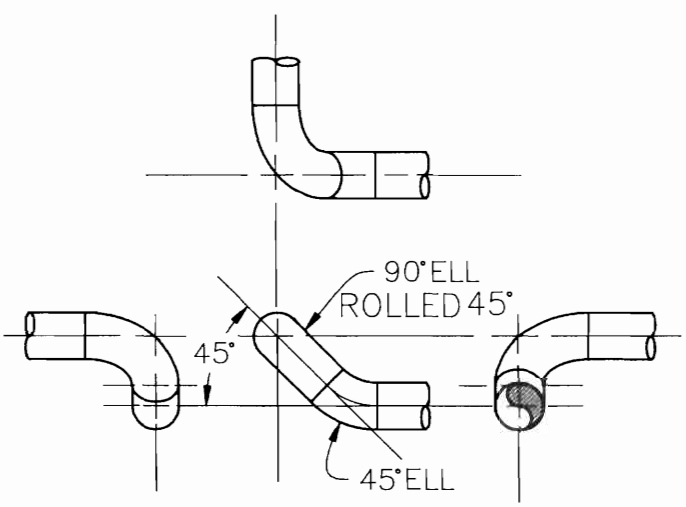

Figure 3-20. 90° and 45° elbows welded together.

Figure 3-22 illustrates the use of 45° ellipses to draw the 90° elbow rolled at a 45° angle. If the 90° elbow is rolled at 30° or 60°, simply use that degree ellipse to layout and construct the elbows.

WELD TEE

The name of this fitting comes from its resemblance to the letter **T**. It is a three-way fitting used to make perpendicular connections to a pipe (see Figure 3-23). Lines that connect to the main run of pipe are known as *branches*. The main run of pipe is often called the *header*. Figure 3-24 shows a pipe header with two branch connections.

Drafting Symbols for the Weld Tee

Notice that the weld tee requires three welds be made to install the fitting. Two types of tees are used in the piping industry:

- Straight—all three outlets are the same pipe size.
- Reducing—branch outlet is a smaller pipe size.

Figure 3-25 shows the drawing symbols for straight and reducing tees. A callout is required on the reducing tee to identify the header and branch sizes. The header size is shown first.

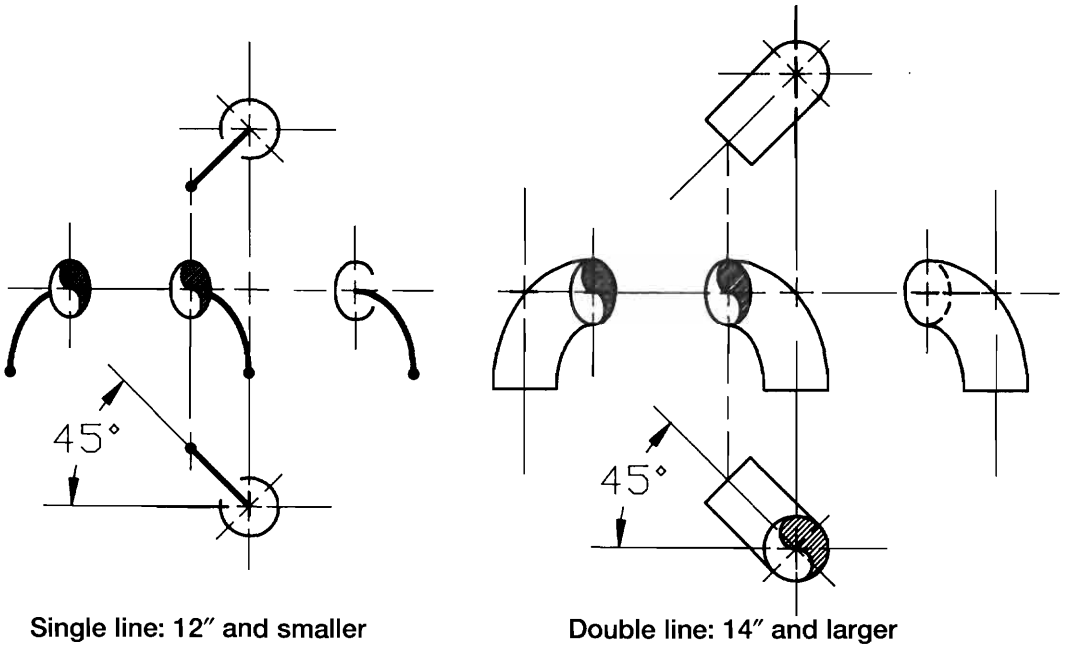

Figure 3-21. Orthographic views of 90° rolled at a 45° angle.

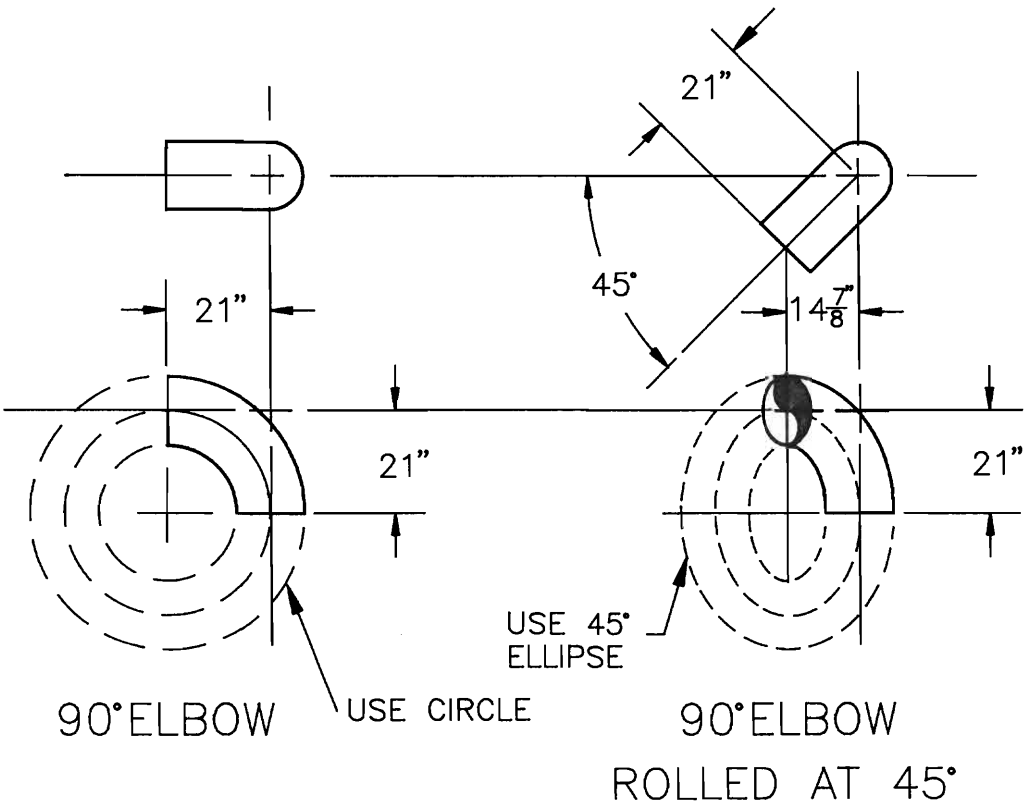

Figure 3-22. Constructing the 90° elbow rolled at 45°.

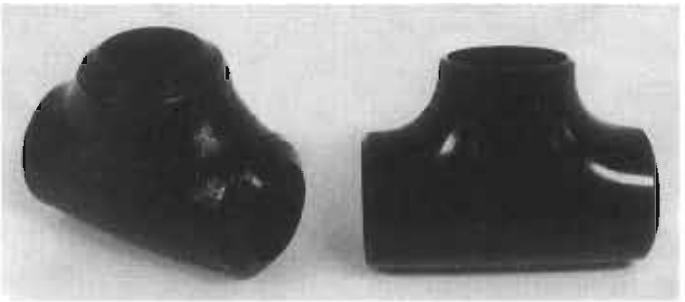

Figure 3-23. Weld tee.

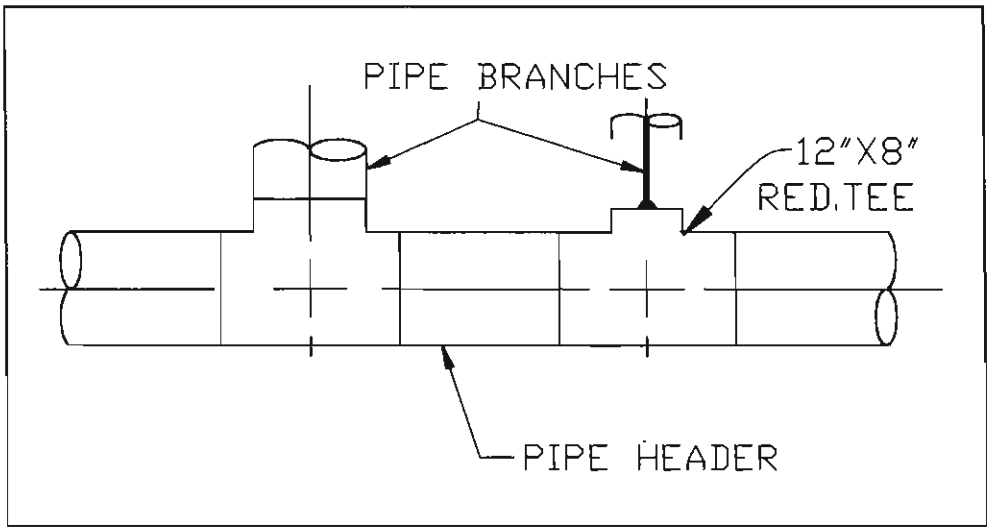

Figure 3-24. Header and branch connections.

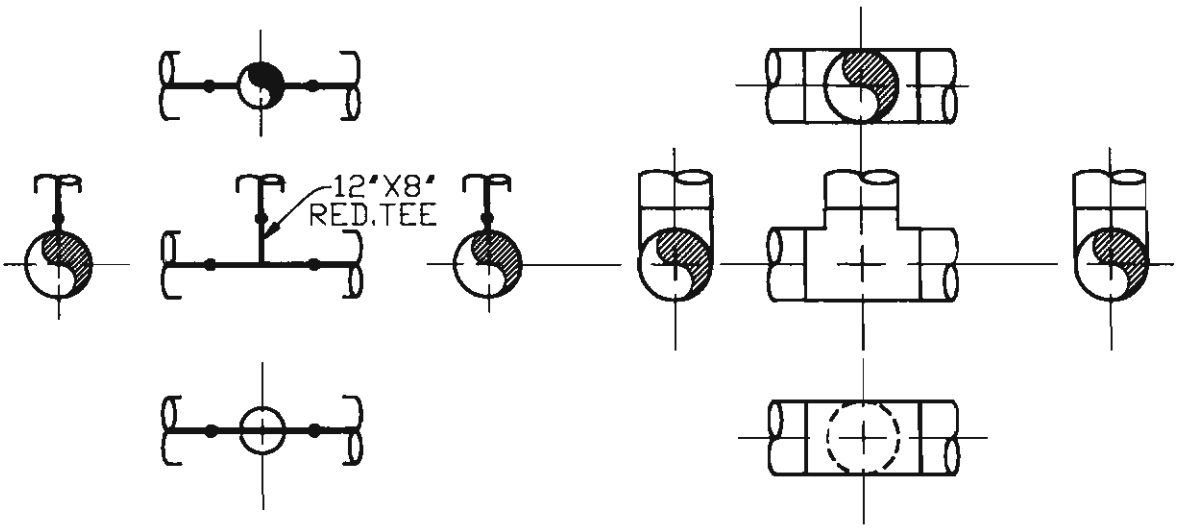

Single line: 12″ and smaller

Double line: 14″ and larger

Figure 3-25. Weld tee symbols.

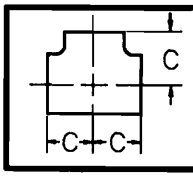

NOMINAL PIPE SIZES INCHES		2"	3"	4"	6"	8"	10"	12"	14"
O.D. of PIPE		$2\frac{3}{8}$	$3\frac{1}{2}$	$4\frac{1}{2}$	$6\frac{5}{8}$	$8\frac{5}{8}$	$10\frac{3}{4}$	$12\frac{3}{4}$	14
HALF TEE	C	$2\frac{1}{2}$	$3\frac{3}{8}$	$4\frac{1}{8}$	$5\frac{5}{8}$	7	$8\frac{1}{2}$	10	11

Figure 3-26. Welded Fittings-Flanges Chart.

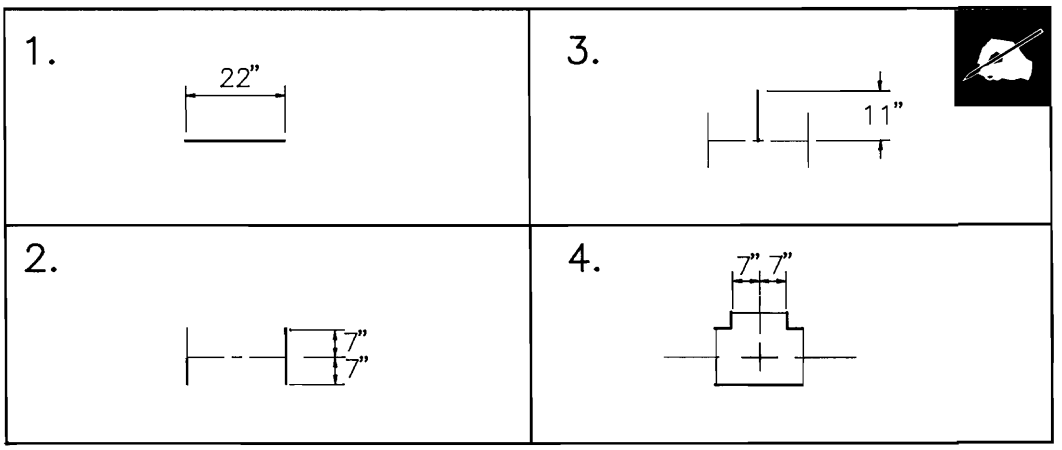

Figure 3-27. 14″ butt-welded straight tee. Manual drafting solutions.

Step 1. Using the **11″** ***C*** dimension found on the chart, draw a centerline 22″ long (11″ x 2 = 22″).

Step 2. Measure 7″ (one-half the header pipe size) on either side of the centerline to draw the sides of the tee.

Step 3. From the center of the tee, draw a perpendicular line, either up or down, depending on the direction of the branch, the length of *C*.

Step 4. Measure 7″ (one-half the branch pipe size) on either side of the perpendicular line to draw the branch of the tee. Draw and darken the sides and weld lines of the tee.

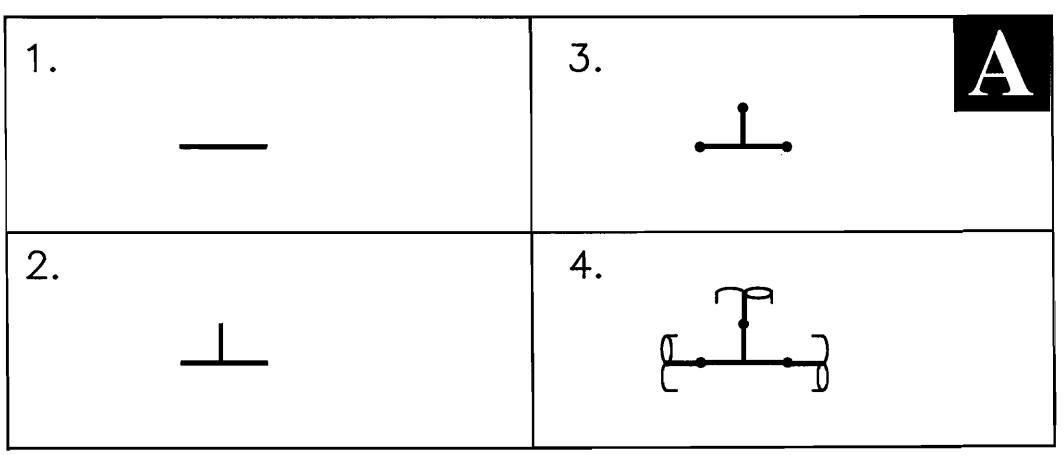

Figure 3-28. 10″ butt-welded straight tee. **AutoCAD** commands.

Drawing set-up. Set **LINETYPE** to *Continuous.*

Set **LIMITS:** lower left-0,0; upper right-36,36.

ZOOM, *All.*

Step 1. Draw a **PLINE,** with a width of .56″ (9⁄16″) for full scale or .0175″ for 3⁄8″ = 1′-0″ scale, 17″ long, to the right, from 12,12.

Step 2. From the *MIDpoint*, draw a **PLINE** 8½″ long, up, to form the branch.

Step 3. Using **OSNAP,** *ENDpoint*, place a **DONUT** at each end of the fitting. If drawing full scale, the donut is 0.0″ ID and 1.75″ OD. When drawing to 3⁄8″ =1′-0″ scale, the donut is 0.0″ ID and .05″ OD.

Step 4. Add break symbols. **ZOOM,** *Extents.*

Drawing the Weld Tee

Prior to drawing the weld tee, two dimensions must be found. These dimensions are required to determine the center-to-end length of the header and the length of the branch end. If a straight tee is being used, the ***C*** dimension found on the Welded Fittings-Flanges Chart in Figure 3-26 must be added twice to find the total length of the fitting. On a straight tee, the ***C*** dimension is also used as the length of the branch end. If a reducing tee is being drawn, the ***M*** dimension must be substituted as the length of the branch end. The ***M*** dimension is found on the Taylor Forge Seamless Welding Fittings Chart in Appendix A. Figures 3-27 and 3-28 provide the manual and AutoCAD steps for drawing the tee.

THE STUB-IN

Another method of making a branch connection is called a *stub-in*. The stub-in is most commonly used as an alternative to the reducing tee. The stub-in is not an actual fitting but rather a description of how the branch connection is created. A hole is bored into the header pipe, either the size of the OD or ID of the branch, and the branch is then stubbed into it. The two pipes are fitted together and then welded. Although the branch connection can be the same pipe size or smaller as the header, it cannot be larger. Figure 3-29 depicts the attachment of a stub-in. Figure 3-30 provides the single-line and double-line drawing symbols for a stub-in.

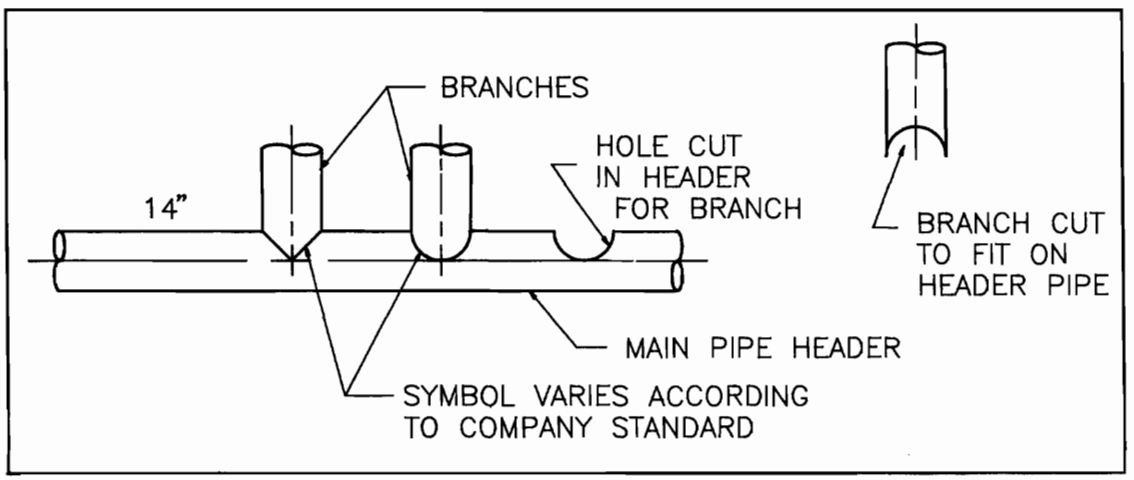

Figure 3-29. Stub-in connections.

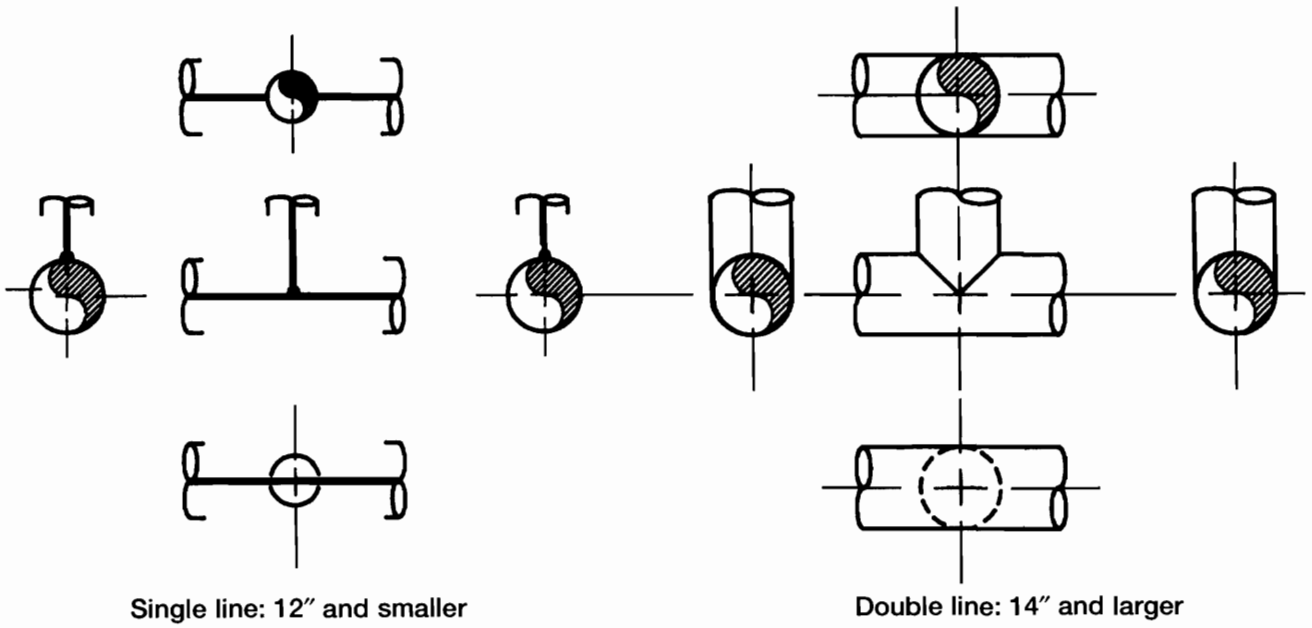

Figure 3-30. Stub-in symbols.

How close stub-ins are made is an important consideration. A general rule is to allow a minimum of 3″ between welds. This means a minimum of 3″ should be allowed between the outsides of branches made from a common header, and a header should be attached no closer than 3″ to a fitting. Figure 3-31 provides the minimum measurements allowed between branches and fittings on an 18″ header.

Stub-in Reinforcements

Even though the use of the stub-in is limited by the pressure, temperature, and commodity within a pipe, its use is becoming increasingly more popular. Its chief advantage over the tee is cost. Not only can the cost of purchasing a fitting be avoided, but the stub-in requires only one weld; whereas, the tee requires three. When internal conditions such as pressure or temperature of the commodity or external forces such as vibrations or pulsations are placed on a stub-in, special reinforcement may be necessary to prevent the branch from separating from the header. Three reinforcing alternatives are listed below.

- **Reinforcing pad.** Resembling a metal washer that has been bent to conform to the curvature of the pipe, the reinforcing pad is a ring cut from steel plate that has a hole in the center equal to the diameter of the branch connection. It is slipped onto the branch pipe then welded to both branch and header.
- **Welding saddle.** A purchased reinforcing pad, the welding saddle has a short neck designed to give additional support to the branch. Figure 3-32 shows drawing representations of reinforcing pads and saddles.
- **O-lets.** Purchased fittings, o-lets have one end shaped to the contour of the header and the other end manufactured to accept the type of end connections being used on the branch. Weldolets are manufactured for butt-weld fittings. Sockolets are made for socket-weld fittings. And threadolets are available for screwed fittings. Figure 3-33 shows a typical threadolet. Figure 3-34 gives drawing symbols for weldolets, sockolets, and threadolets.

Other o-lets are manufactured to be used to make connections at angles other than 90°. Figure 3-35 shows a latrolet and the elbolet.

COUPLING

Another type of fitting used to make branch connections is the coupling. Used primarily for connecting small-bore screwed and socket-weld pipe to large-bore pipe headers, the coupling is also used extensively where instrument connections are required. There are two common methods used to make branch connections with couplings:

1. The coupling rests on the external surface of the pipe header and is welded from the outside.
2. A hole is bored into the pipe header large enough to accept the OD of the coupling. The coupling is inserted into the hole and is then welded. Figure 3-36 shows the coupling in use.

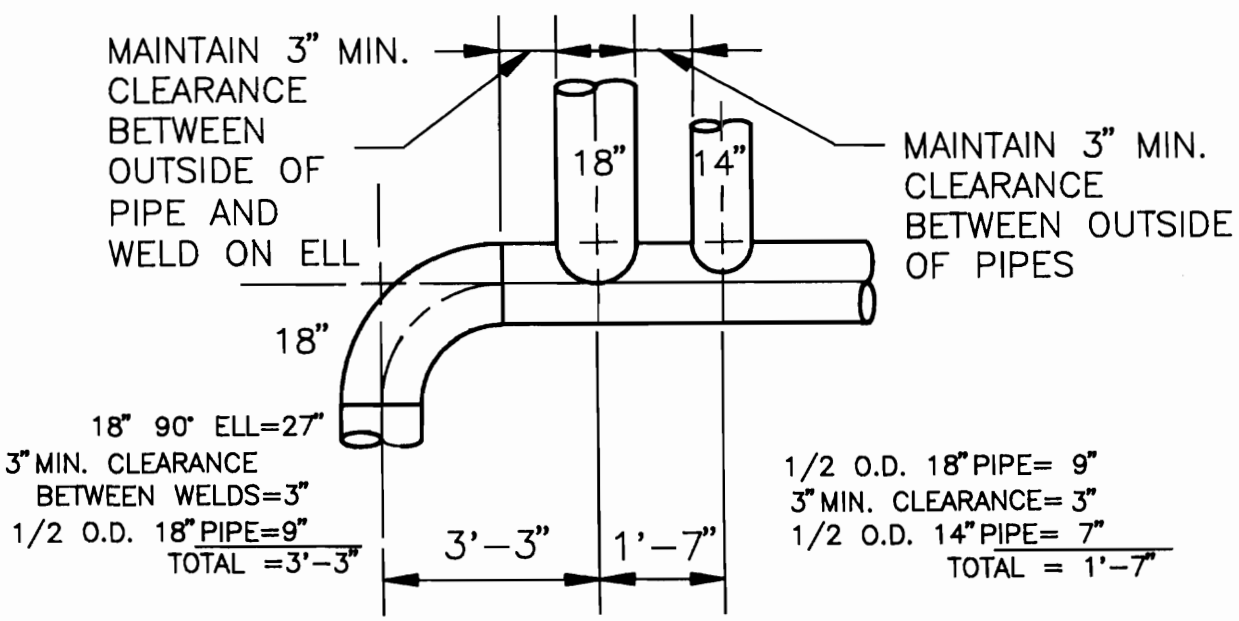

Figure 3-31. Welding minimums for stub-ins.

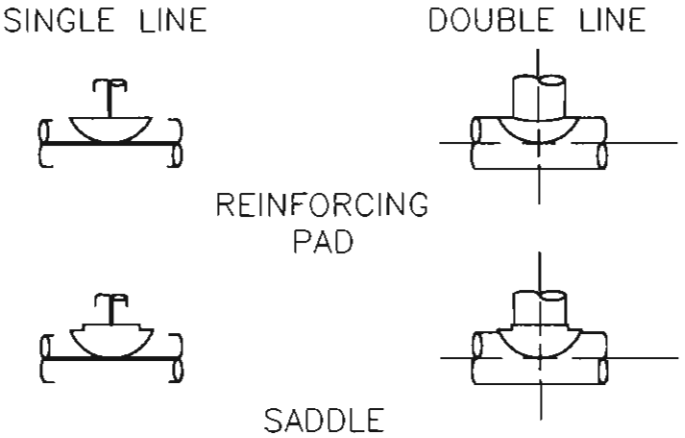

Figure 3-32. Reinforcing pads and saddles.

Figure 3-33. Threadolet.

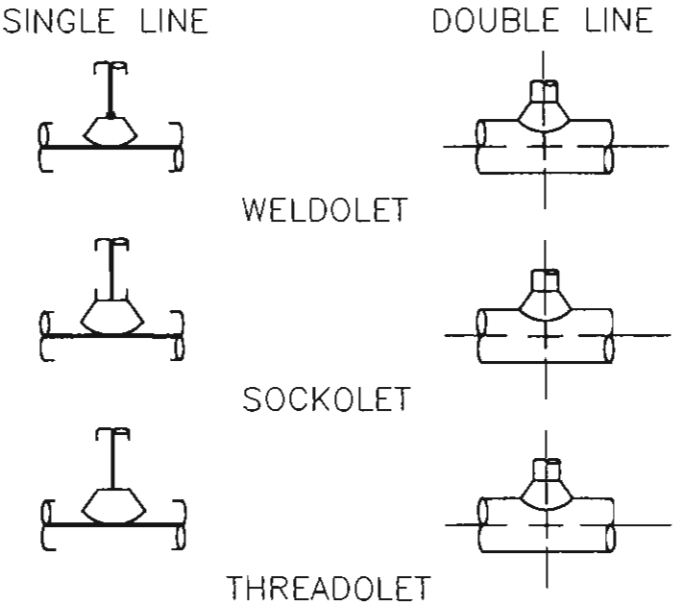

Figure 3-34. O-lets.

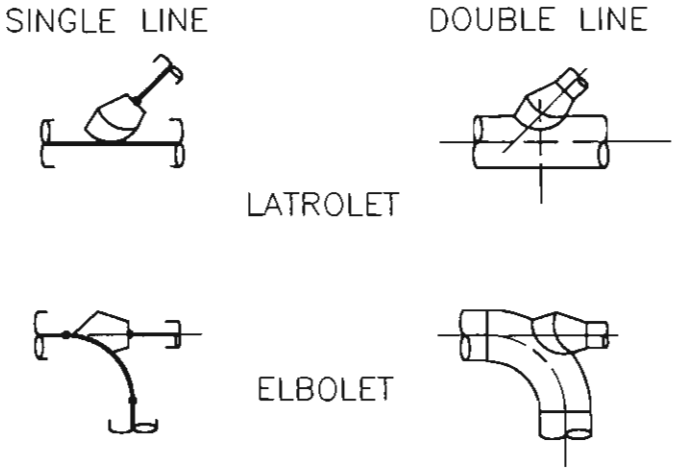

Figure 3-35. Latrolet and elbolet.

REDUCERS

When the piping designer wants to reduce the diameter of a straight run of pipe, a reducing fitting must be used. Appropriately named, the reducer is available in two styles as shown in Figure 3-37.

Concentric—having a common centerline.
Eccentric—having offset centerlines.

The concentric reducer maintains the same centerline at both the large and small ends of the fitting.

The eccentric reducer has offset centerlines that will maintain a flat side on the top or the bottom of the fitting, depending on how the fitting is rolled prior to welding. The eccentric reducer is used in piperacks to maintain a constant bottom of pipe (BOP). Because pipe supports within a piperack are of the same elevation, a pipe must have a consistent bottom of pipe elevation so it can rest on each support throughout its entire length. Using a concentric reducer in a piperack would not permit the small diameter end of the pipe run to rest on a pipe support.

Eccentric reducers are also used on pump suction nozzles to keep entrained air from entering the pump. By keeping a flat on top (FOT) surface, vapor pockets can be eliminated. Figure 3-38 shows the centerlines of the eccentric reducer in its FOT and FOB orientations.

It is important that a designer not forget to include the dimensional difference between the two centerlines of an

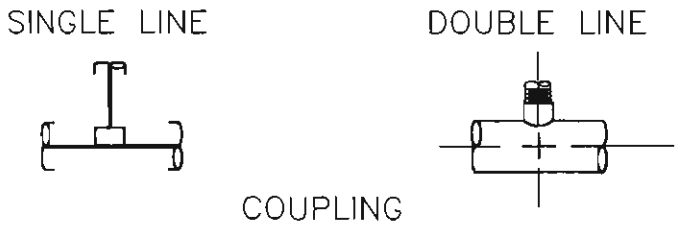

Figure 3-36. Couplings as branches.

Figure 3-37. Eccentric and concentric reducer.

eccentric reducer when calculating the elevations of pipe in a piperack. The formula for calculating this difference is

$$Offset = \text{Large ID} - \text{small ID} / 2$$

A quicker, though less accurate method, is to take one-half the difference between the two outside diameters.

Drafting Symbols for the Concentric and Eccentric Reducer

The orthographic views for the concentric and eccentric reducers are shown in Figure 3-39. No matter the size of the reducer, it is always drawn as a double-line symbol. Notice the callouts that must be included with the eccentric reducer. The large end is always listed first, no matter the direction of flow, and the flat side must be indicated.

Drawing the Reducers

Prior to drawing the reducer, the length of the fitting must be found on the Welded Fittings-Flanges Chart (see Figure 3-40). The **H** dimension will provide the end-to-end length for either the concentric or eccentric reducer. Always use the **H** dimension of the large end to determine the fitting length.

Figures 3-41 and 3-42 provide the manual and **AutoCAD** steps for drawing the reducer.

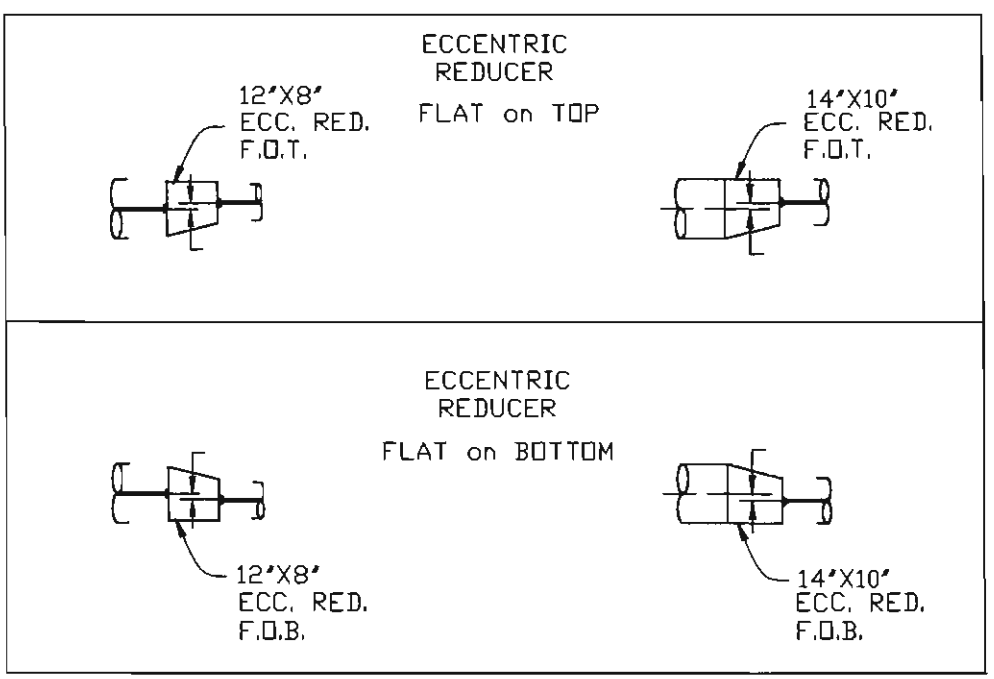

Figure 3-38. Eccentric reducers.

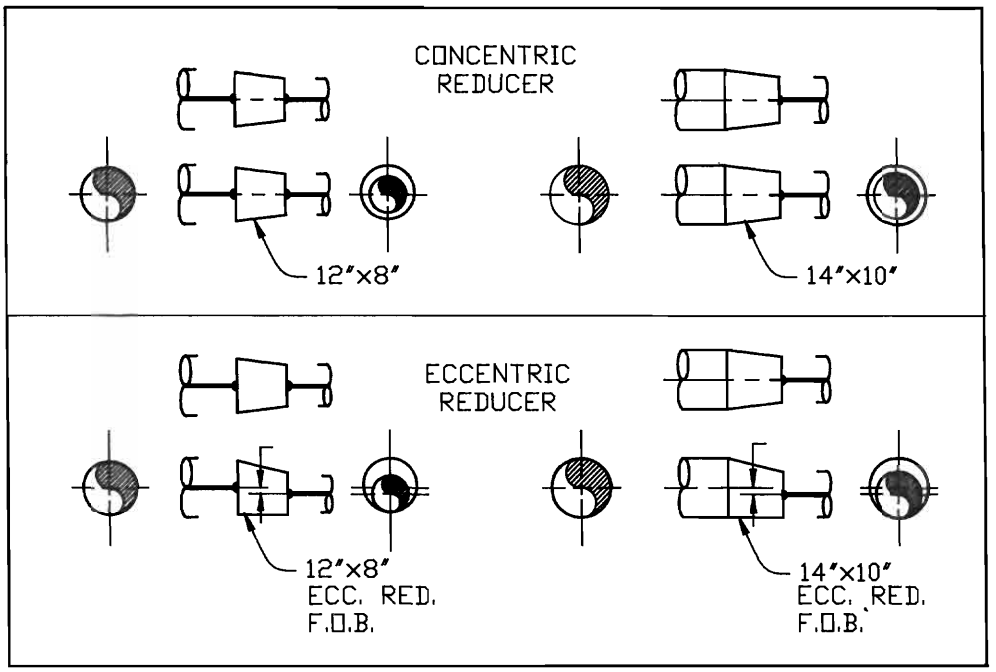

Figure 3-39. Concentric and eccentric drawing symbols.

	NOMINAL PIPE SIZES INCHES		2"	3"	4"	6"	8"	10"	12"	14"
	O.D. of PIPE		$2\frac{3}{8}$	$3\frac{1}{2}$	$4\frac{1}{2}$	$6\frac{5}{8}$	$8\frac{5}{8}$	$10\frac{3}{4}$	$12\frac{3}{4}$	14
H	REDUCER	H	3	$3\frac{1}{2}$	4	$5\frac{1}{2}$	6	7	8	13

Figure 3-40. Welded Fittings-Flanges Chart.

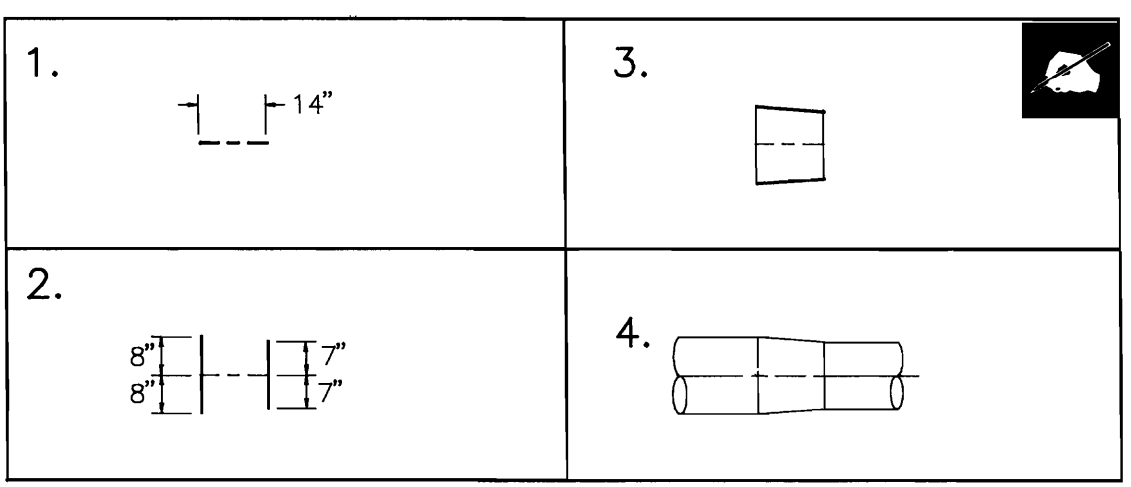

Figure 3-41. 16" × 14" concentric reducer. Manual drafting solutions.

Step 1. Using the ***H*** dimension found on the chart, draw a centerline 14" long.

Step 2. Measure 8"(one-half the large end size) on either side of the centerline on one end and 7" on either side of the centerline on the opposite end.

Step 3. Connect the opposite ends of the fitting by drawing lines from endpoint to endpoint.

Step 4. Darken the sides and weld lines of the reducer.

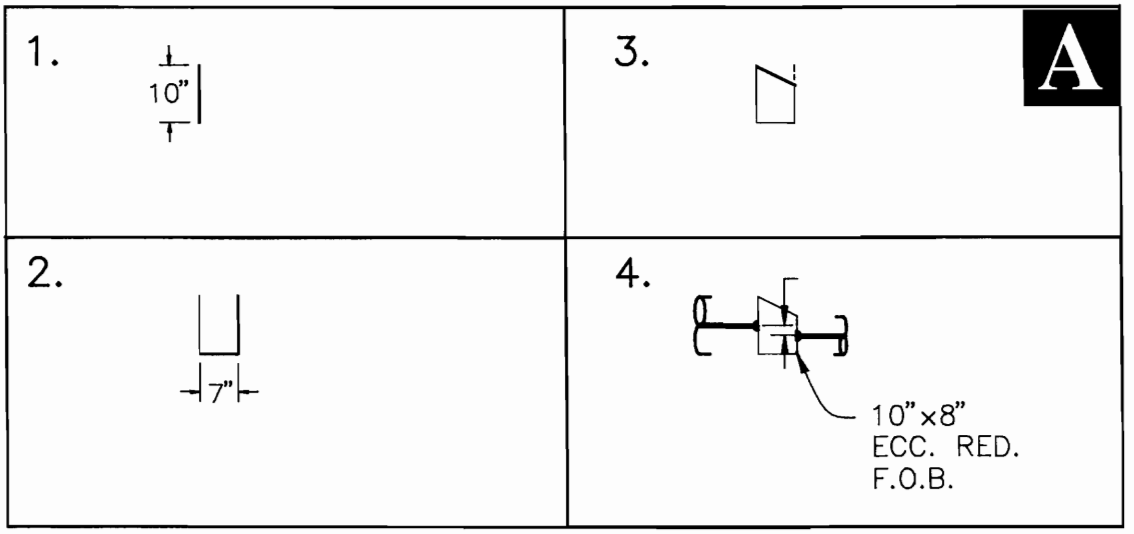

Figure 3-42. 10″ × 8″ eccentric reducer (FOB). **AutoCAD** commands.

Drawing set-up. Set **LINETYPE** to *Continuous.*

Set **LIMITS:** lower left—0,0; upper right—20,20.

ZOOM, *All.*

Step 1. Draw a vertical **PLINE** with a width of .56″ (9/16″) for full scale or .0175″ for 3/8″ =1′-0″ scale, 10″ tall from 10,10.

Step 2. OFFSET this line 7″ to the right. Draw a **PLINE** 7″ long from 10,10 to 17,10 connecting the bottoms of the two lines.

Step 3. Draw a **PLINE** from 10,20 to 17,18. **TRIM** the top of the right line to complete the symbol.

ZOOM, *Extents.*

Step 4. If necessary, draw a **PLINE** having a width of .0175″, from the **MIDpoint** of each vertical line outward to represent pipe. Place note as required.

WELD CAP

The last weld fitting we will discuss is the weld cap. It is used to seal an open end of pipe. When dimensioning the positional location of a weld cap on a drawing, indicate only the length of the run of pipe. The cap will be welded to the end and need not be included in the length dimension of the run of pipe.

The weld cap is another fitting that is drawn as a double-line symbol for all sizes of pipe.

The length of the fitting is found on the Taylor Forge Seamless Welding Fittings Chart in Appendix A.

When representing the cap on a drawing, use an ellipse to construct the round end of the fitting. Figure 3-43 shows the single-line and double-line drawing symbols for a weld cap. Notice the weld dot on the single line symbol is drawn as a half circle only.

USE OF FITTINGS

Thus far, we have discussed each fitting individually. We will now look at how each fitting relates to other fittings when used in the design of various piping systems. Depending on the given situation, fittings will either be welded to each other or separated by lengths of pipe. Welding one fitting directly to another is called *fitting-make-up* (see the examples in Figure 3-44).

Most situations involving the erection of the piping system require the designer to use pipe of various lengths between the fittings. In these cases, pipe is cut to the required length and the ends are beveled in preparation for welding to the fittings. When fittings are not assembled as fitting make-up and are separated by a piece of pipe, most companies stipulate the pipe must be at least one pipe diameter (nominal size) in length with a 3″ minimum spacing for pipe 6″ and smaller. By maintaining this minimum spacing between welds, a pipe can conveniently be cut, beveled, and welded without interference (see Figure 3-45). The 3″ minimum spacing is a standard used throughout the piping industry and will be applied to the drawing exercises and projects in this text.

Welds may seem insignificant to the designer, but, it goes without saying, a piping facility could not be built without them. Remember, all welds must be shown on drawings. Use weld dots on single-line pipe symbols and weld lines on double-line pipe symbols.

Dimensioning of Fitting Make-Up

The next step in the drawing of pipe is the calculation and placement of dimensions. At the present time, we are only concerned with butt-weld fittings. The general rules-of-thumb for placing dimensions on a drawing are as follows:

- Pipe should be dimensioned from center of fitting to center of fitting, or
- Pipe should be dimensioned from center of fitting to the end of pipe.

Figure 3-46 provides some examples for placing dimensions on drawings.

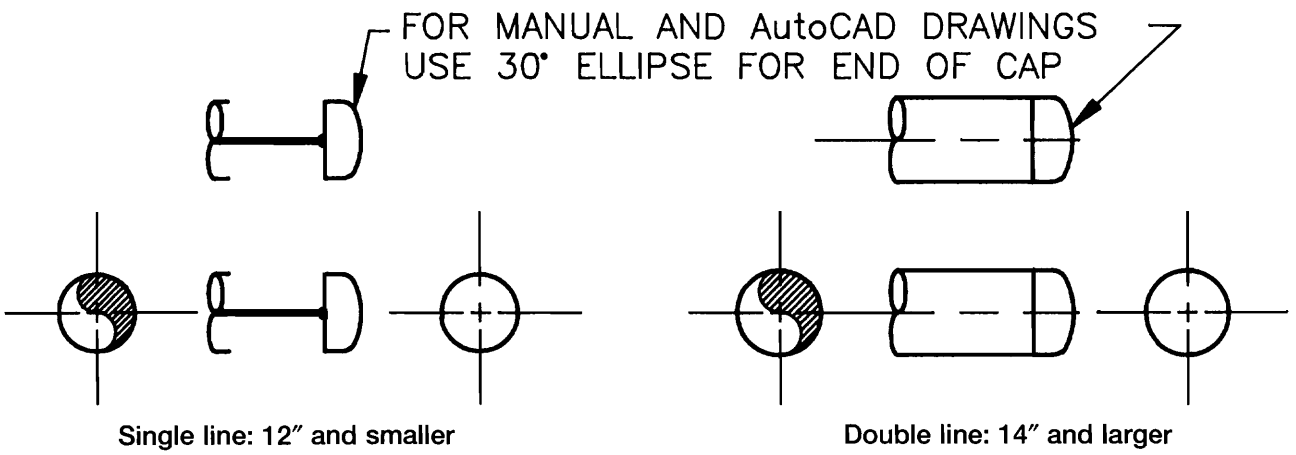

Figure 3-43. Weld cap drawing symbols.

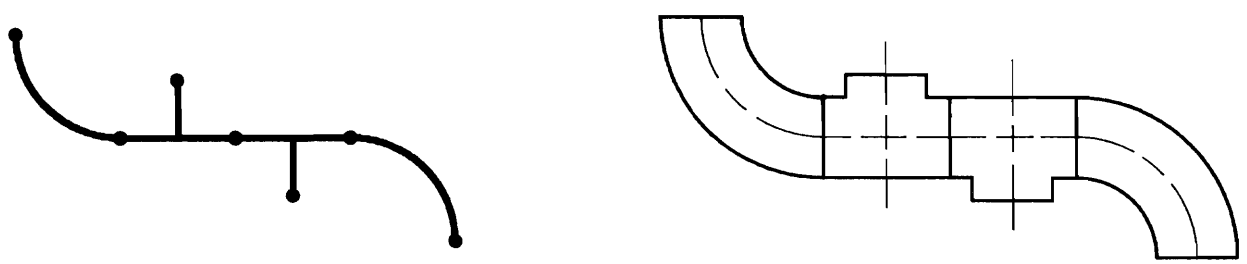

Figure 3-44. Fitting make-up.

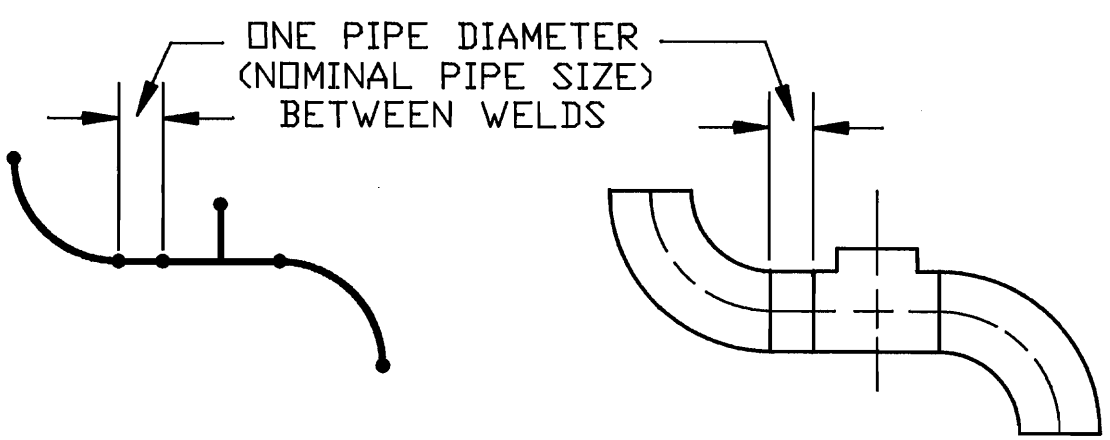

Figure 3-45. Minimum pipe lengths.

SCREWED AND SOCKET-WELD FITTINGS

Screwed and socket-weld fittings perform the same basic functions as butt-weld fittings. There are, however, a few differences that must be examined. Screwed and socket-weld fittings are normally reserved for installations using fittings 3″ and smaller. Screwed and socket-weld fittings are also available in cast iron, malleable iron, or forged steel. Cast iron and malleable iron fittings are typically used on low pressure and temperature lines such as air, water, or condensate.

Lines containing high pressure and temperature commodities, which are subject to movement and vibration, require fittings made of forged steel. Forged steel screwed and socket-weld fittings are manufactured in two pressure classes—3000# and 6000#. Dimensional charts for screwed and socket-weld fittings are provided in Appendix A. These dimensioning charts supply measurements for 3000# and 6000# fittings. Figures 3-47 and 3-48 provide a sample of the dimension charts for screwed and socket-weld fittings found in Appendix A.

Most screwed fittings are manufactured with internal, female threads per American Standard and API thread guidelines (see Figure 3-49). Some fittings, such as plugs and swages, however, are manufactured with external threads.

The socket-weld fitting is replacing the screwed fitting as the choice of many fabricators because it offers greater strength. Even though screwed fittings can be seal welded if necessary, strength of the fitting is decreased when the threads are cut during the manufacturing process. Socket-weld fittings can be easily fitted and welded without the need of special clamps or tack-welds, which are often required to hold a butt-weld fitting in place before the final weld is made (see Figure 3-50).

Fittings

Like butt-weld fittings, screwed and socket-weld fittings are used to make similar configurations in a piping system. Screwed and socket-weld fittings differ in size and shape, but they achieve the same purpose as the butt-weld fittings. Figure 3-51 provides examples of some screwed and socket-weld fittings.

Screwed and socket-weld fittings are drawn with square corners using short hash marks to represent the ends of the fitting (see Figure 3-52).

Unions

The union, shown in Figure 3-53, is a fitting placed within a piping configuration that will allow the assembly to be disassembled for inspection, repair, or replacement. Manufactured for screwed and socket-weld applications, the union is represented on drawings as shown in Figure 3-54.

Unions should be positioned in locations that will facilitate the easy removal of critical pieces of equipment. Figure 3-55 shows how unions are placed in a configuration to allow easy removal of the valves.

Plug

The plug, like a cap, is designed to close off the end of a run of pipe. Plugs are manufactured for screwed fittings with male threads and are screwed into the end of a pipe to create a seal. Figure 3-56 shows the drawing symbols for the plug.

Coupling

Although this fitting is used in butt-welding applications as a branch connection, its primary use is to connect lengths of screwed and socket-weld pipe together. Some clients may stipulate, however, that all socket-weld pipe must be connected with a butt weld, rather than a coupling.

PIPE NIPPLES

By design, screwed and socket-weld fittings cannot be assembled by placing one fitting directly in contact with another fitting. Screwed fittings are manufactured with threads on the inside of the fitting, and socket-weld fittings have an internal socket that prevents fitting makeup assembly. To facilitate the assembly of screwed and socket-weld fittings, small lengths of pipe called *pipe nipples* are used between fittings. Pipe nipples can vary in length depending upon the distance required to fabricate the pipe configuration. A *close* nipple is one that provides the minimum length of pipe between fittings. Remember, screwed and socket-weld fittings have a certain amount of *lost* pipe due to thread engagement and socket depth. Therefore, each size pipe has a different minimum length for the dimension of a close nipple.

Many companies will use 3″ as the standard minimum for pipe nipples. This length will accommodate the amount of pipe lost inside the fitting on each end as well as provide sufficient wrench clearance during assembly for the larger screwed and socket-weld pipe sizes.

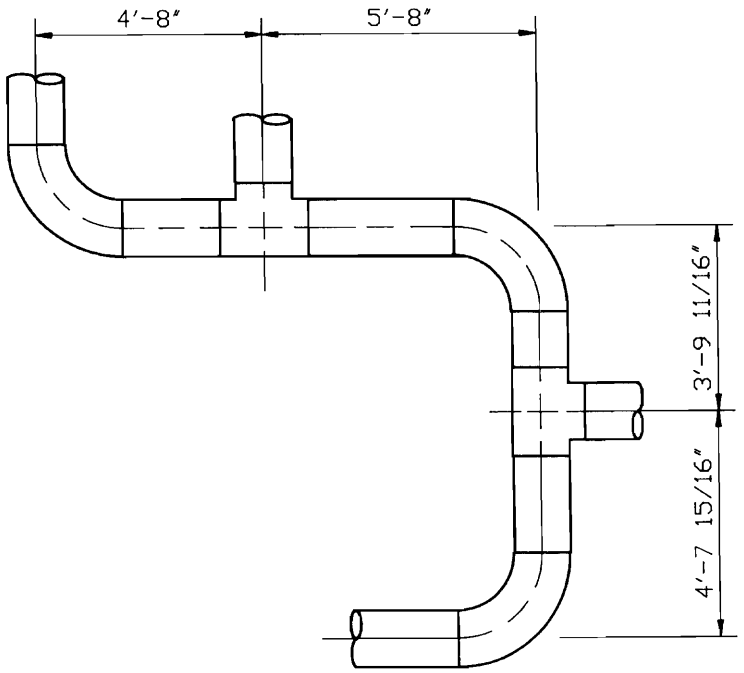

Figure 3-46. Placement of dimensions.

SCREWED FITTINGS										
NOMINAL PIPE SIZES (in)			1/2"	3/4"	1"	1 1/4"	1 1/2"	2"	2 1/2"	3"
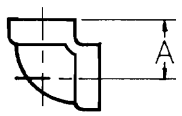	3000 # 90° ELL	A	1 5/16	1 1/2	1 3/4	2	2 3/8	2 1/2	3 3/8	3 3/4
	6000 #	A	1 1/2	1 3/4	2	2 3/8	2 1/2	3 3/8	3 3/4	4 3/16
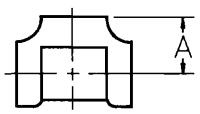	3000 # TEE	A	1 5/16	1 1/2	1 3/4	2	2 3/8	2 1/2	3 3/8	3 3/4
	6000 #	A	1 1/2	1 3/4	2	2 3/8	2 1/2	3 3/8	3 3/4	4 3/16
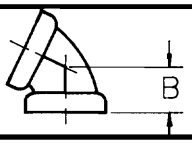	3000 # 45° ELL	B	1	1 1/8	1 5/16	1 7/16	1 11/16	2	2 1/16	2 1/2
	6000 #	B	1 1/8	1 5/16	1 11/32	1 11/16	1 23/32	2 1/16	2 1/2	3 1/8
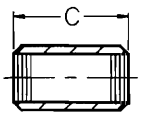	3000 # COUPLING	C	1 7/8	2	2 3/8	2 5/8	3 1/8	3 3/8	3 5/8	4 1/4
	6000 #	C	1 7/8	2	2 3/8	2 5/8	3 1/8	3 3/8	3 5/8	4 1/4
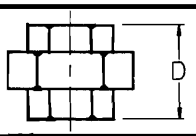	3000 # UNION	D	2 3/8	2 7/16	2 3/4	2 15/16	3 3/16	3 7/16	4 1/16	4 1/2
	6000 #	D	2 3/8	3 3/8	3 5/8	3 7/8	4 3/16	4 5/8		
NORMAL THREAD ENGAGEMENT	3000 #		1/2	9/16	11/16	11/16	11/16	3/4	15/16	1
	6000 #		1/2	9/16	11/16	11/16	11/16	3/4	15/16	1

Figure 3-47. Screwed fittings dimensioning chart.

SOCKET WELD FITTINGS										
NOMINAL PIPE SIZES (in)			$\frac{1}{2}$"	$\frac{3}{4}$"	1"	$1\frac{1}{4}$"	$1\frac{1}{2}$"	2"	$2\frac{1}{2}$"	3"
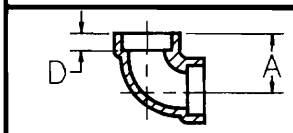	3000 # 90°ELL	A	$1\frac{1}{8}$	$1\frac{5}{16}$	$1\frac{1}{2}$	$1\frac{3}{4}$	2	$2\frac{3}{8}$	3	$3\frac{3}{8}$
	6000 #	A	$1\frac{5}{16}$	$1\frac{1}{2}$	$1\frac{3}{4}$	2	$2\frac{3}{8}$	$2\frac{1}{2}$	$3\frac{1}{4}$	$3\frac{3}{4}$
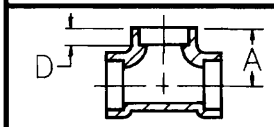	3000 # TEE	A	$1\frac{1}{8}$	$1\frac{5}{16}$	$1\frac{1}{2}$	$1\frac{3}{4}$	2	$2\frac{3}{8}$	3	$3\frac{3}{8}$
	6000 #	A	$1\frac{5}{16}$	$1\frac{1}{2}$	$1\frac{3}{4}$	2	$2\frac{3}{8}$	$2\frac{1}{2}$	$3\frac{1}{4}$	$3\frac{3}{4}$
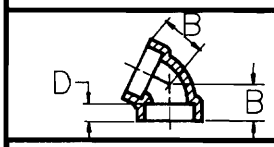	3000 # 45°ELL	B	$\frac{7}{8}$	1	$1\frac{1}{8}$	$1\frac{5}{16}$	$1\frac{7}{16}$	$1\frac{11}{16}$	$2\frac{1}{16}$	$2\frac{1}{2}$
	6000 #	B	1	$1\frac{1}{8}$	$1\frac{5}{16}$	$1\frac{11}{32}$	$1\frac{11}{16}$	$1\frac{23}{32}$	$2\frac{1}{16}$	$2\frac{1}{2}$
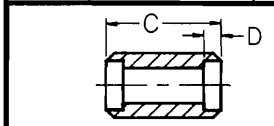	3000 # COUPLING	C	$1\frac{7}{8}$	2	$2\frac{3}{8}$	$2\frac{5}{8}$	$3\frac{1}{8}$	$3\frac{3}{8}$	$3\frac{5}{8}$	$4\frac{1}{4}$
	6000 #	C	$1\frac{7}{8}$	2	$2\frac{3}{8}$	$2\frac{5}{8}$	$3\frac{1}{8}$	$3\frac{3}{8}$	$3\frac{5}{8}$	$4\frac{1}{4}$
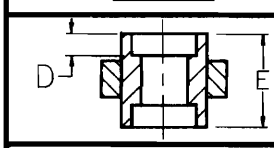	3000 # UNION	E	$1\frac{15}{16}$	$2\frac{1}{4}$	$2\frac{1}{2}$	$2\frac{13}{16}$	$3\frac{1}{16}$	$3\frac{7}{16}$	4	$4\frac{5}{16}$
	6000 #	E	$2\frac{5}{16}$	$2\frac{1}{2}$	$2\frac{13}{16}$	$2\frac{3}{4}$	$2\frac{7}{8}$	$3\frac{11}{16}$	$3\frac{15}{16}$	$4\frac{5}{8}$
SOCKET DEPTH	3000 #	D	$\frac{1}{2}$	$\frac{9}{16}$	$\frac{5}{8}$	$\frac{11}{16}$	$\frac{3}{4}$	$\frac{7}{8}$	$1\frac{3}{8}$	$1\frac{1}{8}$
	6000 #	D	$\frac{11}{16}$	$\frac{3}{4}$	$\frac{7}{8}$	$\frac{15}{16}$	$1\frac{1}{8}$	1	$1\frac{1}{2}$	$1\frac{5}{8}$

Figure 3-48. Socket-weld fittings dimensioning chart.

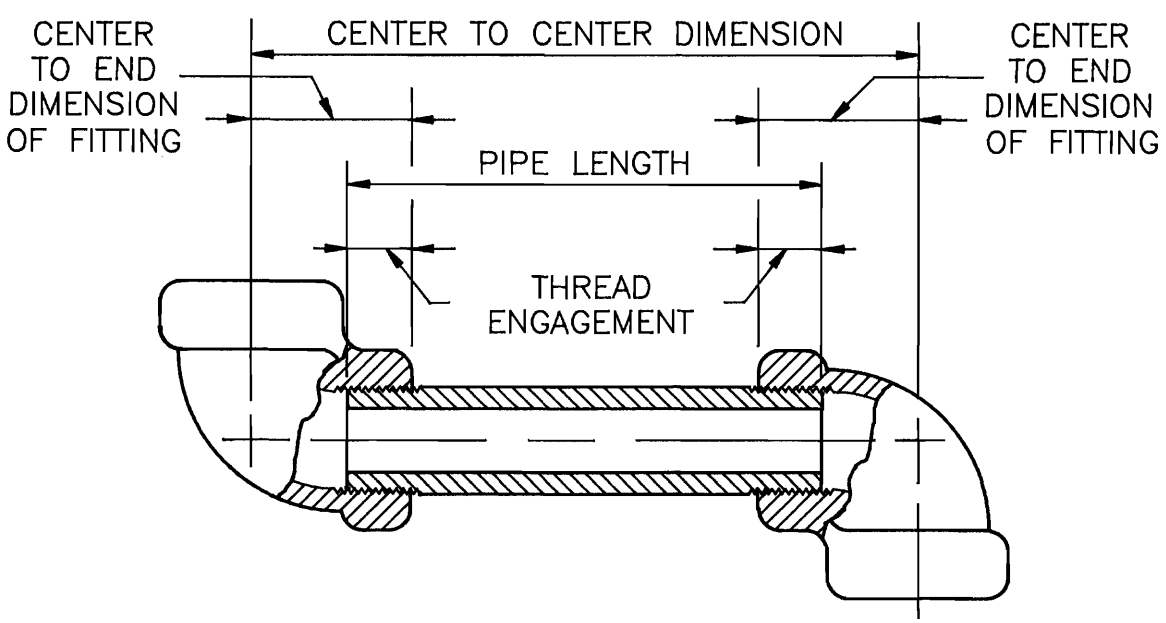

Figure 3-49. Internal and external threads.

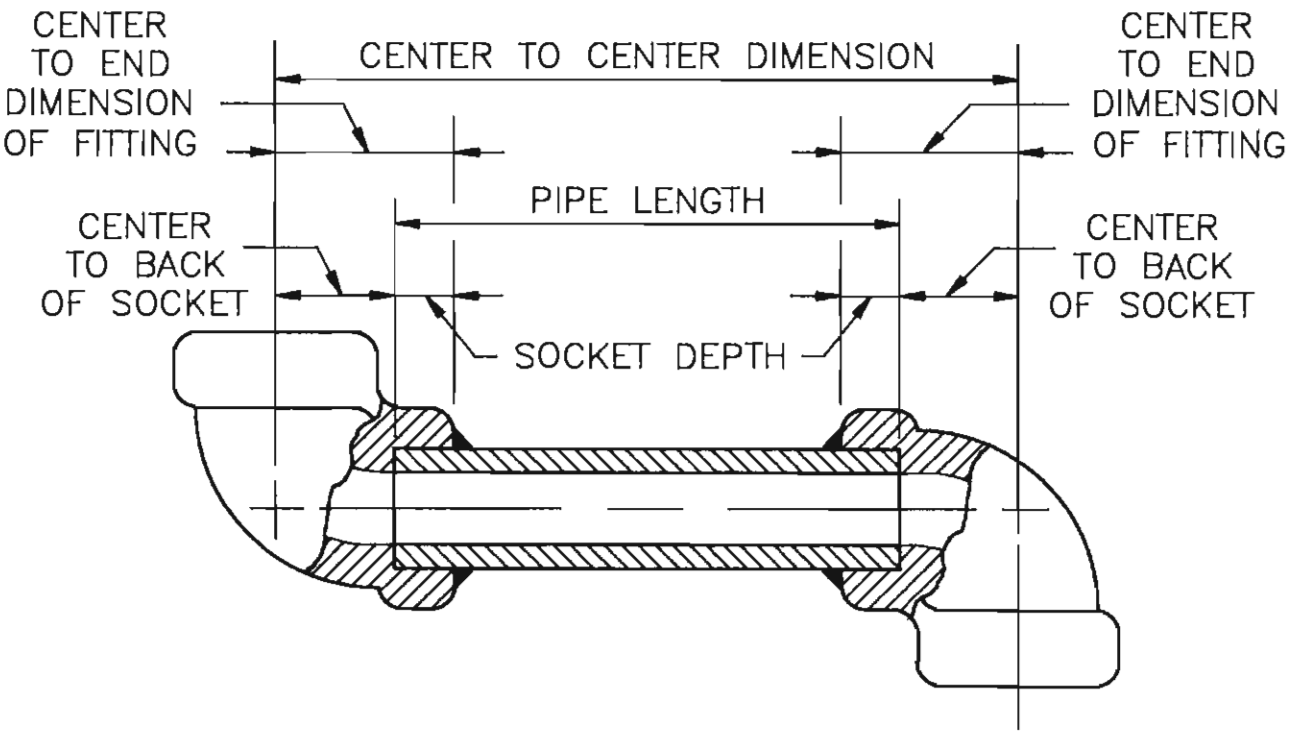

Figure 3-50. Socket-weld fittings.

Figure 3-51. Screwed and socket-weld fittings.

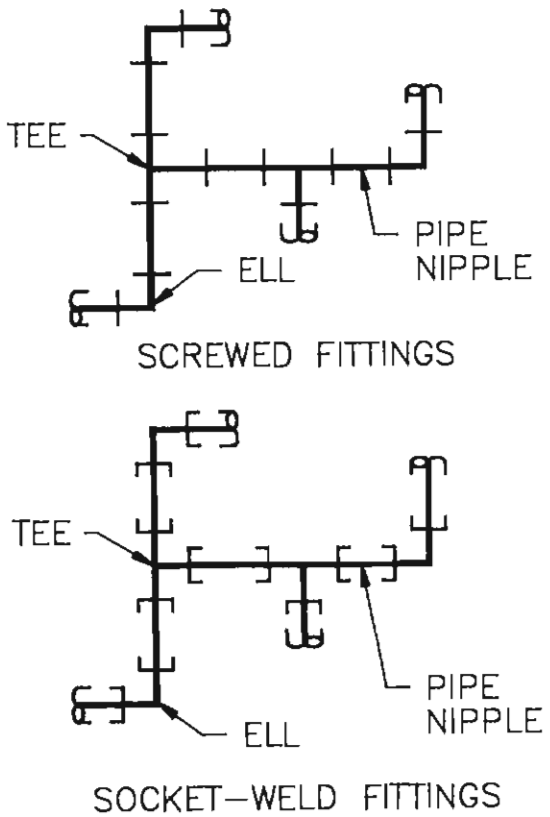

Figure 3-52. Screwed and socket-weld drawing symbols.

Swage

One exception to the standard 3″ minimum rule is the *swage* nipple. Swages are functionally similar to reducers, but are specifically designed for screwed and socket-weld pipe. Screwed swages have male (external) threads and can be connected to other screwed fittings without the use of a pipe nipple. They are used to make reductions in the line size on a straight run of pipe. Swages, like reducers, are available in either a concentric or eccentric shape. Figure 3-57 shows varying lengths and sizes of screwed pipe and swage nipples.

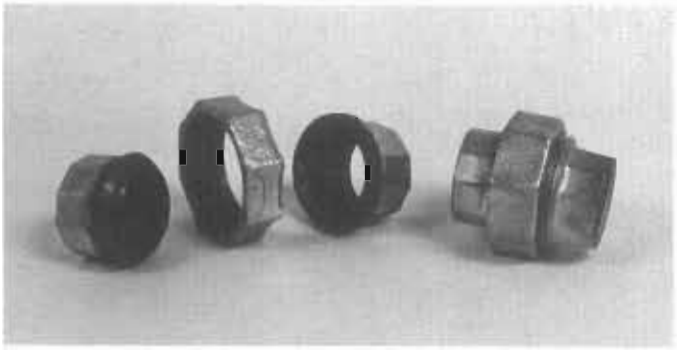

Figure 3-53. Union.

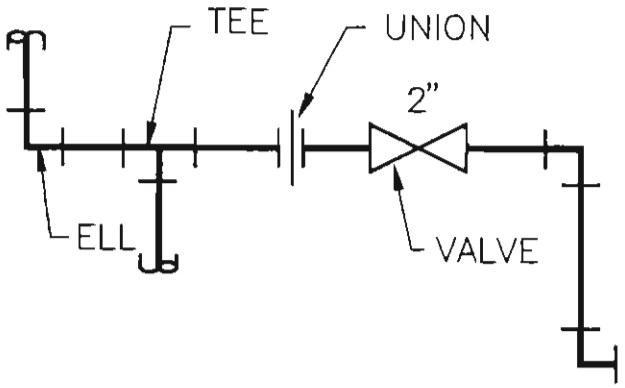

Figure 3-55. Positioning of unions.

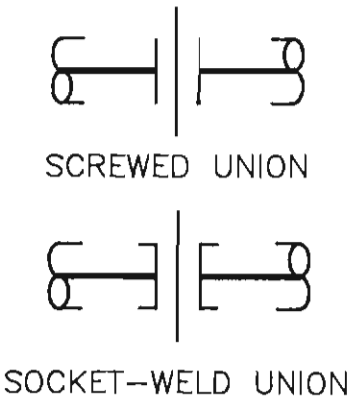

Figure 3-54. Union drawing symbols.

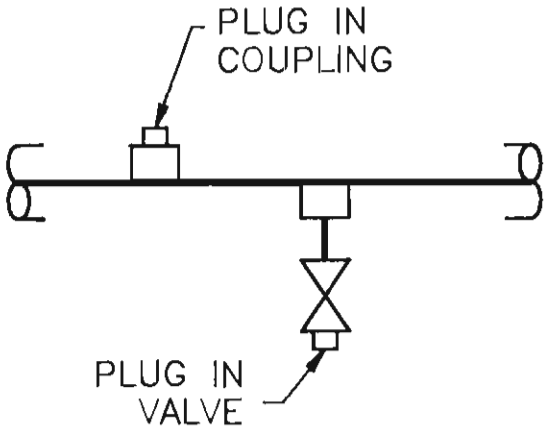

Figure 3-56. Plug drawing symbols.

Swages are unique in that they can be used in screwed, socket-weld, or butt-weld configurations. When used in these configurations, swages will have different end preparations. Screwed swages will have thread ends (TE), socket-weld swages plain ends (PE), and butt-weld swages have beveled ends (BE). Because socket-weld swages are inserted into mating fittings, many companies allow the substitution of beveled-end swages. Dual purpose fittings like these will make the job of the purchasing group much easier. Swages are also manufactured with different preparations on the two ends. When specifying a swage, use the following abbreviations:

BBE—bevel both ends

TBE—thread both ends

PBE—plain both ends

BLE/TSE—bevel large end/thread small end

PLE/TSE—plain large end/thread small end

Figure 3-58 depicts the concentric swage. Notice the end preparation combinations on the examples.

Figure 3-59 shows the drawing symbols for swages.

FLANGED FITTINGS

Flanged fittings perform functions similar to other fittings of the same type. The major difference is their method of connection. The connection joint for flanged fittings is made by bolting two specially designed metal surfaces together. A gasket to prevent leaks is sandwiched between the two surfaces. Flange types will be discussed at great length in the following chapter.

Figure 3-57. Pipe and swage nipples.

Figure 3-58. Concentric swages.

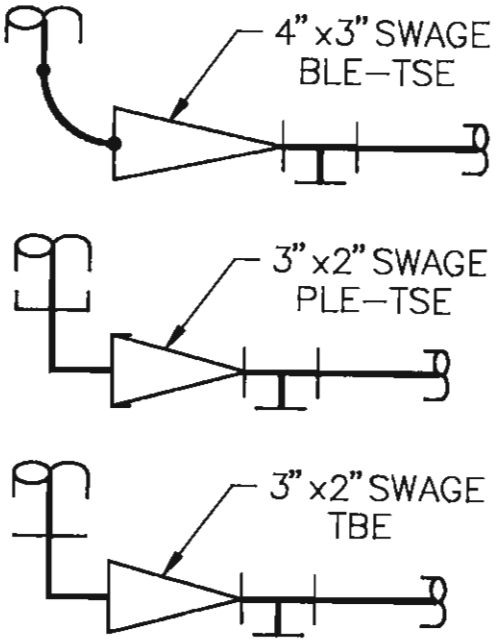

Figure 3-59. Swage drawing symbols.

CAST IRON FITTINGS

Cast iron fittings are typically designed for use in gravity-flow installations using low-pressure water services. The physical appearance of pipe routing configurations made of cast iron fittings is quite different from pipe routed with forged steel fittings because of the large assortment of fittings available and the method in which these configurations are assembled. Above-ground configurations often require multiple changes in direction and elevation to avoid obstructions with pre-existing installations. Because molten cast iron can be easily manufactured into many unique shapes that cannot be attained with steel, manufacturers use it to produce fittings with many varying turns, bends, and branches.

PLASTIC FITTINGS

Plastic fittings can also be manufactured in many diverse and unique shapes. All the standard fitting shapes are available: elbows, tees, reducers, couplings, unions, etc. Plastic fittings are manufactured for either screwed, socket, or butted assembly. Plastic screwed and socket fittings are available in sizes through 4″ in diameter. Butt fittings are manufactured for sizes 6″–10″.

CHAPTER 3 REVIEW QUIZ

1. Typically, pipe smaller than 3″ in diameter is manufactured as having _____ or _____ end connections.
2. What is the most common fitting used?

   _____

3. What are the four classifications of elbows?

   _____

4. What is the formula for calculating the center-to-end dimension for LR and SR elbows?

   LR = _____

   SR = _____

5. Describe a mitered elbow. _____

   _____

6. When configuring tee connections, what is the main run of pipe called? _____
7. Name the two types of tees. _____

   _____

8. What are some alternate methods to a tee fitting when fabricating branch connections? _____

   _____

9. Which fitting is used to make a reduction in the line size of a run of pipe? _____

   _____

10. Name the two types of reducers. _____

    _____

11. Define fitting make-up. _____

    _____

12. What are the two pressure classifications for screwed and socket-weld fittings?

    _____

13. What type of fittings must be bolted together? _____
14. What is the typical installation service for cast iron pipe? _____
15. Name the three types of plastic fitting end types manufactured. _____

    _____

    _____

EXERCISE INFORMATION

The fittings depicted in Figure 3-60 will be used to complete the exercises in Chapters 3, 4, 5, and 10. To complete the exercises, draw the symbols below using the following guidelines.

- Start from scratch and draw all symbols full scale.
- Draw symbols with a **PLINE** having a width of .56″ (9/16″) for single line symbols and a 0″ width for double line fittings. Symbols requiring a full circular shape must be drawn with the **PLINE** command *ARC* option. These arcs can only be drawn with a 359° circumference.
- Create weld dots with a 1.75″ diameter **DONUT**.
- Block each symbol individually using the block name indicated. (DO NOT include text with the blocked symbol.)
- Place a base point on one end of each fitting using *MIDpoint, ENDpoint*, or *CENter* **OSNAP** options.
- In the "*Block Definition*" dialog box check the *Create icon from block geometry* radio button.
- **SAVE** the file as "*ELBOWS.dwg*".

After the symbols have been created and the drawing saved, start the exercise drawing and use *AutoCAD Design Center* to open the file *ELBOWS.dwg*. Insert the required symbols into the appropriate locations.

NOTE: The pipe break symbol is created with ellipses. The major axis of each ellipse is equal to one-half of the pipe's OD. **TRIM** or **BREAK** an ellipse to create the elliptical arc on the pipe break as necessary.

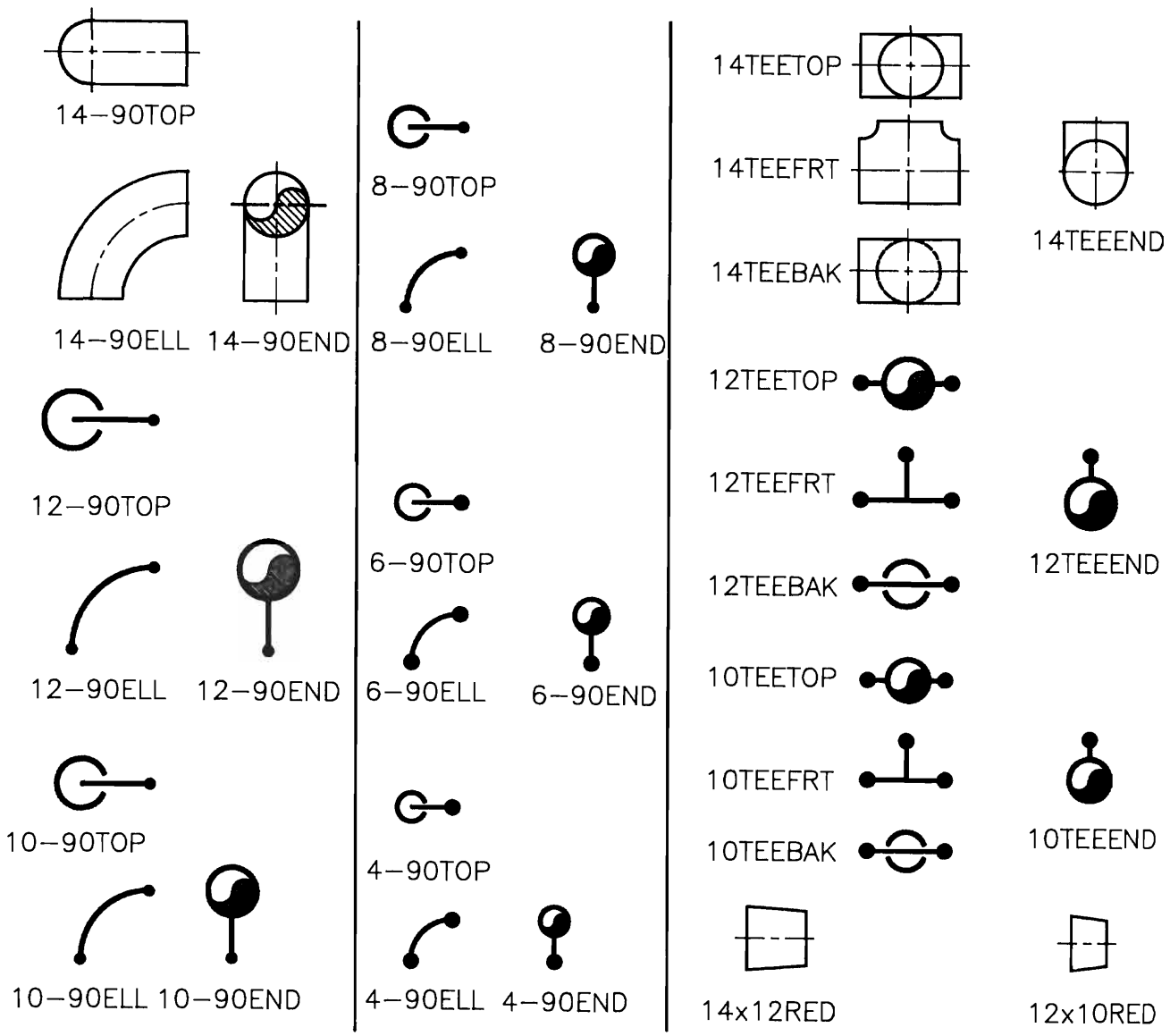

Figure 3-60. AutoCAD drawing symbols and File names.

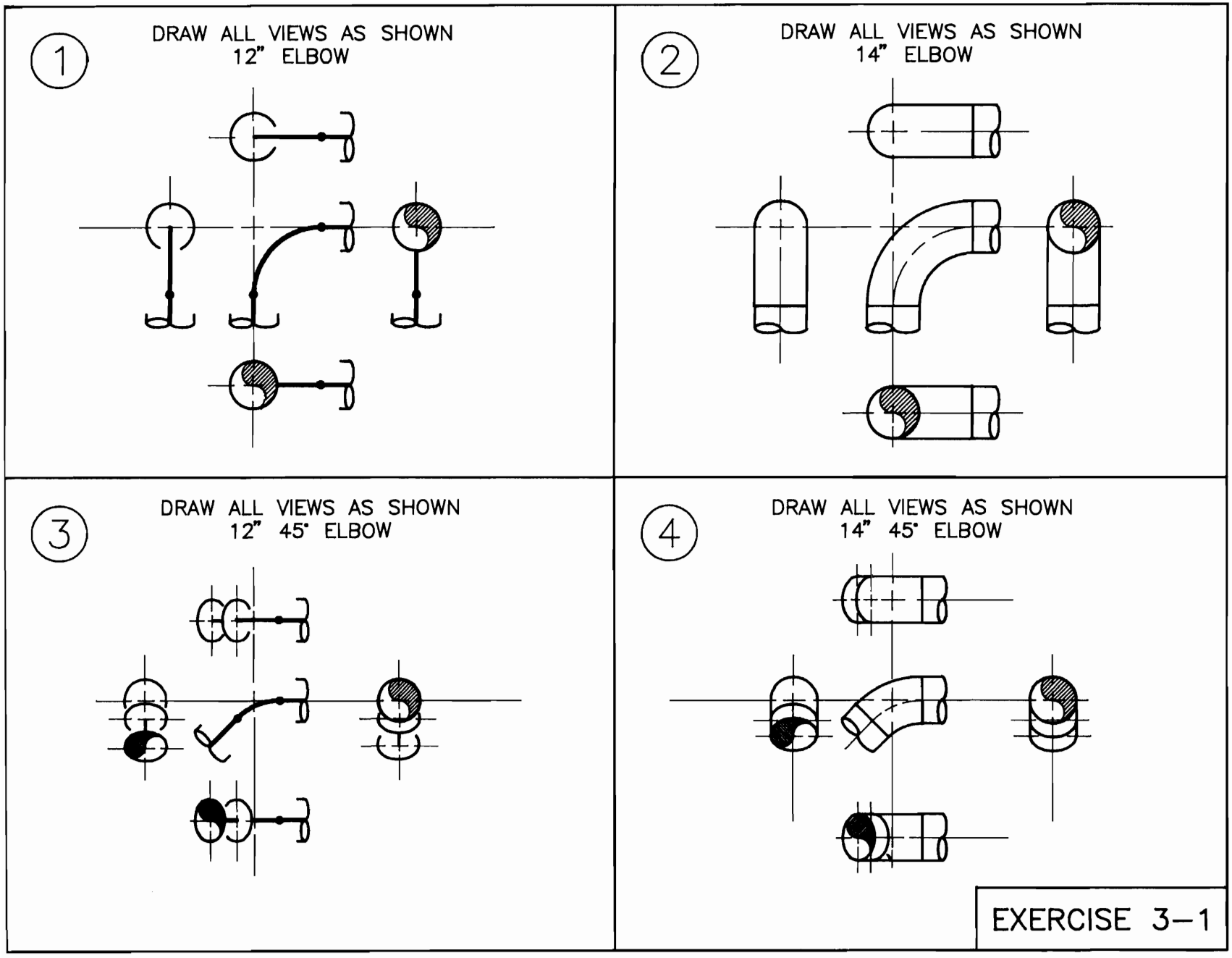
1
DRAW ALL VIEWS AS SHOWN
12" ELBOW
2
DRAW ALL VIEWS AS SHOWN
14" ELBOW
3
DRAW ALL VIEWS AS SHOWN
12" 45° ELBOW
4
DRAW ALL VIEWS AS SHOWN
14" 45° ELBOW
EXERCISE 3–1

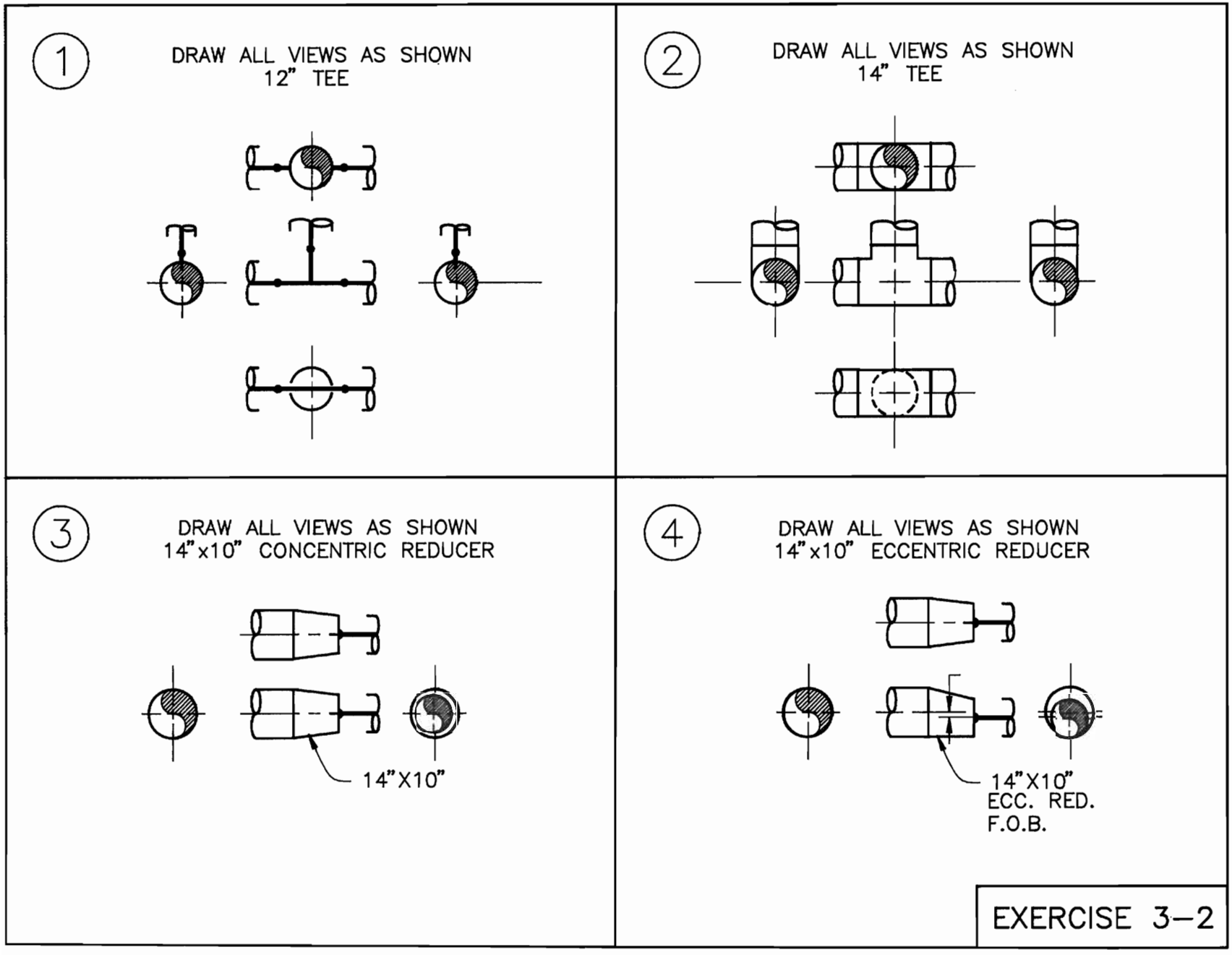
1
DRAW ALL VIEWS AS SHOWN
12" TEE
2
DRAW ALL VIEWS AS SHOWN
14" TEE
3
DRAW ALL VIEWS AS SHOWN
14"x10" CONCENTRIC REDUCER
14"X10"
4
DRAW ALL VIEWS AS SHOWN
14"x10" ECCENTRIC REDUCER
14"X10"
ECC. RED.
F.O.B.
EXERCISE 3–2

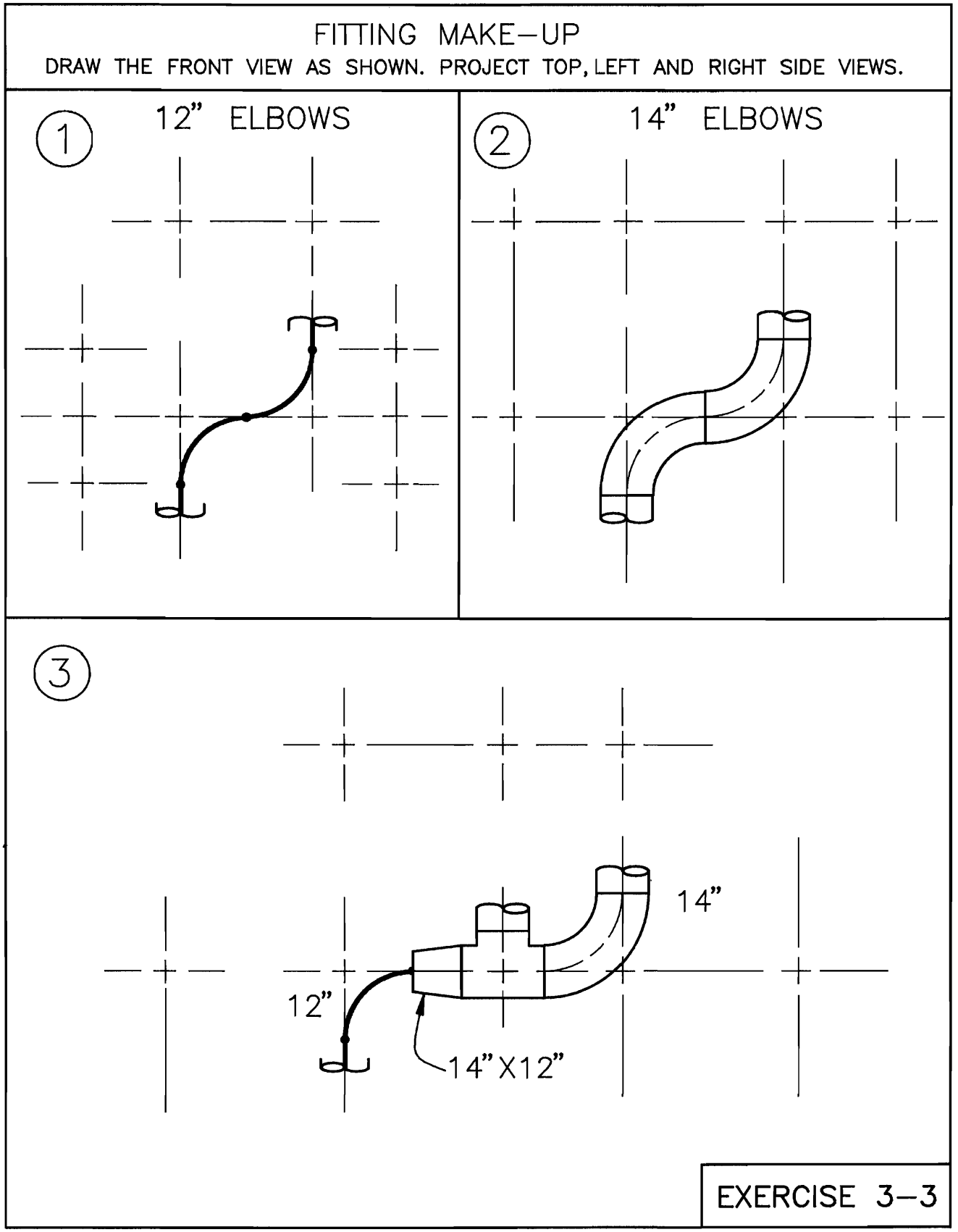
FITTING MAKE-UP
DRAW THE FRONT VIEW AS SHOWN. PROJECT TOP, LEFT AND RIGHT SIDE VIEWS.
1
12" ELBOWS
2
14" ELBOWS
3
14"
12"
14"X12"
EXERCISE 3-3

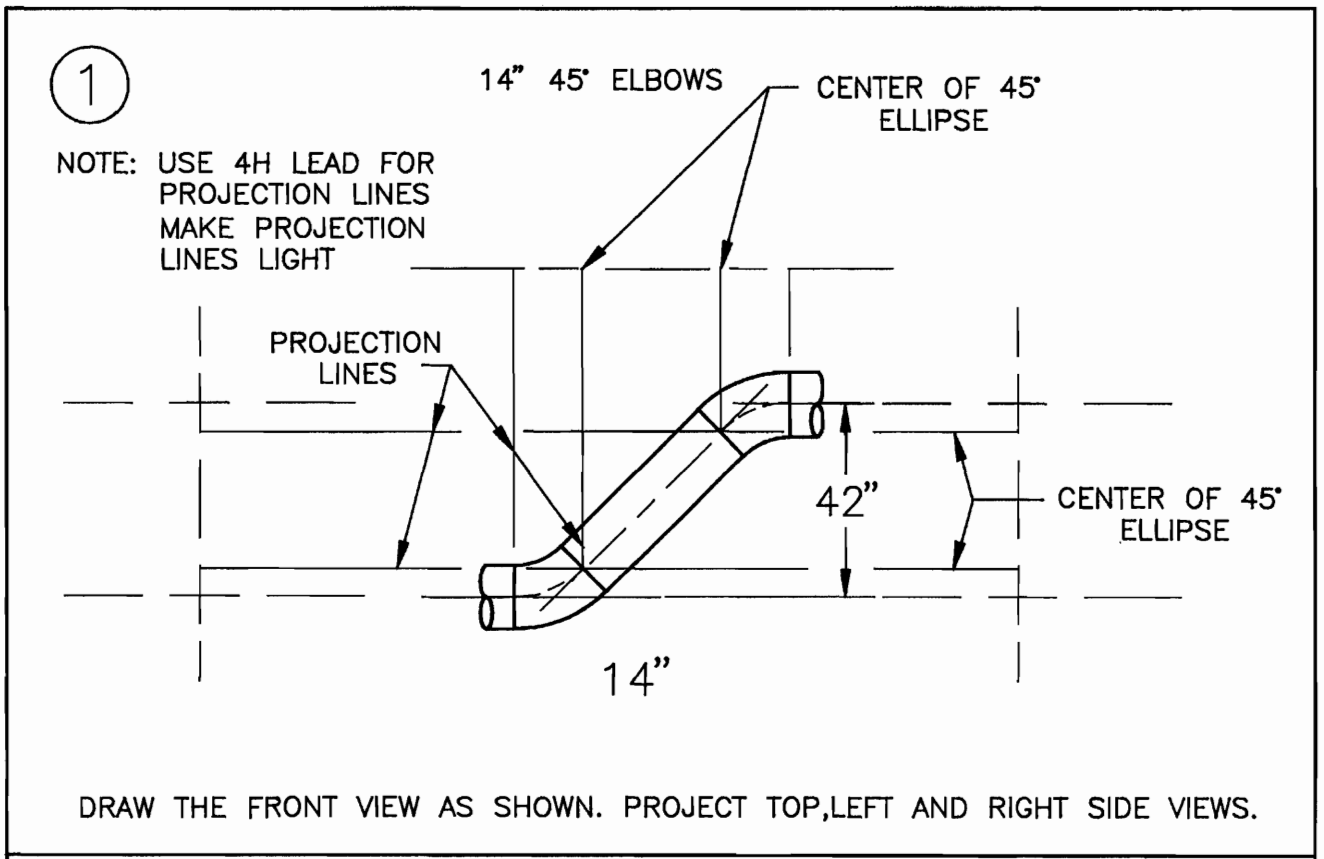
1
14" 45° ELBOWS
CENTER OF 45° ELLIPSE
NOTE: USE 4H LEAD FOR PROJECTION LINES MAKE PROJECTION LINES LIGHT
PROJECTION LINES
42"
CENTER OF 45° ELLIPSE
14"
DRAW THE FRONT VIEW AS SHOWN. PROJECT TOP,LEFT AND RIGHT SIDE VIEWS.

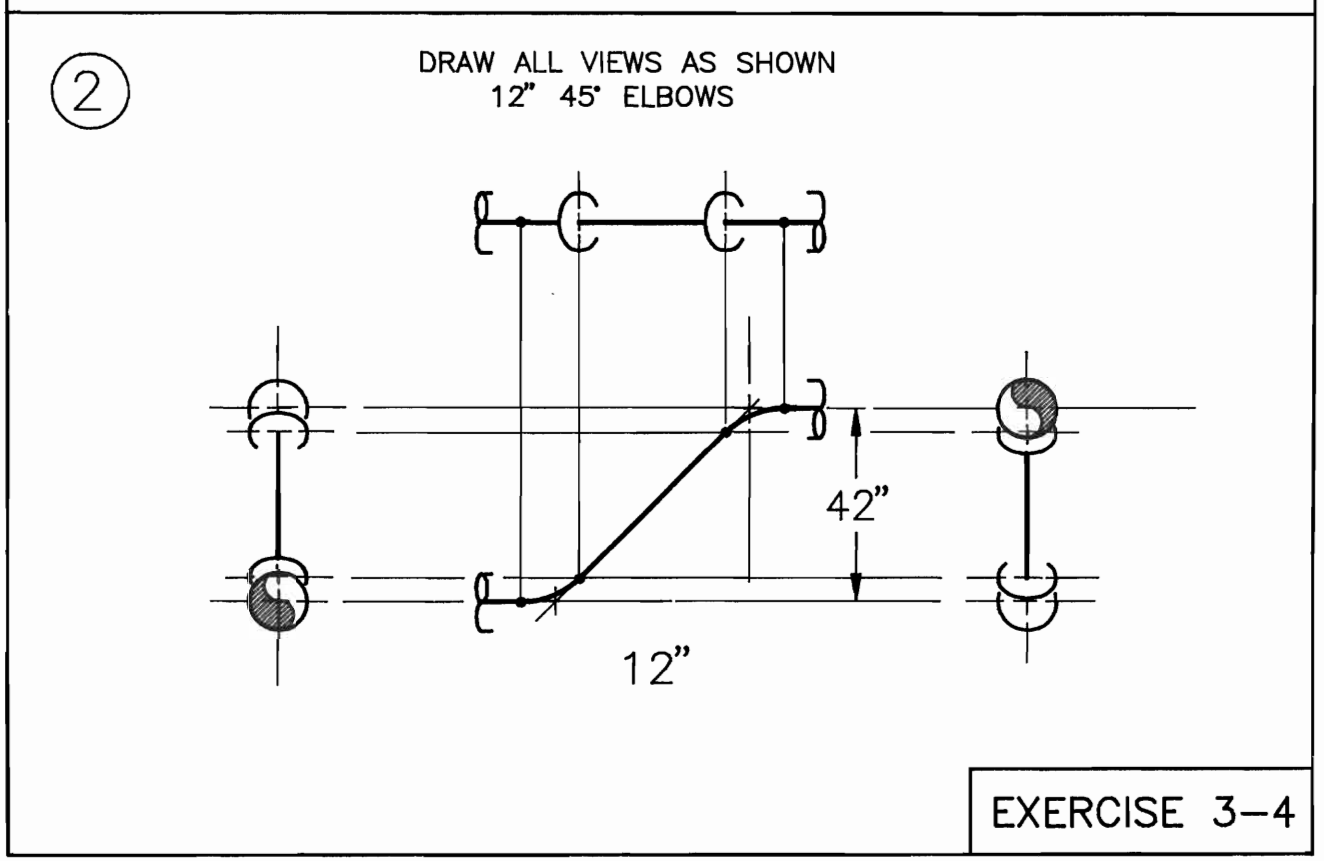
2
DRAW ALL VIEWS AS SHOWN
12" 45° ELBOWS
42"
12"
EXERCISE 3–4

FITTING MAKE-UP

SOLVE FOR THE MISSING DIMENSIONS

1

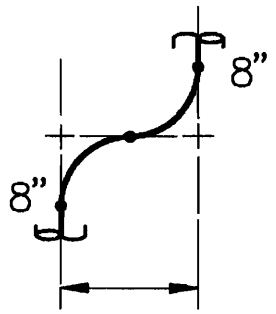

2

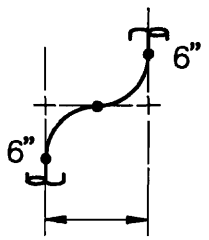

4

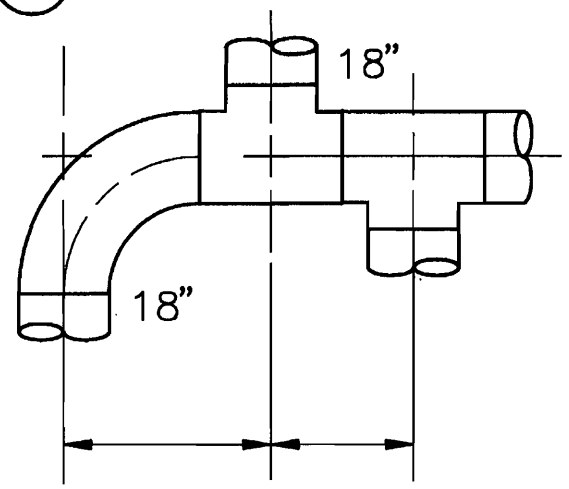

3

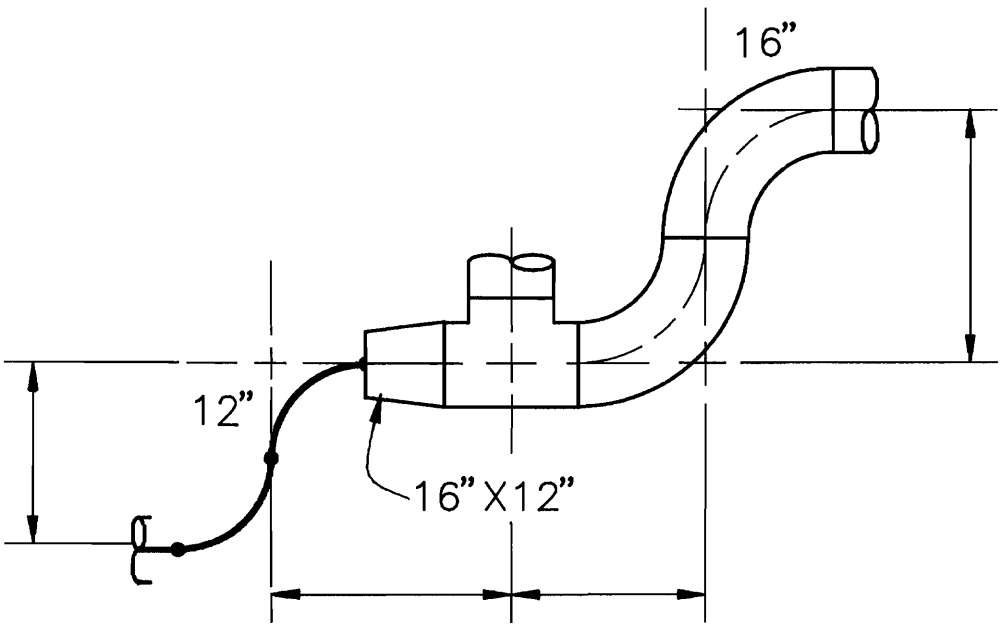

EXERCISE 3-5

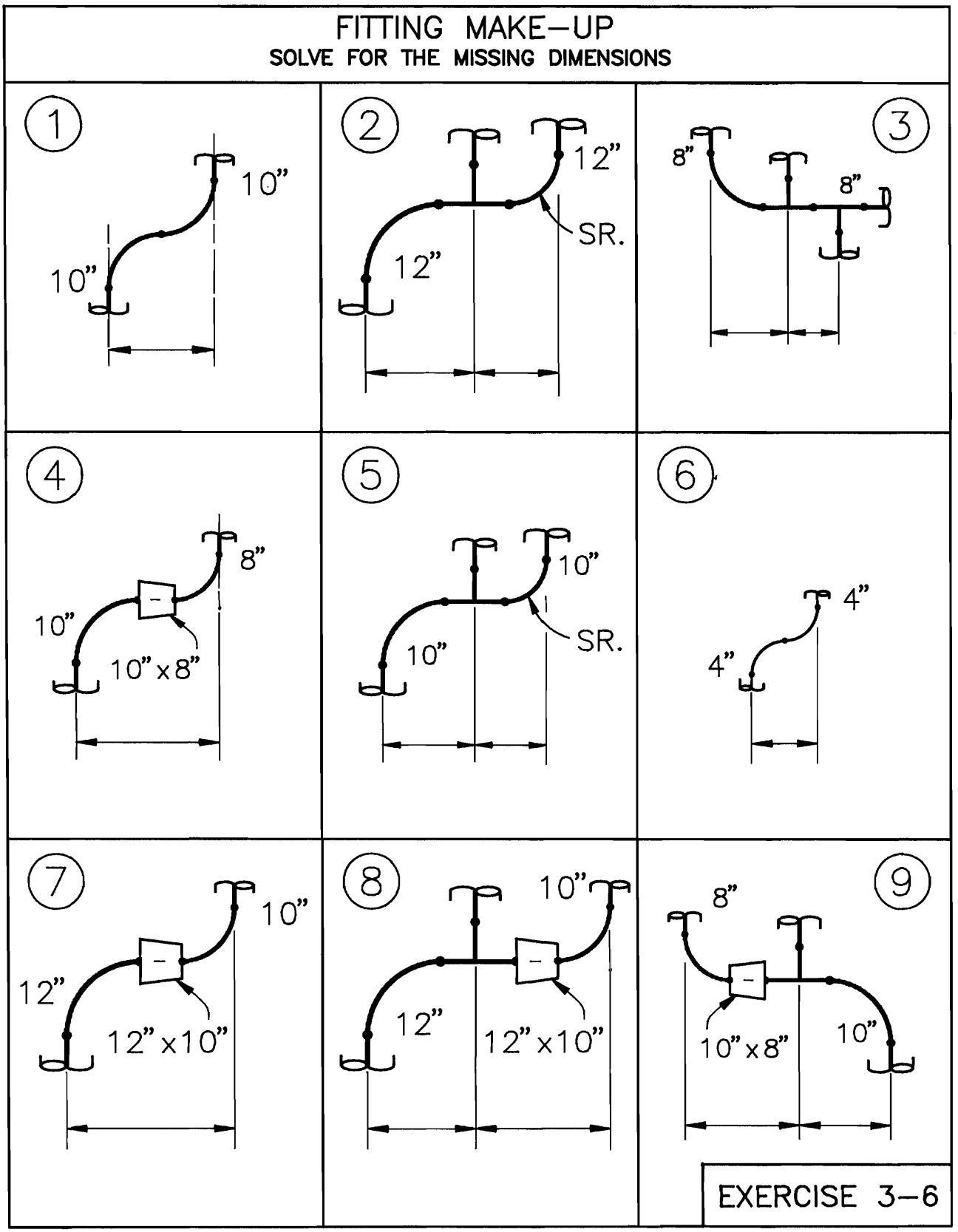
FITTING MAKE-UP
SOLVE FOR THE MISSING DIMENSIONS
1
10"
10"
2
12"
SR.
12"
3
8"
8"
4
8"
10"
10" x 8"
5
10"
SR.
10"
6
4"
4"
7
10"
12"
12" x 10"
8
10"
12"
12" x 10"
9
8"
10" x 8"
10"
EXERCISE 3-6

FITTING MAKE–UP

SOLVE FOR THE MISSING DIMENSIONS

① 3000#FS SCREWED
3" LONG NIPPLES

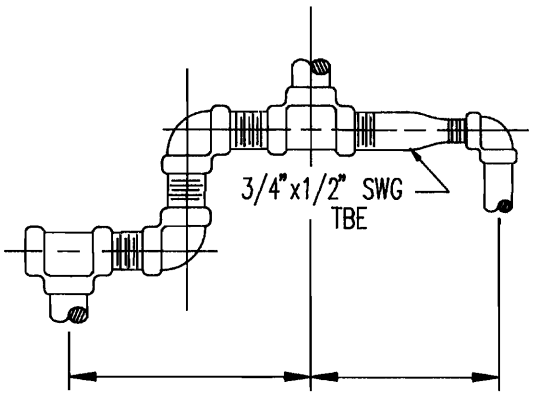

② 6000#FS SCREWED
3" LONG NIPPLES

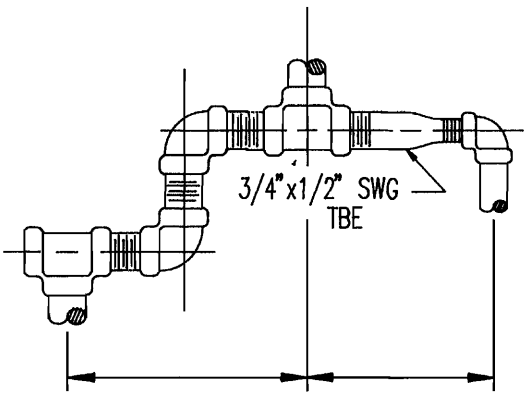

③ 3000# FS SW
3" LONG NIPPLES

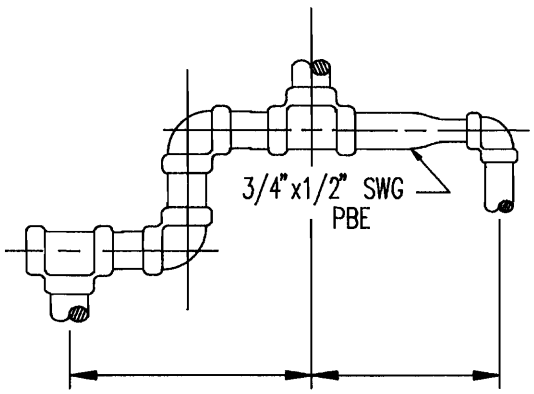

④ 6000# FS SW
3" LONG NIPPLES

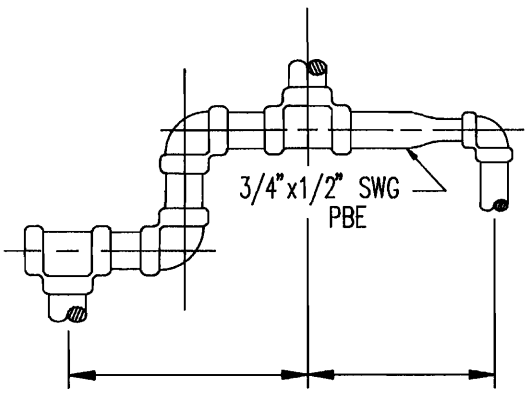

EXERCISE 3–7

Flange Basics

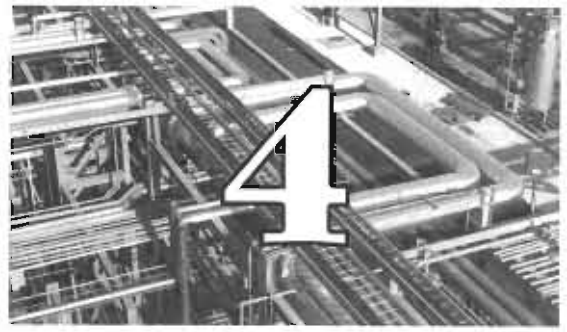

The flange is a ring-shaped device designed to be used as an alternative to welding or threading various piping system components used throughout the piping system. Flanged connections are used as an alternative to welding because they can be easily disassembled for shipping, routine inspection, maintenance, or replacement. Flanged connections are preferred over threaded connections because threading large bore pipe is not an economical or reliable operation. The flange is an important component of any piping system.

Flanges are primarily used where a connecting or dismantling joint is needed. These joints may include joining pipe to fittings, valves, equipment, or any other integral component within the piping system.

To erect the piping system, every piece of mechanical equipment is manufactured with at least one outlet called a *nozzle*. The nozzle is the point where, via the flange, the piping system is connected to the equipment. From this flange, the piping system is begun. Figure 4-1 shows how a nozzle and flange are used to connect the piping system to a piece of equipment.

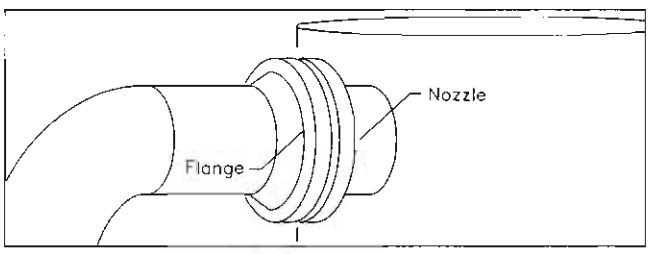

Figure 4-1. Nozzle and flange.

RATING FLANGES

Rating, as applied to flanges, may best be defined as the maximum pressure allowed by the pressure piping code for the specific temperature at which the flange will be operating. Flanges and nozzles are sized according to pressure ratings established by the American National Standards Institute (ANSI). These pressure ratings, sometimes called *pound ratings*, are divided into seven categories for forged steel flanges. They are 150#, 300#, 400#, 600#, 900#, 1500#, and 2500#. Cast iron flanges have pound ratings of 25#, 125#, 250#, and 800#.

Pound ratings, when combined with the temperature of the commodity within the pipe, are used to select the appropriate size, rating, and type of flange. This pressure/temperature relationship will allow any given flange to be used in a number of different applications. For example, a 150# forged steel flange is rated to perform at 150# PSIG at 500°F. If the temperature were decreased to 100°F, this same flange could be used for 275# PSIG. However, if the temperature were increased to 750°F, the flange could only be used for 100# PSIG. As you can see, the pressure/temperature relationship is important. When temperature decreases the allowable pressure increases, and vice versa. Pound ratings are also used to establish the outside diameter and thickness of a flange. Typically as pound ratings increase, so will the flange's diameter and thickness.

FLANGE FACINGS

The mating surface of a flange, nozzle, or valve is called the *face*. The face is usually machined to create a smooth surface. This smooth surface will help assure a leak-proof seal when two flanges are bolted together with a gasket sandwiched between.

Although numerous types of flange faces are produced, we will focus only on the following three:

- flat face
- raised face
- ring-type joint

Flat face

As the name implies, flanges with flat faces are those that have a flat, level connecting surface (see Figure 4-2). Forged steel flanges with a flat face flange are commonly

Figure 4-2. Flat face.

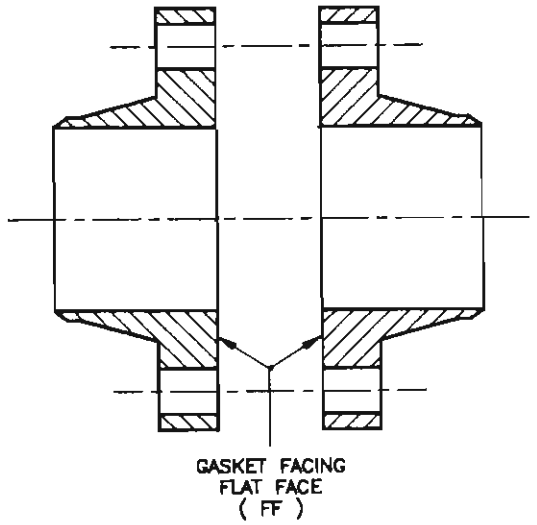

Figure 4-3. Welding neck flange with flat face.

found in 150# and 300# ratings. Their principal use is to make connections with 125# and 250# cast iron flanges, respectively. Attaching steel pipe to the cast iron flanges found on some valves and mechanical equipment always presents a problem because of the brittle nature of cast iron. Using a flat face flange will assure full surface contact, thereby reducing the possibility of cracking the softer cast iron. Figure 4-3 shows a sectional view of a flange with a flat face.

Raised Face

The most common face type in use, the raised face is available in all seven of the aforementioned pound ratings. Appropriately named, this flange face has a prominent raised surface. With shallow grooves etched into the raised surface, this flange face assures a positive grip with the gasket. Flanges rated 150# and 300# have a 1/16″ raised face, while flanges 400# and above have a ¼″ raised face (see Figure 4-4). It is important to note most dimensioning charts, including the ones provided in this text, include the 1/16″ raised face thickness in the length dimensions for 150# and 300# flanges. However, the ¼″ raised face thickness is *not* always included in the length dimensions for 400# and higher pound ratings. To assure accurate dimensioning, always determine if the dimensioning chart being used includes the ¼″ raised face thickness for the larger pound rating flanges. The ¼″ raised face thickness *must* be added to the dimensioning chart measurement to obtain the overall flange length if the dimensioning chart indicates it has not been added. Figure 4-5 includes a sectional view of a weld neck flange having a raised face.

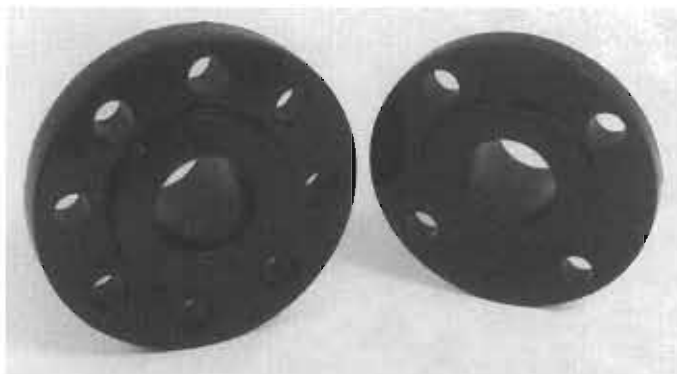

Figure 4-4. Raised face.

Ring-Type Joint

Also known simply as *ring joint*, the ring-type joint does not use a gasket to form a seal between connecting flanges. Instead a round metallic ring is used that rests in a deep groove cut into the flange face (see Figure 4-6). The donut-shaped ring can be oval or octagonal in design. As the bolts are tightened, the metal ring is compressed, creating a tight seal.

Although it is the most expensive, the ring-type joint is considered to be the most efficient flange used in process piping systems. The ring and groove design actually uses internal pressures to enhance the sealing capacity of the connecting flanges. The superiority of this seal can have its disadvantages, however. When dismantling ring joint connections, the flanges must be forcibly separated to release the ring from the groove. In crowded installations, this could cause major problems. Because of this, the ring

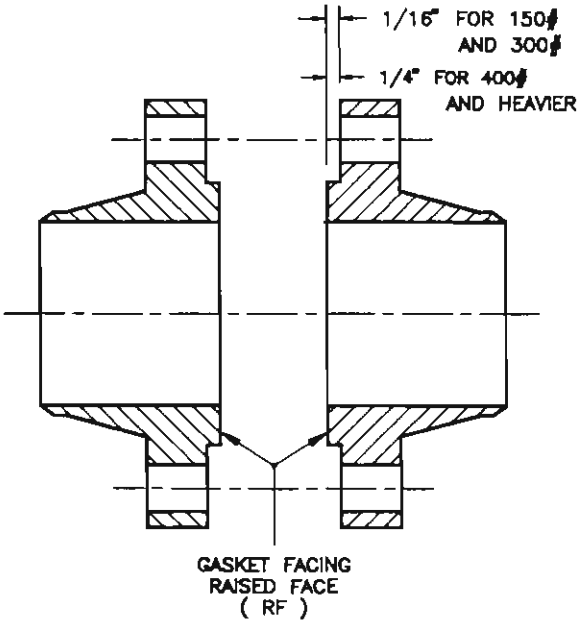

Figure 4-5. Weld neck flange with raised face.

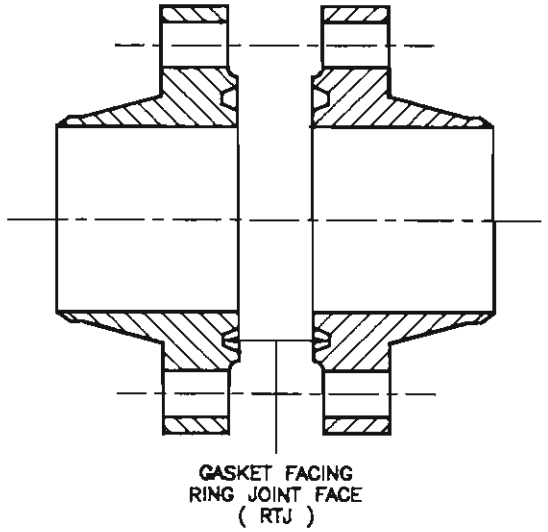

Figure 4-7. Weld neck flange with a ring-type joint face.

Figure 4-6. Ring-type joint.

joint flange is relegated to applications where space for maintenance and replacement are adequate.

Although available for all pound ratings, flanges with ring-type joint faces are normally used in piping systems rated 400# and higher. See Figure 4-7 for the sectional view of a flange with a ring-type joint face.

FLANGE TYPES

Flanges have been designed and developed to be used in a myriad of applications. Each one has its own special characteristics, and should be carefully selected to meet specific function requirements. The following flanges will be discussed in this chapter:

- weld neck
- threaded
- socket weld
- slip-on
- lap-joint
- reducing
- blind
- orifice

NOTE: A photograph and short description accompanies each flange as well as symbols to depict the flange as it would appear on a drawing. The manual and **AutoCAD** techniques for creating the drawing symbols are shown for the weld neck flange only. The drawing symbols for the remaining flanges can be created in a similar fashion with only a few minor alterations.

Weld Neck Flange

The *weld neck flange* shown in Figure 4-8 is occasionally referred to as the "high-hub" flange. It is designed to reduce high-stress concentrations at the base of the flange by transferring stress to the adjoining pipe. Although expensive, the weld neck flange is the best-designed butt weld flange available because of its inherent structural value and ease of assembly.

Known for its strength and resistance to dishing, the weld neck flange is manufactured with a long tapered hub. The tapered hub is created by the gradual increase in metal thickness from the weld joint to the flange facing. The symmetrical taper transition is extremely beneficial under conditions of repeated bending caused by line expansion, contraction, or other external forces. See Figure 4-9, for weld neck flange drawing symbols.

Weld neck flanges are normally used in severe service applications involving high pressures, high temperatures, or sub-zero conditions.

Weld neck flanges are bored to match the ID of the adjoining pipe. In other words, the thinner the wall of the pipe, the larger the bore (hole) through the flange. The thicker the wall of the pipe, the smaller the bore. Because of these matching IDs, there is no restriction to the flow. Turbulence and erosion are therefore eliminated.

Drawing the Weld Neck Flange

Prior to constructing the manual and **AutoCAD** symbols, certain dimensional information must be provided. These dimensions can be found on the welded fittings–flanges dimensioning chart shown in Figure 4-10. The figure in this chart represents the raised face weld neck flange.

Notice the three dimensions: ***O, T,*** and ***L.*** The ***O*** dimension represents the flange's OD. The ***T*** defines the flange's face thickness and the ***L*** provides the flange's length or *length-thru-hub* dimension. These three dimensions are required to construct the drawing symbols of each flange.

To find the numerical values for these dimensions, locate the appropriate pound rating section, that is, *150#, 300#*, etc. Find the proper size pipe in the *Nominal Pipe Size* column. Follow across the chart to determine the ***O, T,*** and ***L*** dimensions. For our demonstration, we will be using a *14"-300# raised face weld neck (RFWN)* flange. You should find the ***O, T,*** and ***L*** measurements for this flange to be 23", 2 1/8", and 5 5/8" respectively.

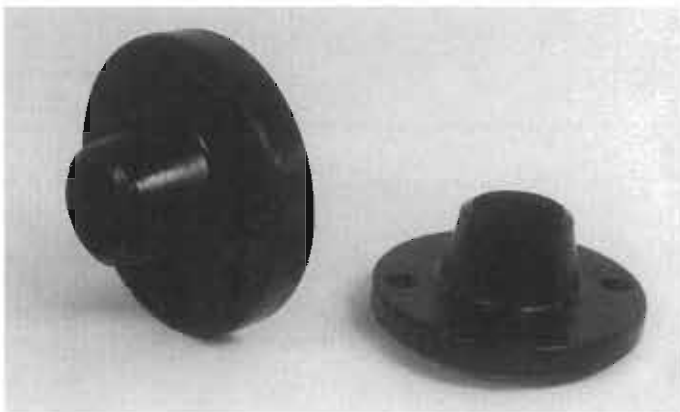

Figure 4-8. Weld neck flange.

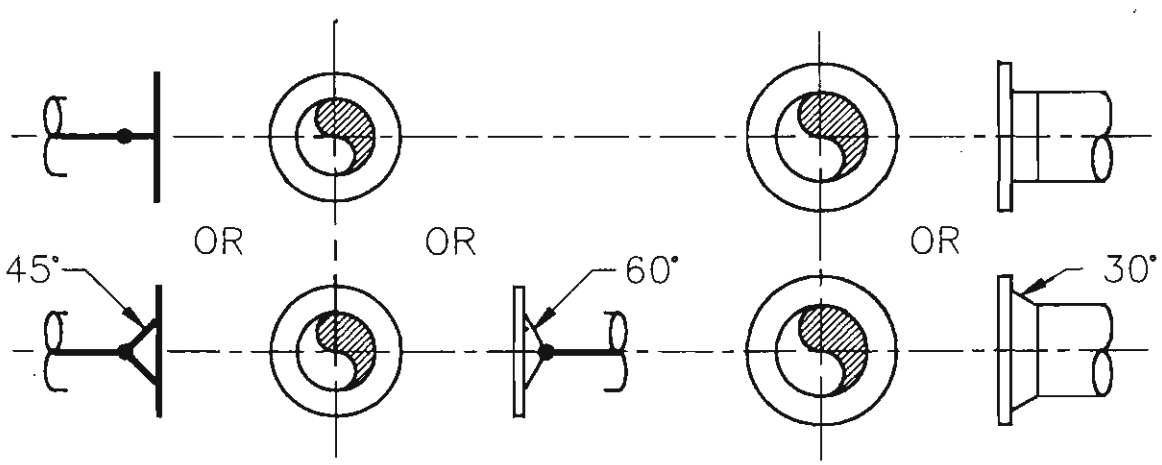

Single line: 12" and smaller

Double line: 14" and larger

Figure 4-9. Weld neck flange drawing symbols.

Two step-by-step methods will be presented for constructing the weld neck flange. Figure 4-11 demonstrates steps using manual drafting techniques. Figure 4-12 presents the steps using **AutoCAD** commands.

Slip-on Flange

The *slip-on flange* shown in Figure 4-13 has a low hub that allows the pipe to be inserted into the flange prior to welding. Shorter in length than a weld neck flange, the slip-on flange is used in areas where short tie-ins are necessary or space limitations necessitate its use. Two significant disadvantages, however, are the requirements of two fillet welds, one internal and one external, to provide sufficient strength and prevent leakage, as well as a life span about one-third that of the weld neck flange. They are preferred over welding neck flanges by many users because of their lower initial cost. However, the total cost after installation is not much less than the welding neck because of the additional welding involved. See the Taylor Forge Seamless Fittings Dimensioning Chart in Appendix A for dimensions of the slip-on flange. The drawing symbols for the slip-on flange are shown in Figure 4-14.

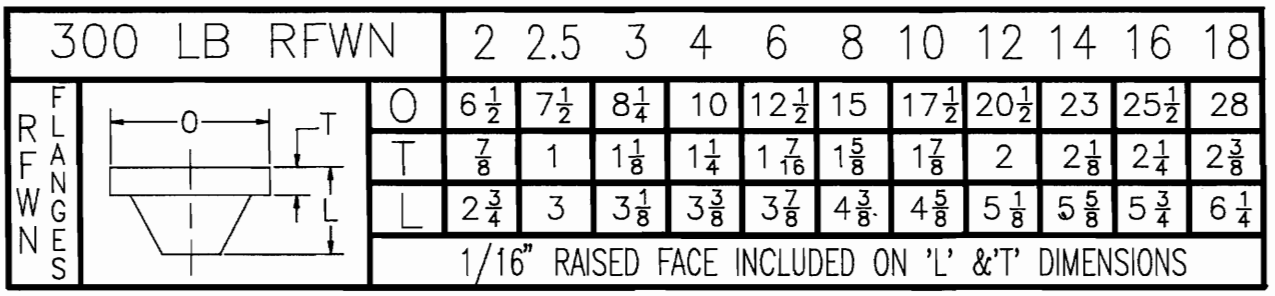

300 LB RFWN	2	2.5	3	4	6	8	10	12	14	16	18
O	$6\frac{1}{2}$	$7\frac{1}{2}$	$8\frac{1}{4}$	10	$12\frac{1}{2}$	15	$17\frac{1}{2}$	$20\frac{1}{2}$	23	$25\frac{1}{2}$	28
T	$\frac{7}{8}$	1	$1\frac{1}{8}$	$1\frac{1}{4}$	$1\frac{7}{16}$	$1\frac{5}{8}$	$1\frac{7}{8}$	2	$2\frac{1}{8}$	$2\frac{1}{4}$	$2\frac{3}{8}$
L	$2\frac{3}{4}$	3	$3\frac{1}{8}$	$3\frac{3}{8}$	$3\frac{7}{8}$	$4\frac{3}{8}$	$4\frac{5}{8}$	$5\frac{1}{8}$	$5\frac{5}{8}$	$5\frac{3}{4}$	$6\frac{1}{4}$
1/16" RAISED FACE INCLUDED ON 'L' &'T' DIMENSIONS											

Figure 4-10. Welded fittings–flanges dimensioning chart.

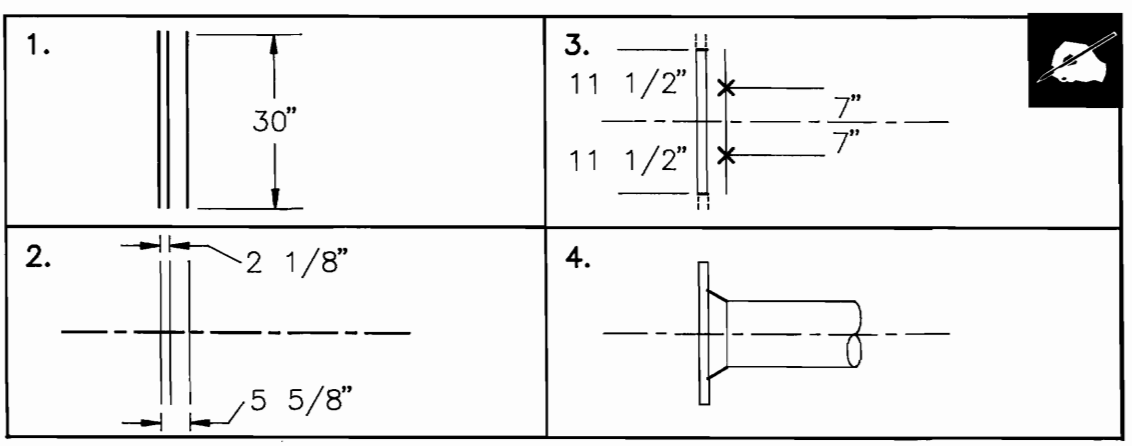

Figure 4-11. Manual drafting solutions for a 14"-300# RFWN flange.

Step 1. Draw a vertical construction line approximately 30" tall. (This will represent the flange face.) To the right, draw a parallel line 2⅛" away. Draw another parallel line 5⅝" away from the first.

Step 2. Bisect the three lines with a centerline.

Step 3. On the flange face measure 11½" (one-half of the 23" flange OD) above and below the centerline. On the right end of the flange, measure 7" (one-half of the 14" pipe OD) above and below the centerline.

Step 4. Draw 30° lines to represent the flange hub. Connect the face thickness with short horizontal lines. Darken the flange as required. A short piece of pipe can be added if necessary.

Step 5. When constructing single-line symbols, the flange will be represented as a **T** shape. The flange face is typically drawn as a single line the thickness of a double wide .7mm lead. A weld dot will be placed on the end of the flange at the point where the pipe is attached (see Figure 4-9).

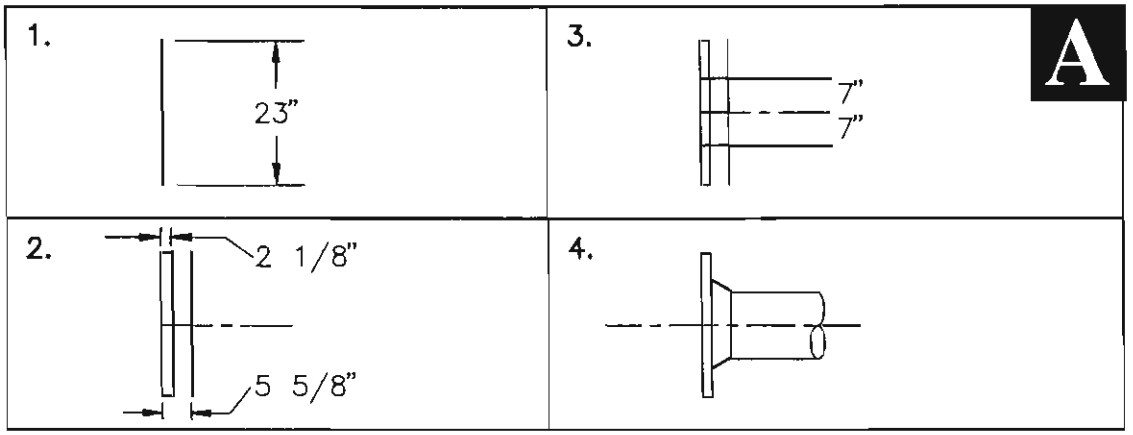

Figure 4-12. 14"-300# RFWN flange. **AutoCAD** commands.

Drawing set-up
Set **LINETYPE** to *Continuous*
Set **LIMITS:** lower left corner—(0,0)
upper right corner—(10,30)

ZOOM, All

Step 1. Draw a vertical **LINE** 23" tall from 2,4. (This line will represent the flange's face).

Step 2. Use **OFFSET** to draw the flange face thickness 2⅛" toward the right. Close the top and bottom ends. **OFFSET** the flange face line 5⅝" to the right. (This will establish the length-thru-hub distance.) From the **MIDpoint** of the flange face, draw the flange's centerline to the right.

Step 3. **OFFSET** the centerline 7" (one-half of the 14" pipe OD) above and below the pipe's centerline. **CHANGE** the linetype of these two lines to *Continuous.*

Step 4. From the right end of the flange, draw 30° lines toward the flange face to represent the flange hub. **TRIM** as required. **ERASE** construction lines. When constructing single-line symbols, use **PLINEs** having a width of .56" (9/16") full scale or .0175" when drawing to ⅜" = 1'-0" scale to draw the face thickness and hub length. Use a **DONUT** with a fullscale inside diameter of 0.000" and an outside diameter of 1.75" as a symbol for the weld dot. Weld dots drawn to ⅜" = 1'-0" scale will have an outside diameter of .05".

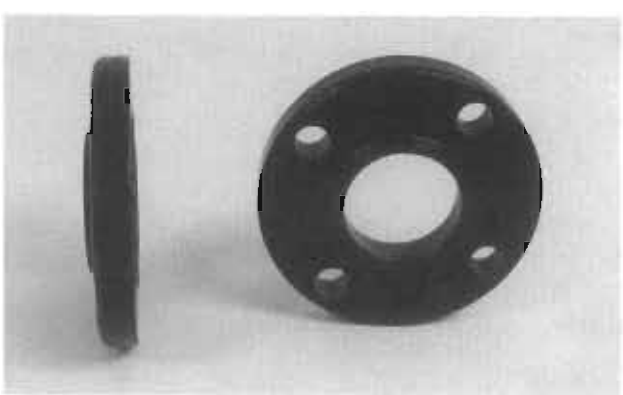

Figure 4-13. Slip-on flange.

Lap-Joint Flange

The *lap-joint flange* in Figure 4-15 is primarily used on carbon or low alloy steel piping systems. Attachment of the lap-joint flange to the piping system requires a lap-joint stub end. The lap-joint flange and stub end assembly are used mainly in piping systems that necessitate frequent dismantling for inspection or routine maintenance. It is also used in the erection of large diameter or hard-to-adjust piping configurations because of its quick bolt hole alignment. Figure 4-16 depicts the drawing symbols for the lap-joint flange.

Threaded Flange

The *threaded flange* depicted in Figure 4-17 similar to the slip-on flange, but the bore is threaded. Its principal value is that it can be assembled without welding. This feature makes the threaded flange well-suited to extreme pressure services that operate at normal atmospheric temperatures and in highly explosive areas where welding may create a hazard.

Threaded flanges are not suited, however, for conditions involving temperatures or bending stresses of any significance, particularly when cyclic conditions exist, which may cause leakage through the threads. After just a relatively few cycles of expansion and contraction or movement caused by stress, the threaded flange no longer performs adequately.

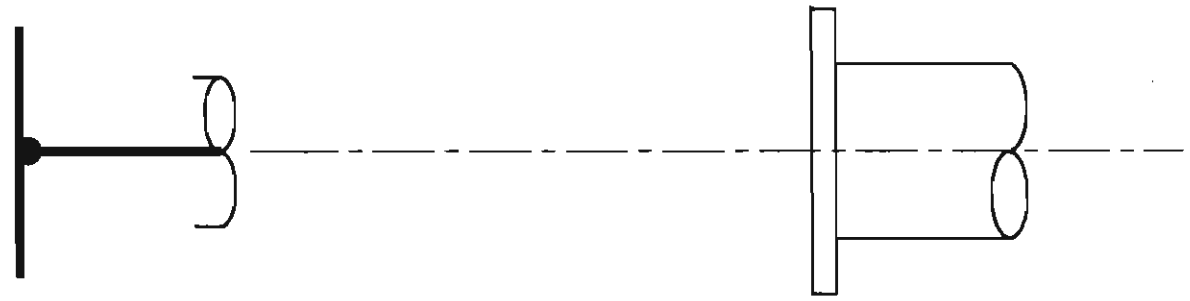

Figure 4-14. Slip-on flange drawing symbols.

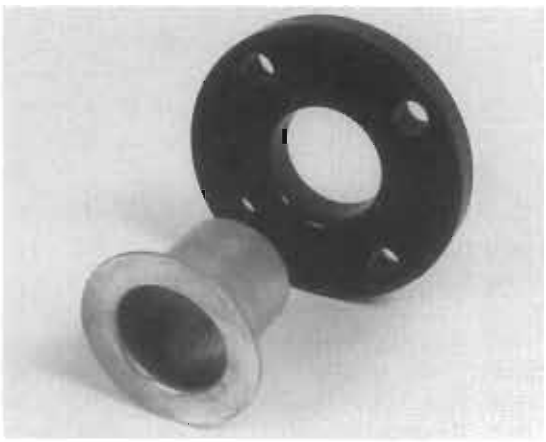

Figure 4-15. Lap-joint flange.

A *seal weld* is sometimes applied around the threaded joint to reduce the possibility of leakage. This technique, however, cannot be considered as entirely satisfactory nor is it always possible. Figure 4-18 represents the single-line threaded flange drawing symbol.

Socket Weld Flange

The *socket weld flange* shown in Figure 4-19 is also similar to the slip-on flange. It was originally developed for use on small diameter (½″ through 4″) high-pressure piping systems. Like socket weld fittings, pipe is inserted into the socket then welded. An internal weld is often employed for added strength. By grinding the internal weld smooth, turbulence and flow restriction are kept to a minimum. The single-line drawing symbol for the socket-weld flange is shown in Figure 4-20.

Reducing Flange

Like the reducer fitting, the *reducing flange* in Figure 4-21 is used to make a reduction in the diameter of the pipe. A reducing flange is most frequently used in installations with limited space. Crowded situations may necessitate the use of the reducing flange because it has a shorter overall length when compared to a weld neck flange and reducer-fitting configuration. Be advised however, the flow should travel from the smaller size to the larger. If the flow were reversed, severe turbulence could develop.

Callouts are placed on drawings to describe the reducing flange in the same manner as those used on the reducer fitting: large end first, small end second. One additional note is needed, however. The pound rating and flange type is included in the callout.

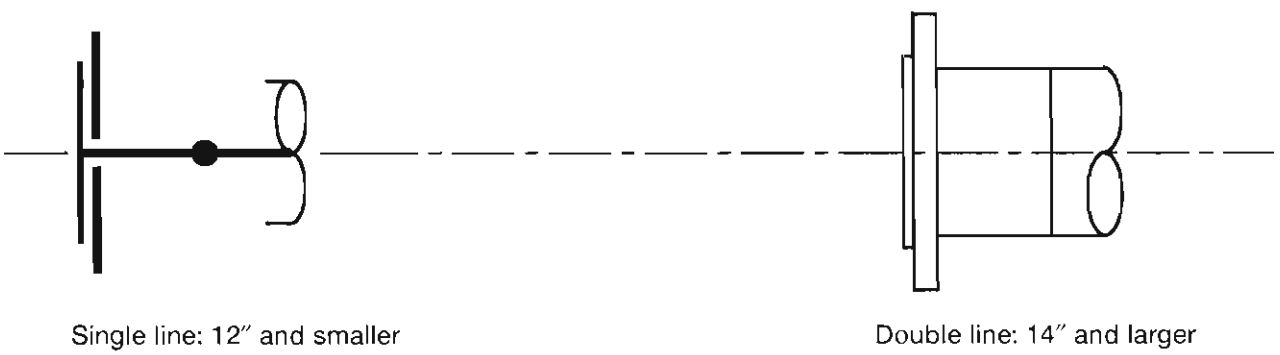

Figure 4-16. Lap-joint flange drawing symbols.

Figure 4-17. Threaded flange.

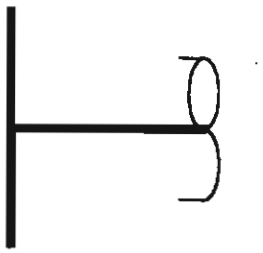

Figure 4-18. Single-line threaded flange drawing symbol.

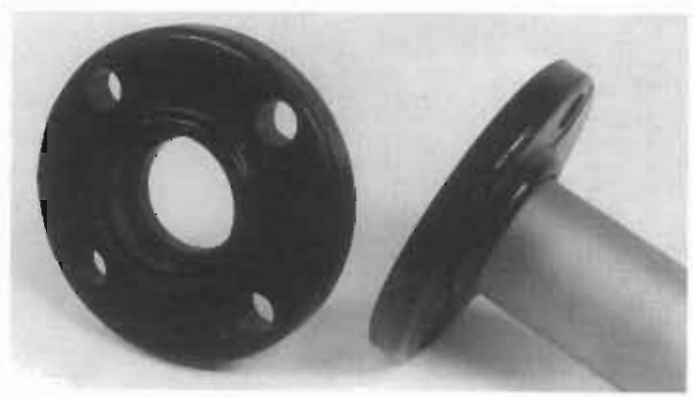

Figure 4-19. Socket weld flange.

The reducing flange maintains all the dimensional characteristics of the larger end size. One exception however is the internal bore. The internal bore is manufactured to match that of the smaller pipe size. Figure 4-22 shows a 12″ × 6″-300# raised face slip-on flange. Notice the use of abbreviations to keep the size of the callout to a minimum.

Reducing flanges are manufactured as weld neck, slip-on, or threaded flange types.

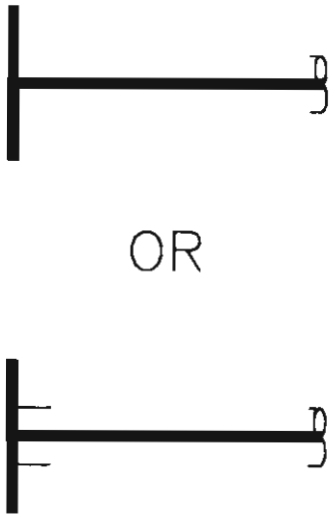

Figure 4-20. Single-line socket-weld drawing symbol.

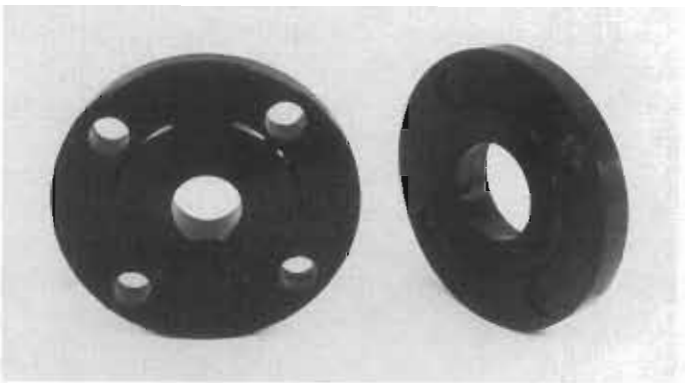

Figure 4-21. Reducing flange.

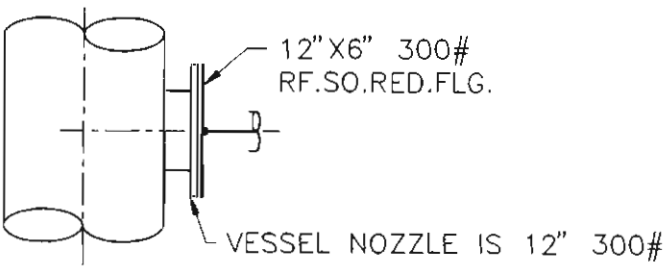

Figure 4-22. Reducing flange drawing symbol with callout.

Blind Flange

The *blind flange* depicted in Figure 4-23 serves a function similar to that of a plug or cap. It is used to terminate the end of a piping system. The blind flange is basically a flange that does not have a hub or a bored center. Blind flanges have the face thickness of a flange, a matching

face type, and similar bolting pattern. Blind flanges can also be used to seal a nozzle opening on a pressure vessel. Because it is bolted, the blind flange provides easy access to the interior of a vessel or pipe, unlike a cap that is welded. Figure 4-24 represents the drawing symbol for the blind flange.

Orifice Flange

Of the flanges discussed, the *orifice flange* (Figure 4-25) is the only one that actually performs a function. The function of the orifice flange is to measure the rate of the flow of the commodity through the piping system. Orifice flanges are easy to recognize because they have a hole drilled through the face of the flange perpendicular to the pipe. They also have an additional set of bolts called *jack screws*. These screws are used to help separate the flanges so inspection and/or replacement of the orifice plate can be performed. The orifice flange is a single component of the *orifice flange union* assembly. The orifice flange union is composed of two orifice flanges, an orifice plate, bolts, nuts, jack screws, and two gaskets.

The orifice flange union is used to measure, or meter, the amount of pressure drop through the orifice plate. The length of pipe within the piping system where orifice flanges are installed and where these measurements are recorded is known as a *meter run*. Figure 4-26 shows the orifice flange union assembly installed in a meter run.

The orifice plate, which is not typically furnished with the orifice union assembly package, looks similar to a large ring washer with a handle attached. When fully assembled, the orifice plate is sandwiched between the orifice flanges. Valve taps are inserted into pressure holes that allow for the attachment of field monitoring equipment so accurate measurements can be recorded.

Orifice flanges can be either weld neck, slip-on, or threaded. The weld neck and threaded orifice flanges are manufactured in 300# and larger pound ratings. However, the slip-on orifice flange is only available as a 300# raised face flange. The single-line and double-line drawing symbols for the orifice flange are shown in Figure 4-27.

Figure 4-23. Blind flange.

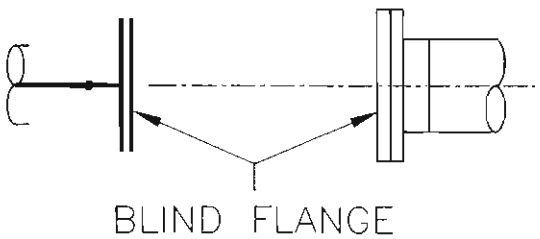

Single line: 12″ and smaller Double line: 14″ and larger
Figure 4-24. Blind flange drawing symbols.

Figure 4-25. Orifice flange.

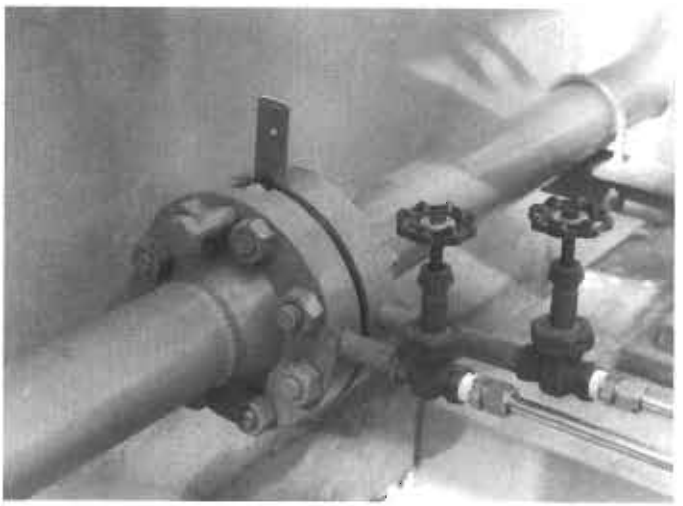

Figure 4-26. Orifice flange union assembly. Courtesy of Nisseki Chemical Texas Inc., Bayport, Texas.

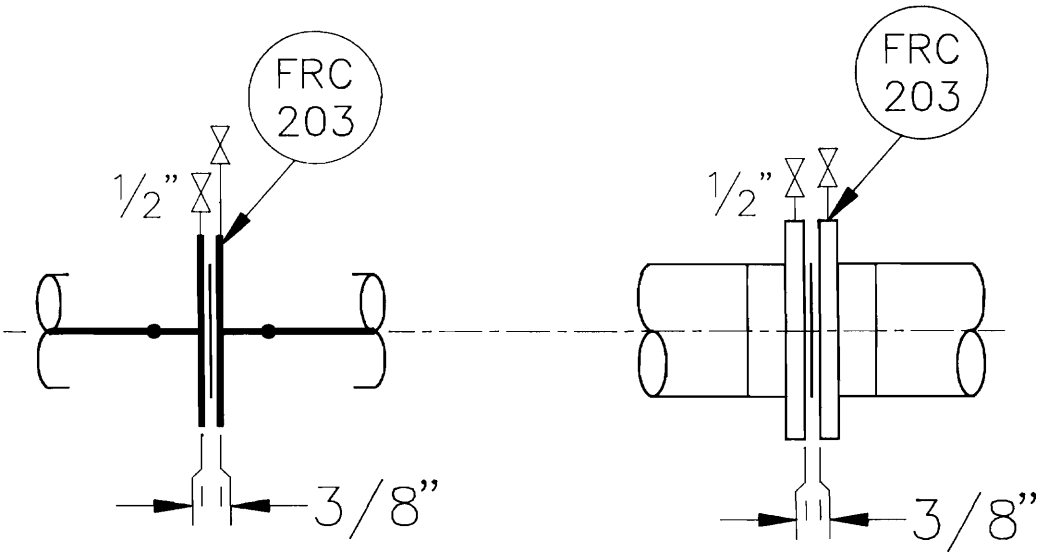

Single line: 12″ and smaller

Double line: 14″ and larger

Figure 4-27. Orifice flange drawing symbols.

BOLTS

To complete any flanged assembly, two additional items are required: bolts and gaskets. Bolts obviously hold mating flanges, nozzles, or valves together. The pressure rating of a flange will determine the size, spacing, and number of bolts required. As the nominal pipe size and pressure ratings change so will the diameter, spacing, and number of bolts.

Flanges are designed to match the bolt circle and bolt hole dimensions of other flanges that are of the same diameter and pressure rating. Bolt hole arrangements may seem inconsequential, but, when one considers the fact that components of a piping system may be fabricated in one country then shipped to another country for assembly, bolt alignments become increasingly important. It is critical that drawings convey the exact orientation of flanges to the fabricator. Otherwise, bolt holes may not align properly. ANSI standards require all flanges straddle either the horizontal, vertical, or north-south centerlines of pipe and equipment, unless otherwise noted on a drawing.

To assure that bolt holes on flanges, nozzles, or valves align properly, holes are equally spaced around the flange. One column on the Taylor Forge Forged Steel Flanges Dimensioning Chart found in Appendix A indicates the number and diameter of the bolt holes on flanges. Notice bolts are found in quantities of four, that is, 4, 8, 12, 16, etc. The following formula makes bolt hole location and alignment quick and simple.

Formula: 360° / # of holes = angular location

Example: 360°/8 (holes) = 45°

Using this formula shows holes on an eight-hole flange to be spaced 45° apart. By straddling the centerline, holes will be positioned 22½° on each side of the centerline (see Figure 4-28).

Bolts are available in two types, *machine* or *stud*. Machine bolts have a "head" on one end and threads on the other. Stud bolts have threads throughout their entire length and require the use of two nuts. Stud bolts are the most commonly used type and are available in two grades, A-193-B7 and A-193-B16. B7 grade bolts are used for temperatures to 1,000°F. B16 bolts are used when temperatures exceed 1,000°F (see Figure 4-29).

GASKETS

The primary purpose of any flanged assembly is to connect piping systems in such a manner as to produce a leak-free environment. Hazardous and combustible materials and extreme pressures and temperatures require the utmost in safety precaution. Creating a leak-proof seal between two connecting metal surfaces in an industrial setting is almost impossible. Therefore, gaskets perform a vital function in plant safety.

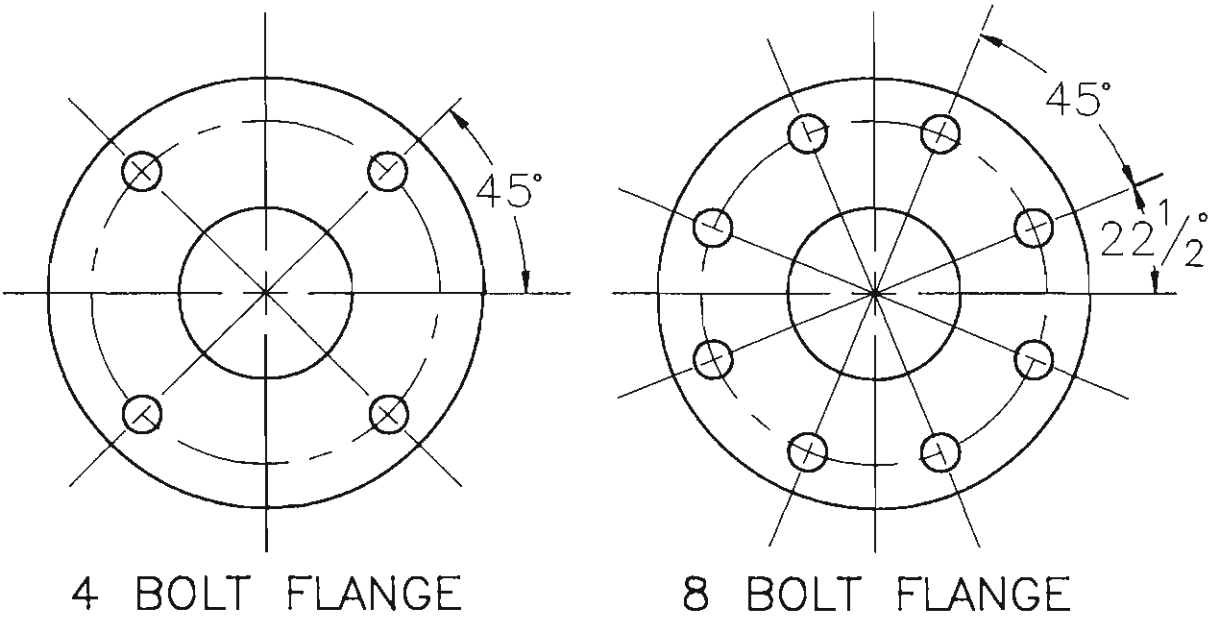

Figure 4-28. Bolt hole spacing.

Using a gasket material softer than two adjoining flanges is an excellent way to eliminate the possibility of a fluid escape. Gaskets can be made of materials such as asbestos, rubber, neoprene, Teflon, lead, or copper. When bolts are tightened and flange faces are drawn together, the gasket material will conform to any imperfections in the flange faces to create a uniform seal.

Figure 4-30 demonstrates the three types of gaskets that can be found in piping systems. They are full face, flat ring, and metal ring. Full face gaskets (Figure 4-31) are used on flat face flanges. Flat ring gaskets (Figure 4-32) are used on raised face flanges. Metal rings (Figure 4-33) are used on ring-type joint flanges.

A gasket's thickness must be accounted for when dimensioning the piping system. The typical gasket has a thickness of ⅛″ (3.175mm). At every occurrence of a flange bolting to a nozzle, two flanges joining one another, two valves joining one another, or a flange connecting to a valve, a gasket thickness must be added to the length of the pipe components. Figures 4-34 and 4-35 show that a flat-ring gasket does occupy space. Though it's only ⅛″ thick, a gasket cannot be ignored.

Figure 4-36 depicts the gap between ring-type joint flanges. The ring-type joint section of the Welded Fittings-Flanges Dimensioning Chart, gives the gap measurement as the **G** dimension. This dimension will vary

Figure 4-29. Stud and machine bolts.

Figure 4-30. Gaskets. Courtesy of Flexitallic, Inc.

Figure 4-31. Full face gaskets.

Figure 4-32. Flat ring gaskets. Courtesy of Flexitallic, Inc

Figure 4-33. Metal rings for ring-type joint flanges. Courtesy of Flexitallic, Inc.

Figure 4-34. Flat ring gasket and flange. Courtesy of Flexitallic, Inc.

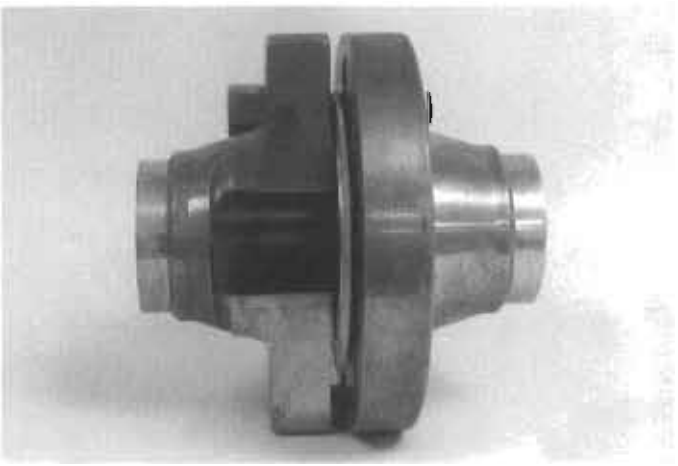

Figure 4-35. Flat ring gaskets between flanges. Courtesy of Flexitallic, Inc.

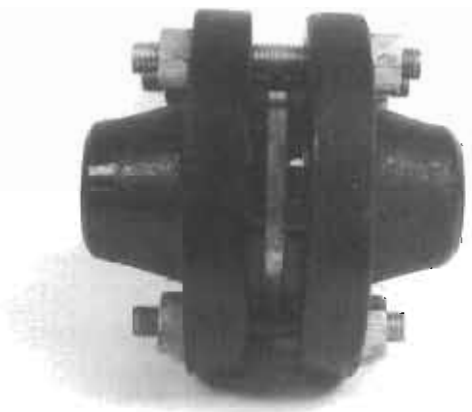

Figure 4-36. Ring-type joint gap spacing.

depending on the size and pound rating of the flange. This is an important consideration to keep in mind when dimensioning piping runs that have ring-type joint connections.

For each instance of a gasket or ring, gap spacing must be reflected in the dimensions shown on a piping drawing. *Tick* marks are used to indicate each location where a gasket or ring gap has been included in the dimensioning of the piping configuration. Tick marks are drawn approximately ⅛″ long and are placed on piping drawings near the location where a gasket or ring is to be installed. Figure 4-37 depicts two tick marks, one on each end of a valve, that have been included in the total dimension between the faces of the two flanges. The 10½″ dimension would be the sum total of one valve and two gaskets.

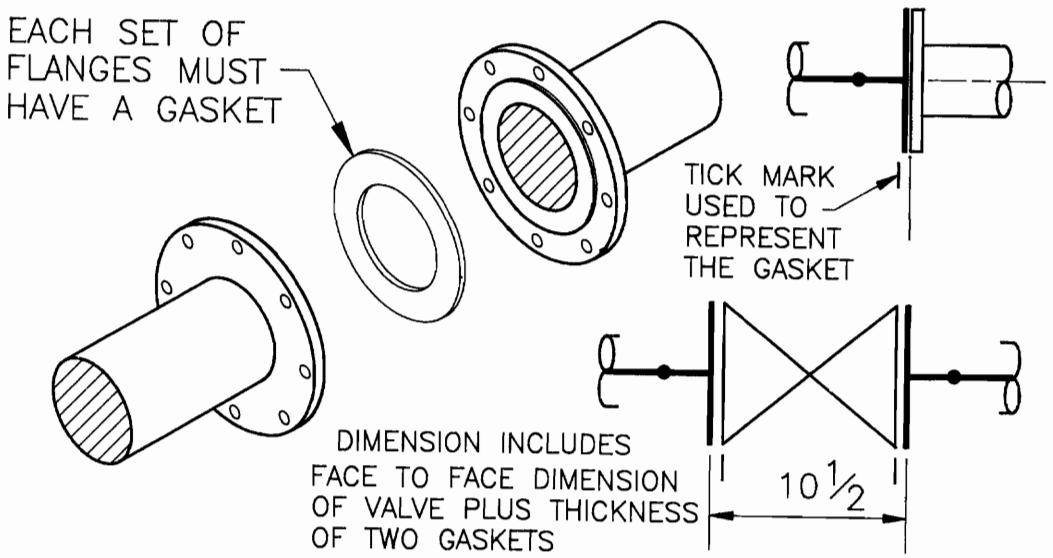

Figure 4-37. Dimensioning gaskets.

CHAPTER 4 REVIEW QUIZ

1. Name the seven forged steel flange pound ratings.

_____

_____

_____

_____

2. Name the four pressure classes for cast iron flanges.

_____

_____

_____

3. What are the three flange facings discussed in this chapter?

_____

_____

_____

4. What is the thickness of the raised face on a 600# raised-face flange?

_____

5. Briefly describe five types of flanges depicted in this chapter.

_____

_____

_____

_____

_____

6. Give O, T, and L dimensions of the following flanges.

SIZE/RATING	O	T	L
4″—150# R.F.W.N.	_____	_____	_____
6″—300# R.F.W.N.	_____	_____	_____
10″—400# R.F.W.N.	_____	_____	_____
16″—600# R.F.W.N.	_____	_____	_____
8″—600# R.F.W.N.	_____	_____	_____

7. What is the purpose of an orifice flange union?

8. Name the two types of bolts used to assemble flanges.

9. According to ANSI standards, which centerlines should flanges straddle on pipe and equipment?

10. List four materials used to manufacture gaskets.

EXERCISE INFORMATION

The fittings depicted in Figure 4-38 will be used to complete the exercises in Chapters 4, 5, and 10. To complete the exercises draw the symbols below using the following guidelines.

- Start from scratch and draw all symbols full scale.
- Draw symbols with a **PLINE** having a width of .56″ (9/16″) for single line symbols and a 0″ width for double line fittings. Symbols requiring a full circular shape must be drawn with the **PLINE** command *ARC* option. These arcs can only be drawn with a 359° circumference.
- Create weld dots with a 1.75″ diameter **DONUT**.
- Block each symbol individually using the block name indicated. (DO NOT include text with the blocked symbol.)
- Place a base point on one end of each fitting using *MIDpoint, ENDpoint*, or *CENter* **OSNAP** options.
- In the "*Block Definition*" dialog box check the *Create icon from block geometry* radio button.
- **SAVE** the file as "*FLANGES.dwg*".

After the symbols have been created and the drawing saved, start the exercise drawing and use *AutoCAD Design Center* to open the file *FLANGES.dwg*. Insert the required symbols into the appropriate locations.

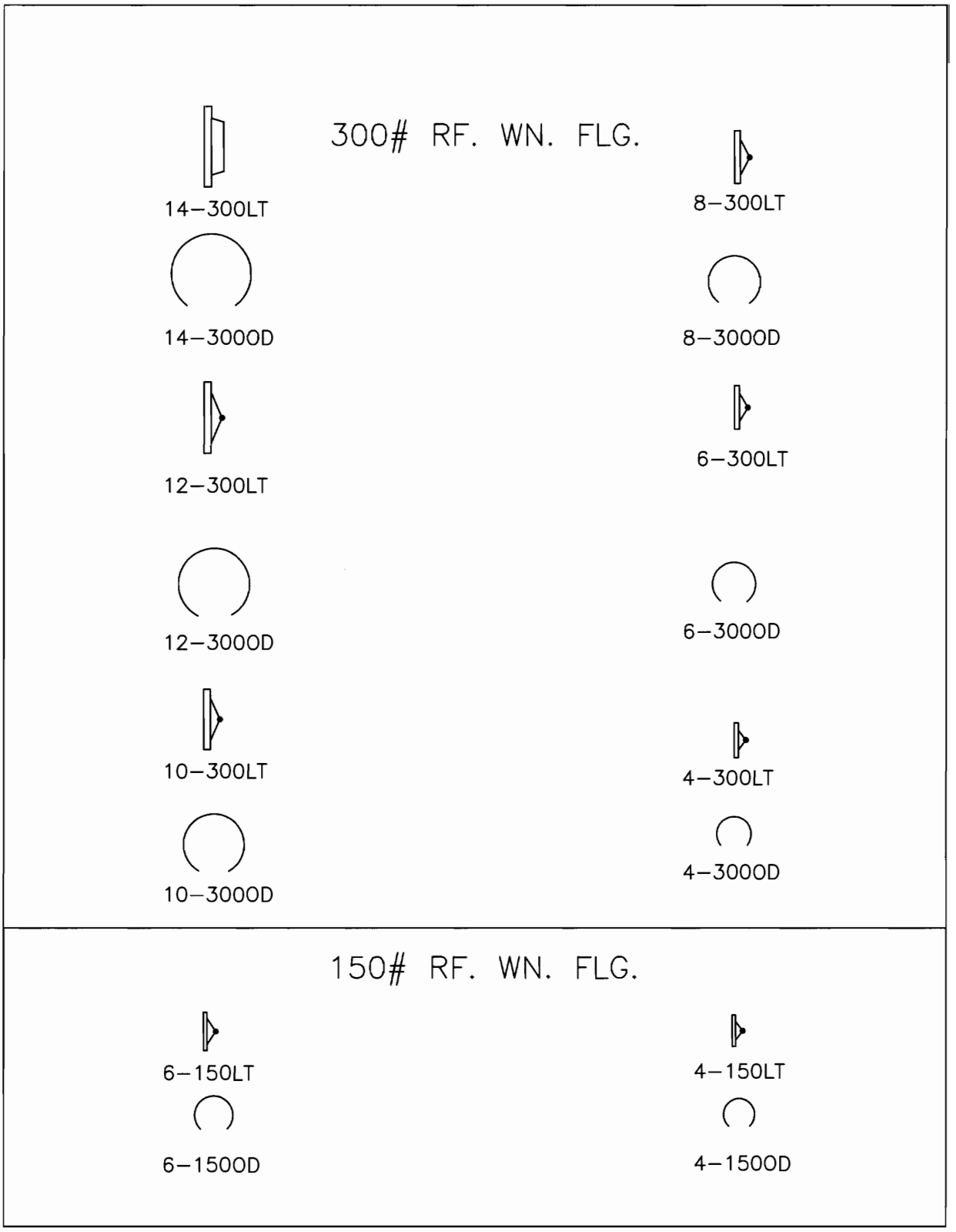

Figure 4-38. AutoCAD flange drawing and filenames.

1

DRAW ALL VIEWS AS SHOWN
12"–300# RFWN

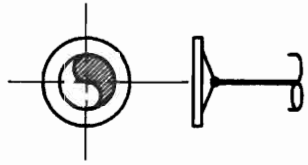

2

DRAW ALL VIEWS AS SHOWN
14"–300# RFWN

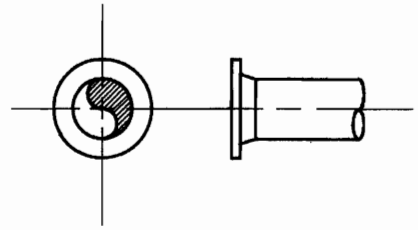

3

DRAW ALL VIEWS AS SHOWN
10"–300# RFWN

4

DRAW ALL VIEWS AS SHOWN
18"–300# RFWN

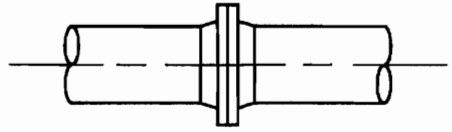

EXERCISE 4–1

FITTING MAKE-UP

DRAW ALL VIEWS AS SHOWN
14"-300# RFWN

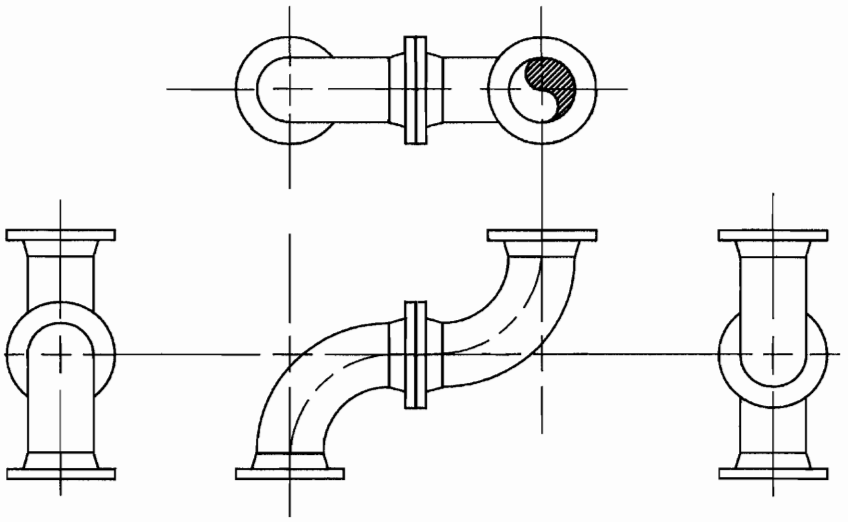

DRAW ALL VIEWS AS SHOWN
12"-300# RFWN

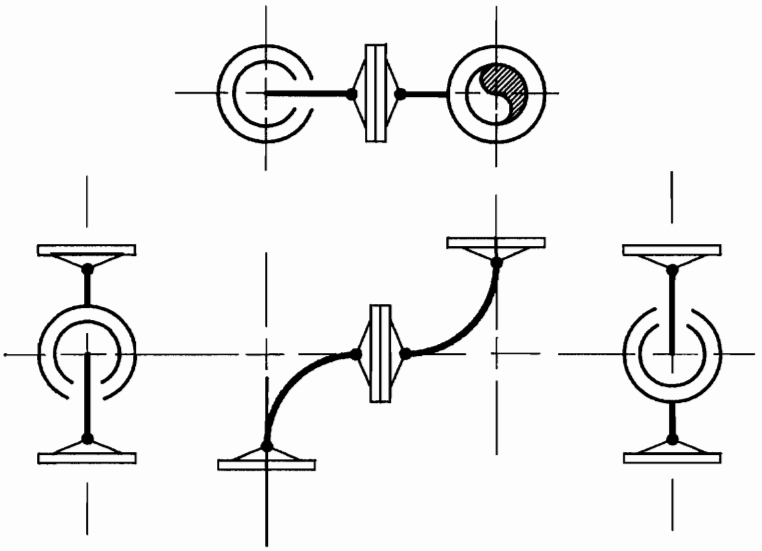

EXERCISE 4-2

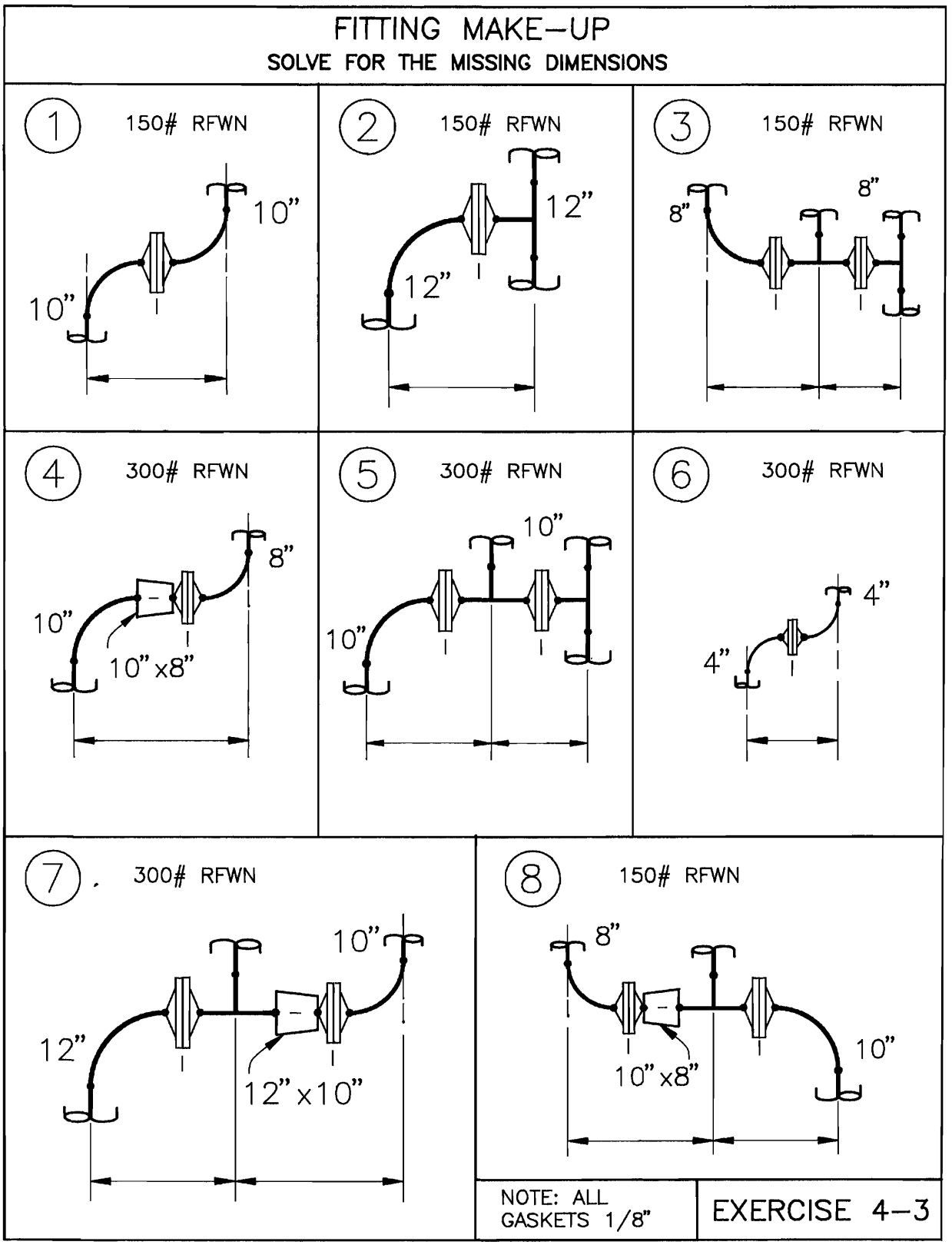
FITTING MAKE-UP
SOLVE FOR THE MISSING DIMENSIONS
1
150# RFWN
10"
10"
2
150# RFWN
12"
12"
3
150# RFWN
8"
8"
4
300# RFWN
8"
10"
10" x8"
5
300# RFWN
10"
10"
6
300# RFWN
4"
4"
7
300# RFWN
10"
12"
12" x10"
8
150# RFWN
8"
10"
10" x8"
NOTE: ALL GASKETS 1/8"
EXERCISE 4-3

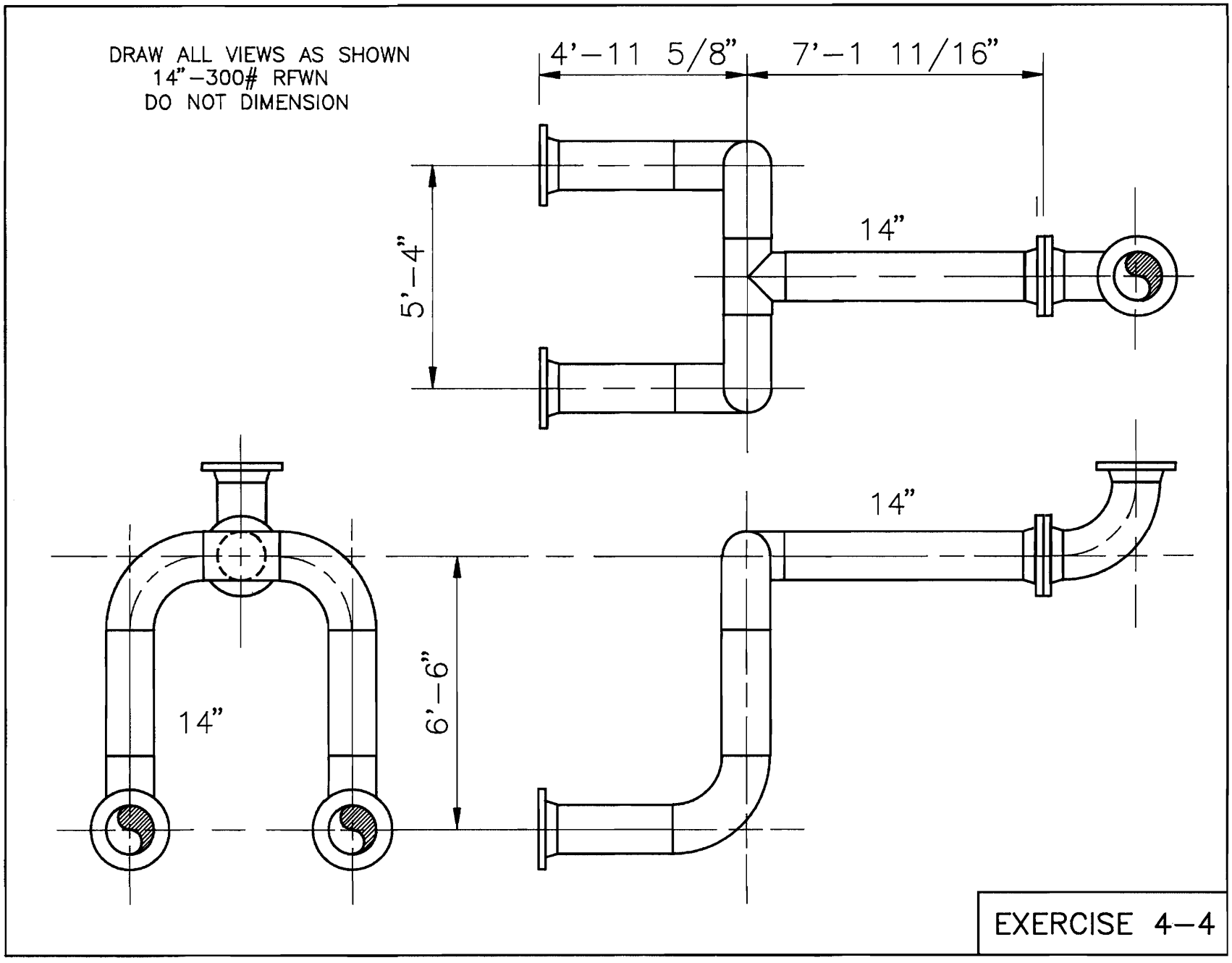
DRAW ALL VIEWS AS SHOWN
14"–300# RFWN
DO NOT DIMENSION
4'–11 5/8"
7'–1 11/16"
5'–4"
14"
14"
14"
6'–6"
EXERCISE 4–4

Valves

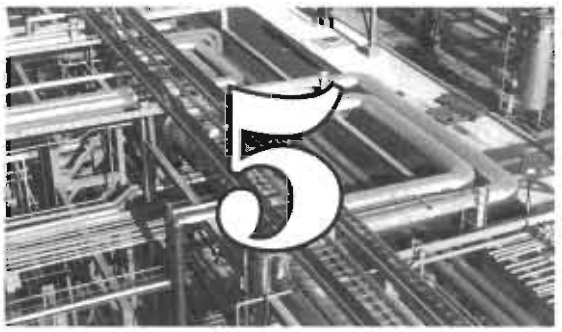

WHAT IS A VALVE?*

A valve is a product rarely noticed by the average person, yet it plays an important role in the quality of our lives. Each time you turn on a water faucet, use your dishwasher, turn on a gas range, or step on the accelerator in your car you operate a valve. Without modern valve systems there would be no fresh, pure water in your home, no modern appliances, and no gasoline waiting at the corner service station.

One of the most widely observed, but least recognized, type of valve is the fire hydrant. Fire hydrants are connected to municipal water supply systems. They are specialized in that they are underground valves that can be opened and closed from an above-ground location when needed in emergency situations.

By definition, a valve is a device that controls the flow of a fluid. But today's valves can control not only the flow, but also the rate, the volume, the pressure, and the direction of a fluid within a pipe. Valves are not limited to fluids. They can control liquids, gases, vapors, slurries, or dry materials. Valves can turn on or off, regulate, modulate, or isolate. They can range in size from a fraction of an inch to as large as 30 feet in diameter and can vary in complexity from a simple brass valve, available at the local hardware store, to a precision-designed, highly sophisticated coolant system control valve made of exotic metal alloy used in a nuclear reactor. Valves also can control the flow of all types of commodities. From the thinnest gas to highly corrosive chemicals, from superheated steam to toxic gases, from abrasive slurries to radioactive materials, valves can be designed to service them all. They can handle temperatures from the cryogenic region to molten metal exceeding 1500°F, and valves can contain pressures ranging from severe vacuum to 20,000 pounds per square inch.

The valve is one of the most basic and indispensable components of our modern technological society. As long

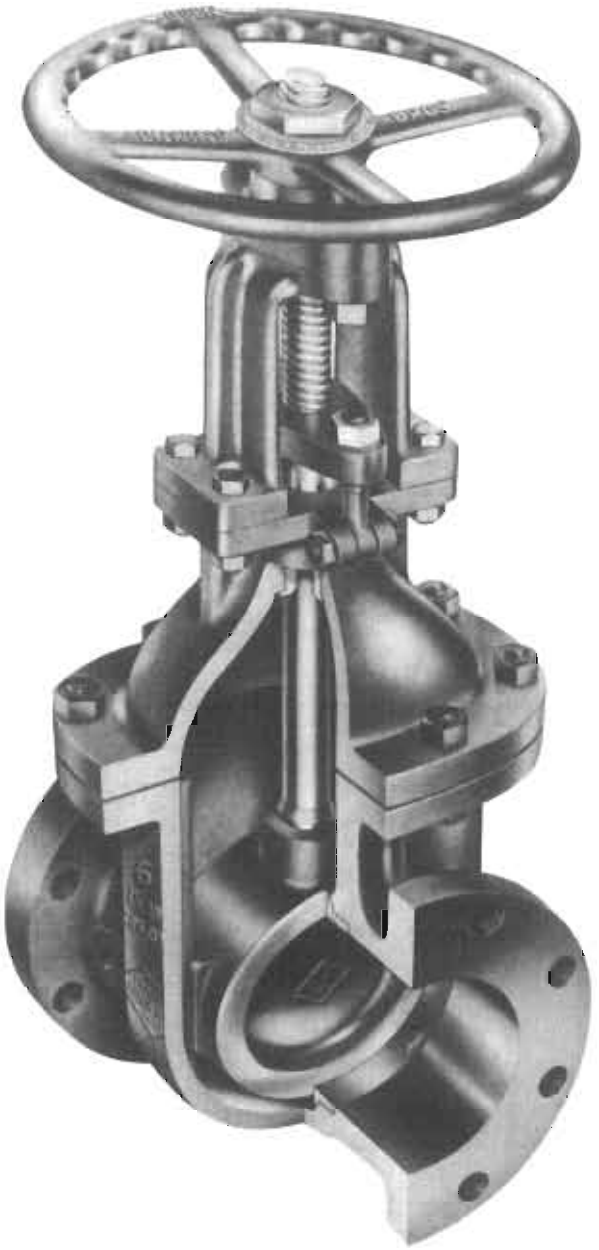

Figure 5-1. Gate valve. Courtesy of Jenkins Bros.

*"What is a Valve?" Courtesy of VMA (Valve Manufacturers Association).

as industries continue to devise new reasons to control gases, liquids, and even solids, valve design will continue to meet the demand.

COMMON VALVE TYPES

Valves are manufactured in numerous sizes, body styles, and pound ratings to meet a wide variety of application needs. Valves are also manufactured with varying types of end preparations that allow them to be readily mated to flanges or pipe of the same size and rating. Valve end preparations can be screwed, socket-weld, beveled, or flanged. Flanged valves are manufactured to have either raised, flat, or ring-type joint faces.

Gate Valves

The gate valve is the most frequently used valve in piping systems. It is a general service valve that is used primarily for on-off, non-throttling applications. When fully opened, the gate valve creates minimal obstruction to the flow. Gate valves control the commodity flowing through the pipe with a flat, vertical wedge, or gate, that slides up or down as the valve's handwheel is turned. As the handwheel is rotated, the wedge will slide through the valve body to block or release the flow.

Designed to be either fully opened or closed, the gate valve should not be operated in a partially opened/closed position. A partially opened gate valve will hasten erosion caused by the commodity within the pipe and will ruin the valve seat in a short period of time. Turbulence from the commodity will also cause the wedge to vibrate creating a "chattering" noise when the valve is partially opened. Figure 5-1 depicts the external and internal views of a typical gate valve.

As with pipe, fittings, and flanges, valves are represented by symbols on piping drawings. These symbols are developed in such a manner as to describe the valve's body style, end type, and handwheel orientation. Symbol sizes are established from dimensions provided in manufacturers' catalogs or data sheets. Three dimensions are crucial when drawing a valve symbol: face-to-face, handwheel height, and handwheel diameter (see Figure 5-2).

VALVES — **150#**

NOMINAL PIPE SIZES (in)		2"	3"	4"	6"	8"	10"	12"	14"	16"	18"
O.D. of PIPE		$2\frac{3}{8}$	$3\frac{1}{2}$	$4\frac{1}{2}$	$6\frac{5}{8}$	$8\frac{5}{8}$	$10\frac{3}{4}$	$12\frac{3}{4}$	14	16	18
VALVES – GATE	L	7	8	9	$10\frac{1}{2}$	$11\frac{1}{2}$	13	14	15	16	17
	H	$15\frac{3}{4}$	$20\frac{3}{4}$	$25\frac{3}{4}$	$35\frac{1}{4}$	44	$52\frac{1}{2}$	$60\frac{1}{2}$	$70\frac{1}{4}$	$79\frac{3}{4}$	89
	O	8	9	10	14	16	18	18	22	24	27
VALVES – GLOBE	L	8	$9\frac{1}{2}$	$11\frac{1}{2}$	16	$19\frac{1}{2}$	*	*	*	*	*
	H	$13\frac{3}{4}$	$16\frac{1}{2}$	$19\frac{3}{4}$	$24\frac{1}{2}$	26	*	*	*	*	*
	O	8	9	10	12	16	*	*	*	*	*
VALVES – CONTROL	L	10	$11\frac{3}{4}$	$13\frac{7}{8}$	$17\frac{3}{4}$	$21\frac{3}{8}$	$26\frac{1}{2}$	*	*	*	*
	H	$27\frac{7}{8}$	$28\frac{7}{16}$	$29\frac{7}{16}$	38	$39\frac{1}{4}$	$46\frac{1}{4}$	*	*	*	*
	O	$13\frac{1}{8}$	$13\frac{1}{8}$	$13\frac{1}{8}$	16	16	$21\frac{1}{8}$	*	*	*	*
VALVES – CHECK	L	8	$9\frac{1}{2}$	$11\frac{1}{2}$	14	$19\frac{1}{2}$	$24\frac{1}{2}$	$27\frac{1}{2}$	35	39	*
	H	5	6	7	9	$10\frac{1}{4}$	$12\frac{1}{8}$	$13\frac{3}{4}$	18	$20\frac{1}{2}$	*

NOTE: ALL DIMENSIONS ARE IN INCHES
* REFER to VENDOR CATALOG

150# RF

Figure 5-2. Flanged valve dimensioning chart.

The length of a valve is represented on most dimensioning charts as the *face-to-face* dimension. The face-to-face dimension is a length that is standard among valve manufacturers and defines the length of a valve from one end to the other. Also important is the height and diameter of a valve's handwheel. These measurements are necessary to establish operational clearances and worker accessibility around the valve. Of particular importance is the valve's *open* handwheel height. This dimension defines the maximum height of the valve when it is in the full-open position. The open handwheel height is measured from the centerline of the valve body to the tip of the valve *stem*.

The valve stem is a threaded rod that connects the valve's wedge or gate to the handwheel. Valve stems fall into one of two categories: rising or nonrising. A rising stem is one in which the stem raises and lowers as the handwheel is rotated. The handwheel remains in a stationary position as the stem passes through it. On valves having a nonrising stem, the handwheel is attached to the end of the stem and moves up and down with the stem as the valve is opened or closed.

The length of a rising stem must be determined before the handwheel is represented on a drawing. When the valve is fully opened the stem is at its highest point. The maximum distance the stem will extend above the handwheel is approximately equal to the nominal size of the pipe. Knowing the length of the stem allows a piping designer to draw the valve symbol with the handwheel located the proper distance from the end of the stem and also to determine when interference problems may occur.

Another important dimension is the diameter of the flanged faces on flanged valves. When representing flanged valves, the diameter of the valve's flanges must be drawn to match the size and pound rating of the flange or nozzle to which it is being bolted. Because most valve dimensioning charts do not provide this information, a drafter must refer to the flange dimensioning chart to find the proper flange OD measurements.

Valve symbols vary from company to company and client to client. It is therefore imperative that a drafter be familiar with the symbols being used on a project before work begins on drawings associated with that new project. The symbols shown in this text are typical of those found on many piping drawings. They should not be considered standard for all applications, however. The symbols shown in Figure 5-3 represent screwed, socket-weld, and flanged gate valves. Notice also the two methods of representing handwheels.

Drawing the Gate Valve

Figures 5-4 and 5-5 represent the step-by-step procedures to draw a 10″-300# RFWN gate valve symbol using manual and **AutoCAD** methods of construction, respectively. Symbols depicting other valve styles can be developed using similar construction methods but with minor changes or alterations.

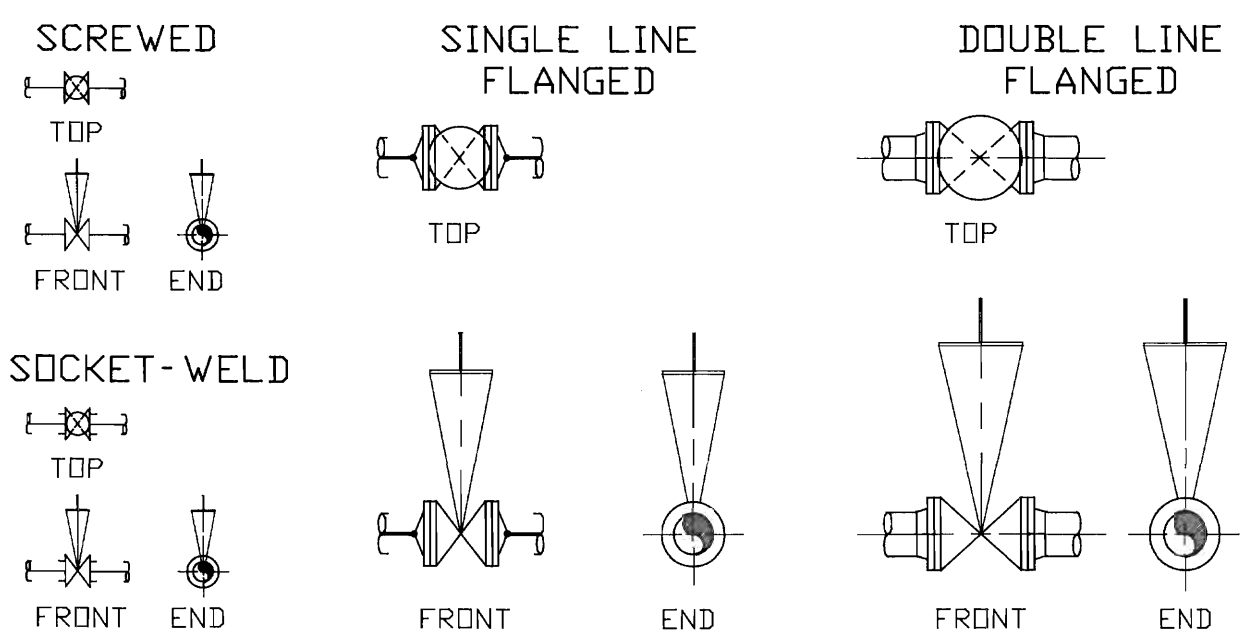

Figure 5-3. Gate valve drawing symbols.

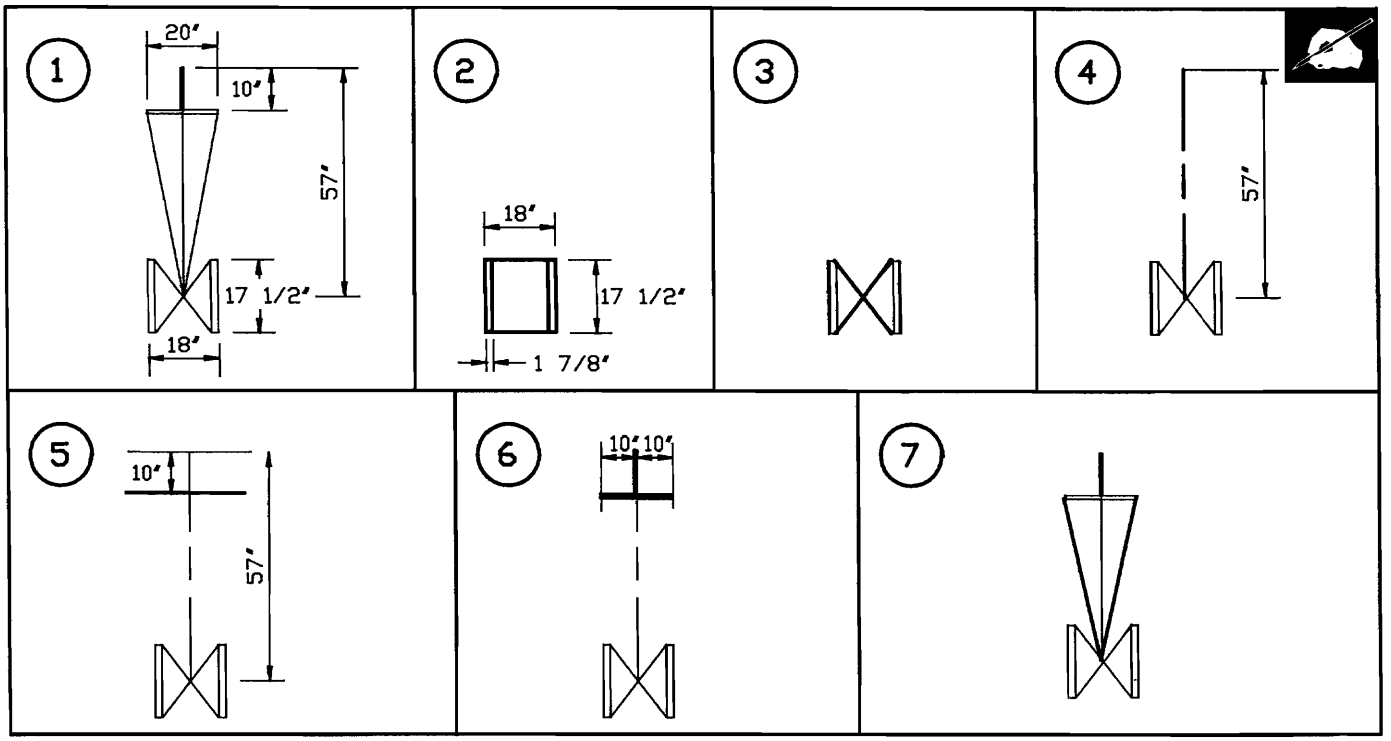

Figure 5-4. Gate valve. Manual drafting solutions.

Step 1. Using the appropriate vendor's catalog, determine the overall dimensions of a 10"-300# RFWN gate valve, that is, face-to-face (18"), handwheel height (57") and diameter (20"), and flange diameter (17½").

Step 2. Lightly draw a rectangle having the width of the face-to-face (18") dimension and the height of the flange diameter (17½"). Draw two lines 1⅞" (flange face thickness) inside the two vertical lines.

Step 3. Draw diagonal lines across the corners of the inside lines. Erase the horizontal lines of the inside lines. Darken the lines representing the valve's body.

Step 4. From the intersection of the diagonal lines, draw a centerline parallel to the ends of the valve the length of the handwheel height (57").

Step 5. Place a point on the centerline 10" down from the end. Draw a line perpendicular to the centerline (10" is equal to the nominal pipe size).

Step 6. Measure one-half (10") of the handwheel's diameter (20") on either side of the handwheel centerline. Draw a double width line to represent the thickness of the handwheel.

Step 7. To complete the handwheel representation, draw a line from each end of the handwheel to the intersecting diagonal lines of the valve body.

Globe Valves

Globe valves are used primarily in situations where throttling of the commodity is required. By simply rotating the handwheel, the rate at which the commodity flows through the valve can be adjusted to any desired level. Having the valve seat parallel to the line of flow is an important feature of the globe valve. This feature makes the globe valve efficient when throttling commodities as well as yielding minimal disc and seat erosion. This configuration, however, creates a large amount of resistance within the valve. The design of the globe valve body forces the flow of the commodity to change direction within the valve itself. This change in direction creates substantial pressure drop and turbulence. The globe valve is therefore not recommended when flow resistance and pressure drop are to be avoided. Figure 5-6 depicts the internal view of a globe valve.

Drawing symbols of the globe valve are similar to those of the gate valve. Measurements used to draw the valve are found on manufacturers' dimensioning charts. One noticeable difference is the use of a darkened circle

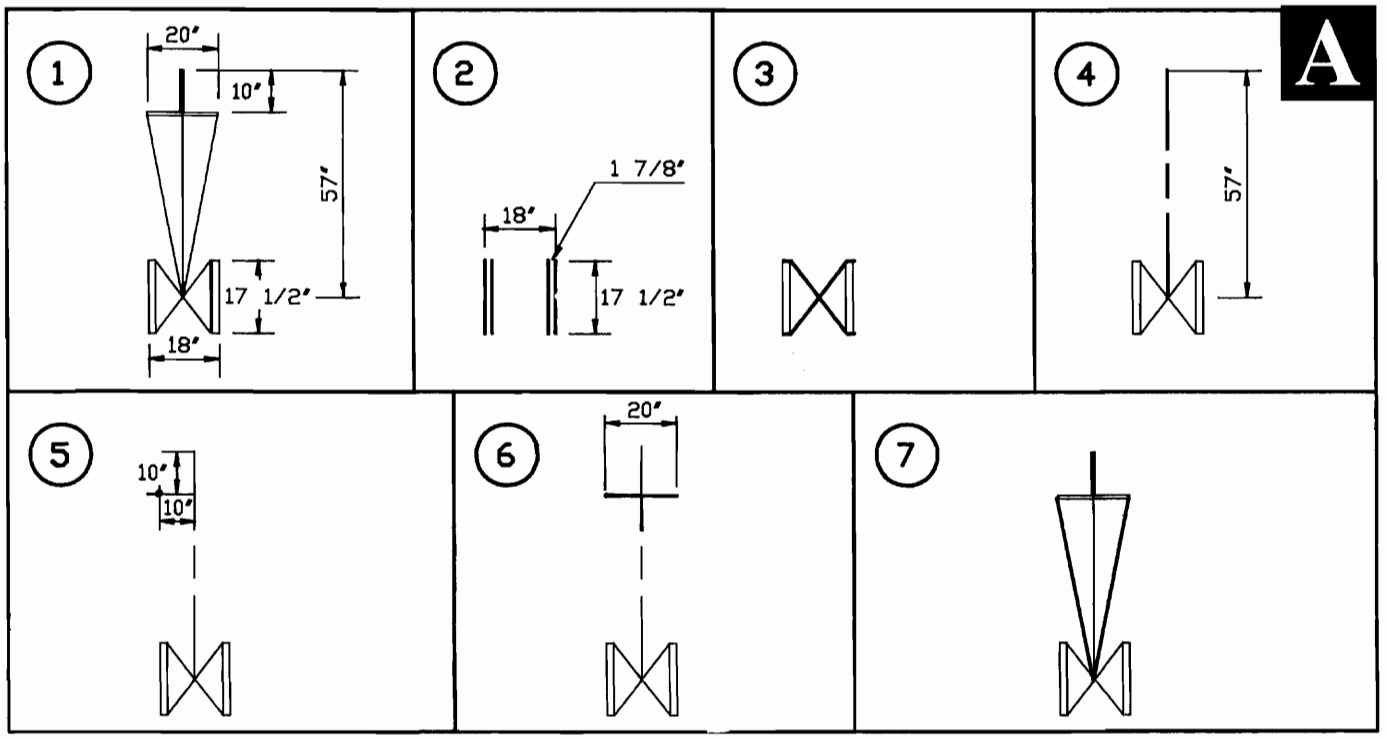

Figure 5-5. Gate valve. **AutoCAD** drawing commands.

Drawing set-up

Set **LINETYPE** to *Continuous*
Set **LIMITS:** lower left corner - (0,0)
upper right corner - (20,20)
ZOOM, *All*

Step 1. Using the appropriate vendor's catalog, determine the dimensions of a 10"-300# RFWN gate valve, that is, face-to-face (18"), handwheel height (57") and diameter (20"), and flange diameter (17½").

Step 2. Draw a vertical **LINE** having the length of the flange diameter (@0,17½"). **OFFSET** the vertical line a distance equal to the face-to-face distance (18"). From each end of the valve, **OFFSET** the flange face thickness (1⅞") inward.

Step 3. Using **OSNAP** *ENDpoint*, draw diagonal **LINES** from the ends of the vertical lines to create the valve body.

Step 4. Set **LINETYPE** to *Center*. From the intersection of the diagonal lines, draw a vertical **LINE** the length of the handwheel, height (@0,57").

ZOOM, *Extents*

Step 5. Place a **POINT** 10" to the left (one-half of the handwheel's diameter) and 10" down from the end (distance equal to the pipe's nominal size) of the handwheel's centerline (@-10",-10").

Step 6. Set **LINETYPE** to *Continuous*. Draw a **PLINE**, .015" thick, perpendicular to the handwheel's centerline, 20" to the right (@20",0") to represent the valve's handwheel.

Step 7. From each end of the handwheel, draw a **LINE** to the intersecting diagonal lines of the valve's body.

positioned at the intersection of the diagonal lines in the valve's body. One other difference, though not quite as noticeable, is the use of a nonrising stem on globe valves. Drawing symbols for globe valves are shown in Figure 5-7.

Angle Valves

The angle valve, like the globe valve, is used for throttling. As shown in Figure 5-8, the flow entering the valve and the flow leaving the valve form a 90° angle. In the event a pipe is making a 90° turn, the angle valve is used to eliminate the need for a 90° elbow and additional fittings.

Angle valves as well as globe valves are typically installed so a commodity will flow in an upward direction through the valve body. This upward flow direction will keep pressure under the disc seat. Pressure from below the seat promotes easier operation and reduces the erosive action on the seat and disc. For high temperature commodities however, such as superheated steam, the flow direction is reversed. When the valve is closed, temperature on the lower side of the disc is significantly higher

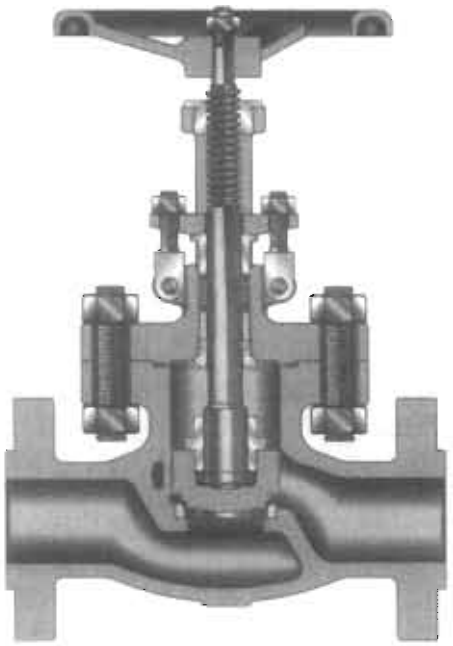

Figure 5-6. Globe valve. Courtesy of VELAN

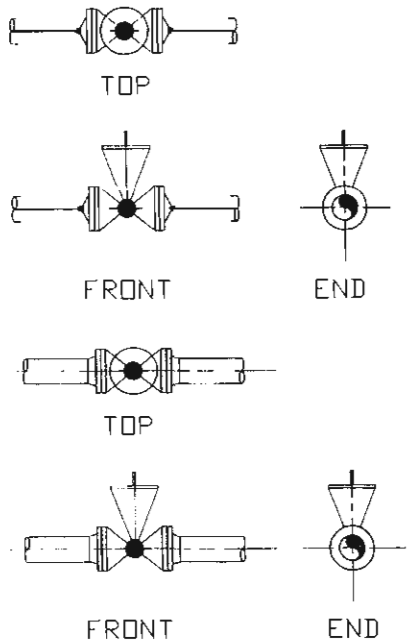

Figure 5-7. Globe valve drawing symbols.

than that on the upper side. Because the valve's stem is on the upper side of the disc, it will be cooler. This temperature differential causes the valve stem to contract, lifting the disc off the seat. This lifting action will result in the seat and disc faces being scored. To avoid this problem, valve manufacturers recommend installing globe and angle valves so high temperature commodities flow into the valve from the upper side. This flow direction will keep pressure above the disc, forcing it into the seat and creating a tighter seal. Figure 5-9 depicts the drawing symbols for the angle valve.

Check Valves

Check valves differ significantly from gate and globe valves. Check valves are designed to prevent backflow. Backflow simply means flow that has reversed itself within a pipe and begins to flow backwards. There are many designs of check valves, but the two most common types are the *swing check* and the *lift check*. Check valves do not use handwheels to control the flow of a commodity but instead use gravity and the pressure of the commodity to operate the valve (see Figure 5-10).

The swing check valve is installed as a companion valve to the gate valve. As the name implies, this valve has a swinging gate that is hinged at the top and opens as a commodity flows through the valve. When the valve disc is in the open position, a clear flow path is created through the valve. This clear path creates minimal turbulence and pressure drop within the valve. Pressure must always be under the disc for the valve to function properly. When flow reverses, the pressure and weight of the commodity against the disc will force the disc against the seat, stopping all backflow. Check valves are often regarded as safety or precautionary equipment.

The lift check valve is often installed with the globe valve. Figure 5-10 shows the lift check valve has a body style similar to the globe valve. As flow enters the valve, the disc is lifted up off the seat to allow flow to pass. As with the globe valve, there is significant turbulence and pressure drop.

There are two types of lift check valves: *horizontal* and *vertical*. Both of these valves use either a disc or ball and the force of gravity to close the valve in the event of reverse flow. The horizontal lift check valve has a seat that lies parallel to the flow. The result is an *S*-type body style that mandates the valve be installed in the horizontal position only and have flow that enters from below the seat. Flow entering the valve raises the disc or ball off the seat permitting the commodity to pass through the valve body.

The vertical lift check valve is designed to work automatically on flow that is traveling in an upward direction only. Similar to the horizontal lift check, vertical lift check valves use a disc or ball that raises off the seat when a commodity flows upward through the valve. When flow stops, gravity will reseat the disc or ball preventing backflow. This check valve requires the outlet end of the valve to always be installed in the *up* position.

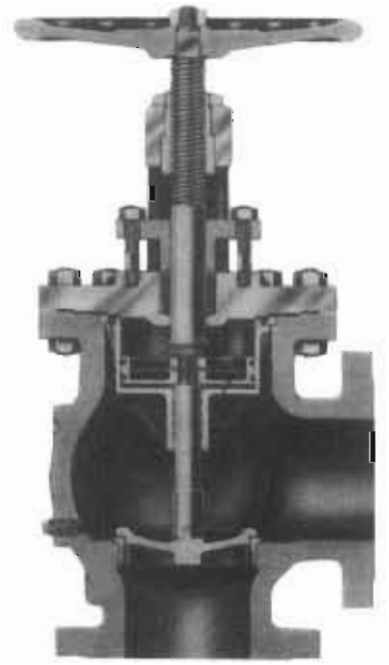

Figure 5-8. Angle valve. Courtesy of Jenkins Bros.

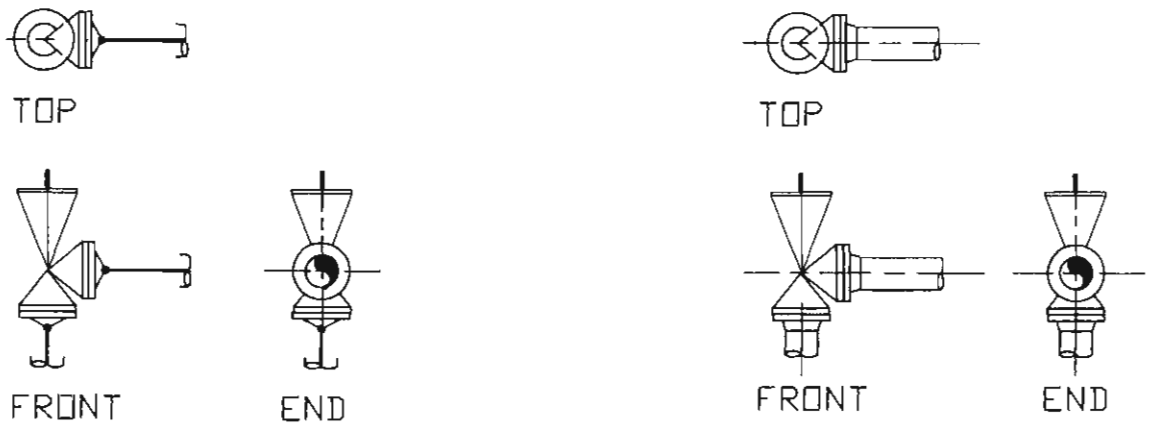

Figure 5-9. Angle valve drawing symbols.

Some manufacturers refer to lift check valves that employ the use of a ball as a *ball check* valve. Figure 5-11 depicts drawing symbols used to represent the check valve. Notice the top and front views are identical and both symbols indicate the direction of flow.

Ball Valves

The ball valve is an inexpensive alternative to other valves. Ball valves use a metal ball with a hole bored through the center, sandwiched between two seats to control flow. Used in many hydrocarbon process applications, ball valves are capable of throttling gases and vapors and are especially useful for low flow situations. These valves are quick opening and provide a very tight closure on hard to hold fluids (see Figure 5-12).

Ball valves do not use a handwheel but instead use a wrench to control the flow. A 90° turn of the wrench opens or closes the valve. This simple design yields a nonsticking operation that produces minimal pressure drop when the valve is in its full-open position. Drawing symbols for the ball valve are shown in Figure 5-13.

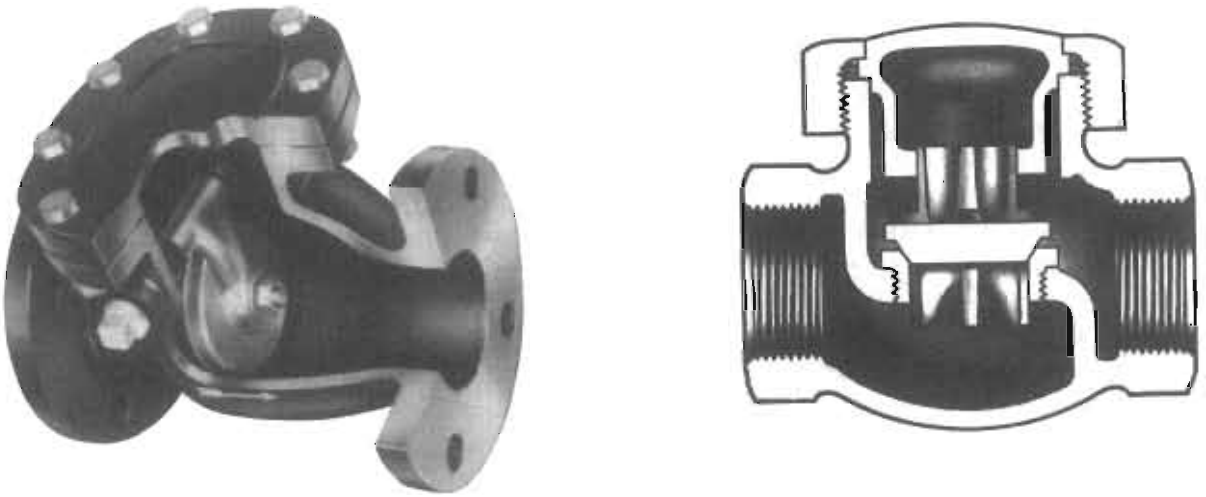

Figure 5-10. Swing and lift check valves. Courtesy of Crane Co.

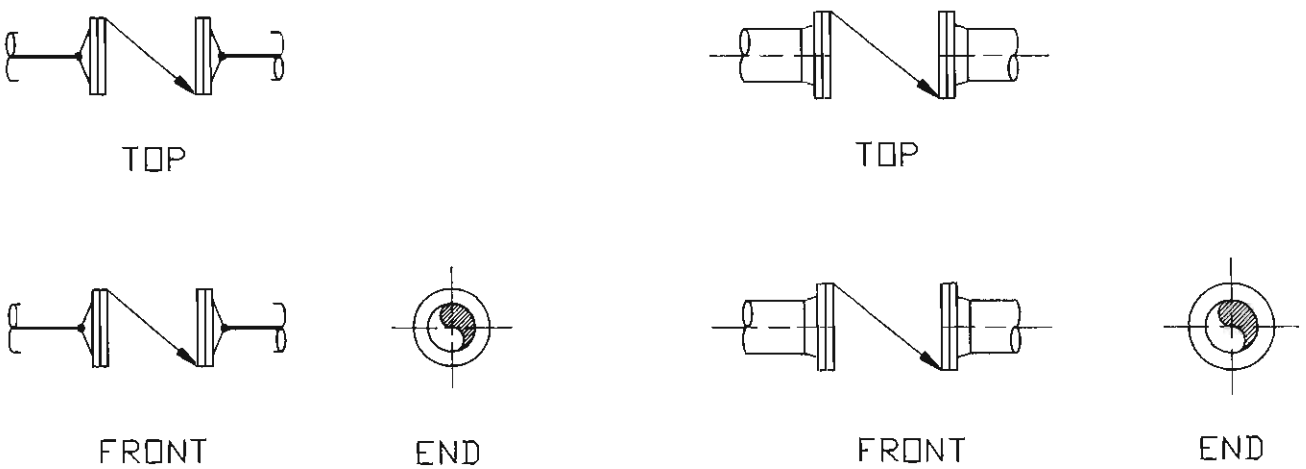

Figure 5-11. Check valve drawing symbols.

Plug Valves

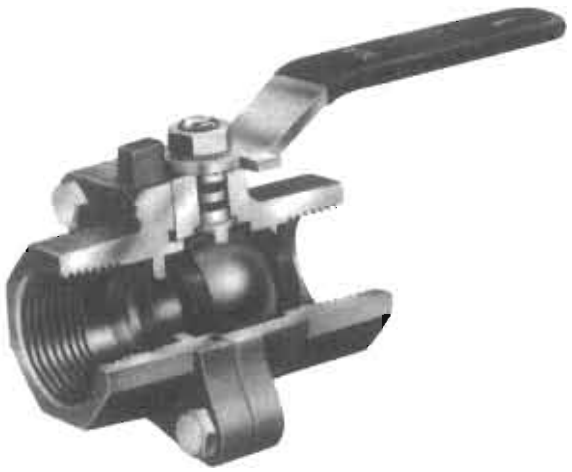

Figure 5-12. Ball valve. Courtesy of Jenkins Bros.

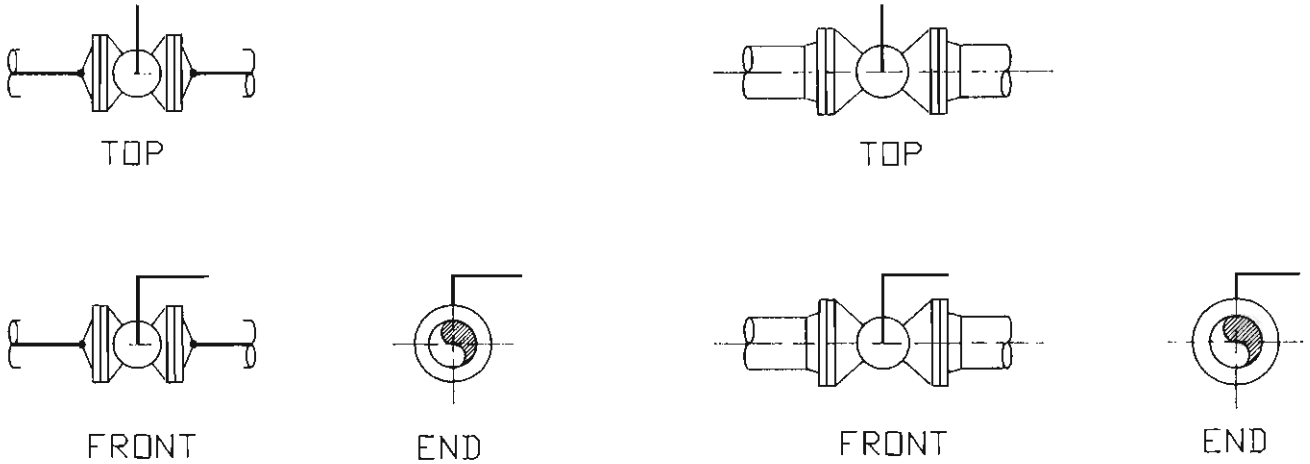

Figure 5-13. Ball valve drawing symbols.

Unlike other valves, the plug valve uses either a handwheel or wrench to operate the valve. Plug valves provide a tight seal against hard to hold commodities and requires a minimum amount of space for installation. Unlike the ball valve, the plug valve uses a tapered wedge rather than a ball to create a seal. This wedge, or plug, has an elongated opening, which when placed in the *open* position, allows the commodity to pass through the valve. The plug is the only movable part of the valve and its tapered shape assures positive seating (see Figure 5-14).

Plug valves are designed with etched grooves along the tapered plug to permit a lubricant to seal and lubricate the internal surfaces as well as to provide a hydraulic jacking force to lift the plug within the body, thus permitting easy operation. The clear and open passageway through the valve body provides little opportunity for scale or sediment to collect. In fact, the plug seats so well that as the plug is rotated, foreign debris is wiped from the plug's external surfaces. These valves, however, do require constant lubrication to maintain a tight seal between plug and body. Figure 5-15 depicts drawing symbols used to represent the plug valve.

Butterfly Valve

The butterfly valve has a unique body style unlike the other valves we have discussed. The butterfly uses a circular plate or wafer operated by a wrench to control flow. A 90° turn of the wrench moves the wafer from a fully open position to a fully closed position. The wafer remains in the stream of flow and rotates around a shaft connected to the wrench. As the valve is being closed, the wafer rotates to become perpendicular to the direction of flow and acts as a dam to reduce or stop the flow. When the wrench is rotated back to the original position, the wafer aligns itself with the direction of flow and allows the commodity to pass through the valve (see Figure 5-16).

Butterfly valves have minimal turbulence and pressure drop. They are good for on-off and throttling service and perform well when controlling large flow amounts of liquids and gases. However, these valves do not normally create a tight seal and must be used in low-pressure situations or where some leakage is permissible. Drawing symbols for the butterfly valve are shown in Figure 5-17.

Figure 5-14. Plug valve. Courtesy of Stockham Valves.

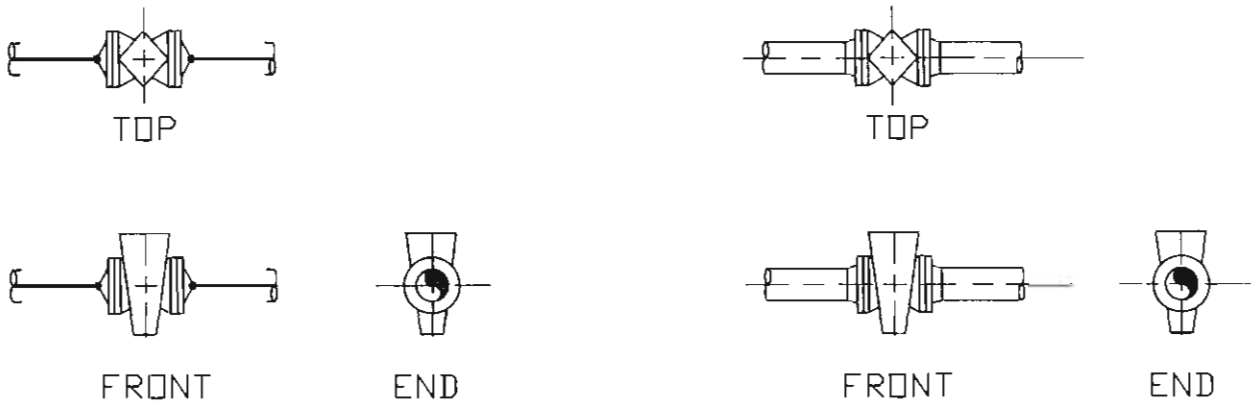

Figure 5-15. Plug valve drawing symbols.

Figure 5-16. Butterfly valve. Courtesy of Crane Co.

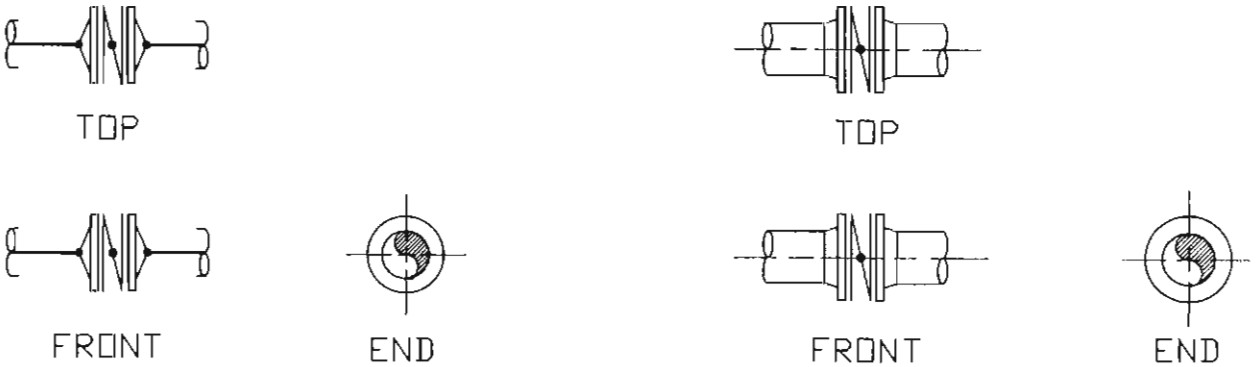

Figure 5-17. Butterfly valve drawing symbols.

Relief Valves

Relief valves have a purpose quite different from the previous valves. They are designed to release excessive pressure that builds up in equipment and piping systems. To prevent major damage to equipment, and more importantly, injury to workers, relief valves can release elevated pressures before they become extreme. Relief valves use a steel spring as a means to automatically open when pressures reach unsafe levels. These valves can be adjusted and regulated to *pop off* when internal pressures exceed predetermined settings. Once internal pressures return to operational levels, the relief valve closes. Figure 5-18 shows the internal mechanism of a relief valve.

Another valve that performs the same basic function as the relief valve is the *pressure safety valve*. Although similar in design and appearance, the two valves operate differently. Relief valves are used in piping systems that

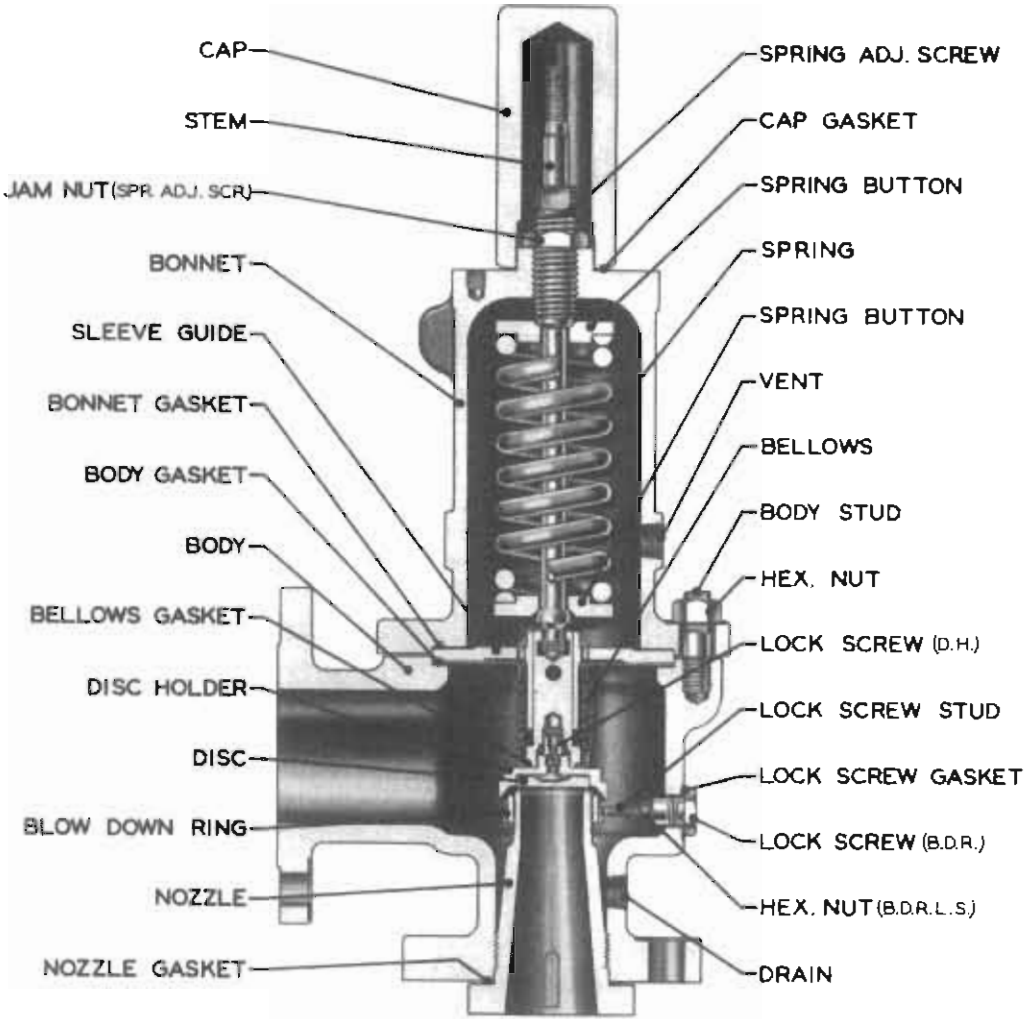

Figure 5-18. Relief valve. Courtesy of Farris Safety-Relief Valves.

service liquid commodities and are designed to open proportionally, that is, as pressure from the commodity increases so does the opening of the valve. The higher the pressure, the greater the opening. The pressure safety valve, however, is used with higher pressure commodities such as steam and gas. Pressure safety valves are designed to open completely when internal pressures exceed the setting for which the internal spring has been set. As with the relief valve, once internal pressures return to operational levels the valve will close itself. Figure 5-19 provides drawing symbols used to represent the relief valve and pressure safety valve.

Control Valves

The control valve is an automated valve that can make precise adjustments to regulate and monitor any commodity flowing through a piping system. The most common valve body style used as a control valve is the globe valve. Although many other body styles are used, the globe valve provides the most effective means to regulate and control flow. Control valves use signals received from instruments positioned throughout the piping system to automatically make adjustments that regulate the commodity within the pipe. Though control valves can perform many functions, they are typically used to control the flow of a commodity within a pipe or to limit its pressure. Figure 5-20 shows the drawing symbols for a control valve.

Control valves must be arranged within a run of pipe so that they can be easily operated. To achieve this, *control valve manifolds* are configured. Control valve manifolds make control valves readily accessible to plant workers. Control valve manifolds are discussed in greater detail in Chapter 12: Piping Systems. Figure 5-21 shows a typical control valve manifold.

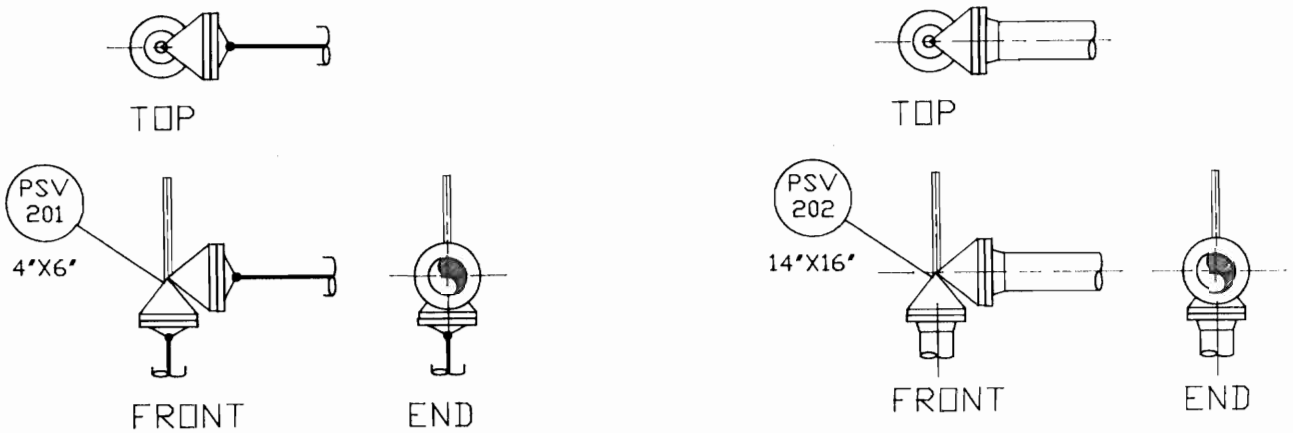

Figure 5-19. Relief valve and pressure safety valve drawing symbols.

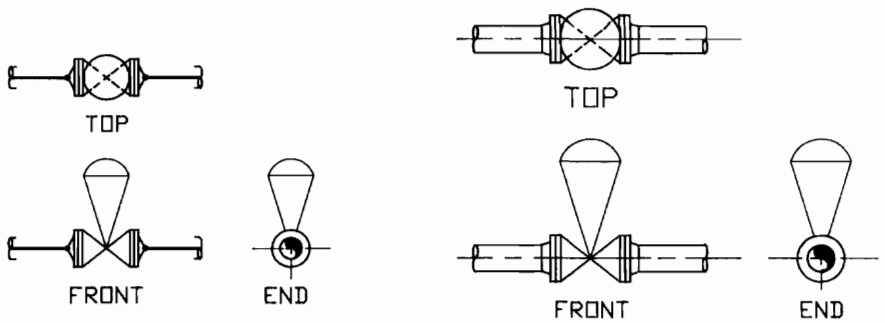

Figure 5-20. Control valve.

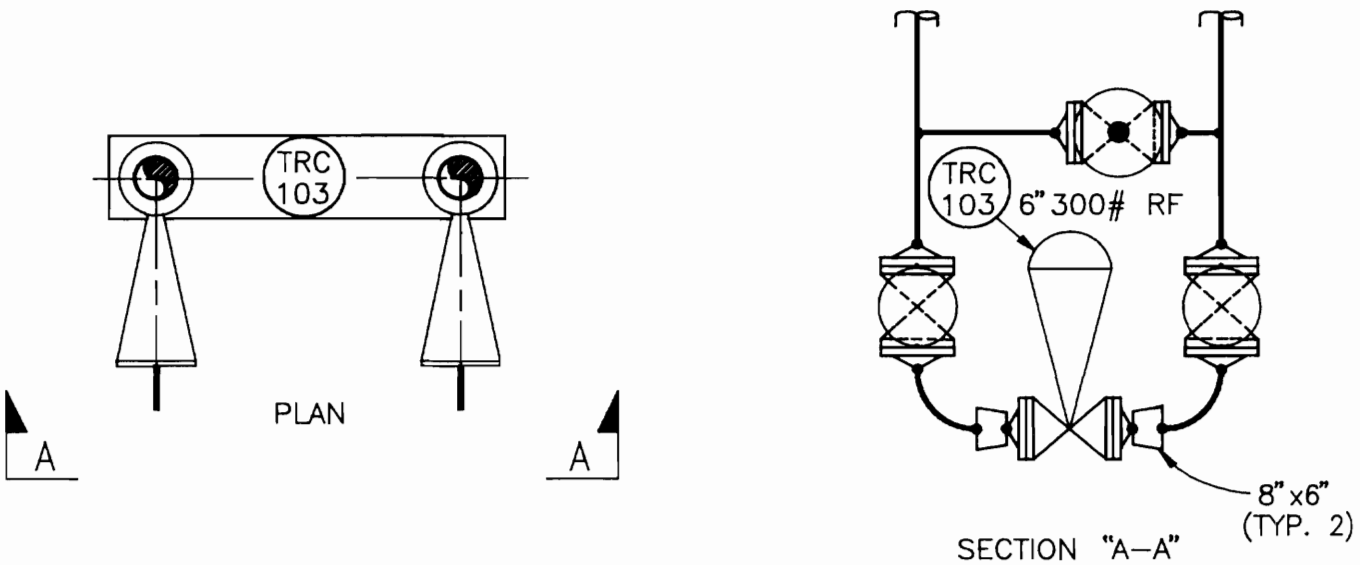

Figure 5-21. Control valve manifold.

VALVE OPERATORS

A *valve operator* is a mechanism that causes a valve to perform its function. Operators can be *manual* or *automatic*. Manual operators employ levers, gears, or wheels to facilitate movement within a valve. In situations where the standard handwheel is insufficient to operate the valve, gears are commonly used to enhance a handwheel's effectiveness. Bevel, spur, and worm gears supply the handwheel with a greater mechanical advantage to open, close, or throttle the commodity within the pipe.

If a valve is installed at a height that is out of a worker's reach, a *chain operator* is often used. The chain operator is a sprocket-like attachment bolted to a valve's handwheel. A looped chain is passed through the sprocket and is hung down to a height that is accessible by a worker. This allows a worker to operate the valve without the aid of a ladder or moveable scaffold. Figure 5-22 shows a typical chain operator.

Actuators

Automatic operators known as *actuators* use an external power supply to provide the necessary force required to operate valves. Automatic actuators use hydraulic, pneumatic, or electrical power as their source for operating valves. Hydraulic and pneumatic actuators use fluid or air pressure, respectively, to operate valves needing linear or quarter-turn movements. Electric actuators have motor drives that operate valves requiring multiple turn movements.

Automatic actuators are often provided on control valves that require frequent throttling or those found in remote and inaccessible locations within a piping facility. Another common application for automatic actuators is on control valves of large diameter pipe. These valves are often so large that a worker simply cannot provide the torque required to operate the valve. Also, in an effort to protect workers, control valves located in extremely toxic or hostile environments are outfitted with automatic actuators. Additionally, in emergency situations, valves that must be immediately shut down are operated automatically.

Figure 5-22. Chain operator. Courtesy of Duraval.

CHAPTER 5 REVIEW QUIZ

1. What is a valve?

2. Name four end preparations for manufactured valves.

3. What is the primary application for gate valves?

4. What phrase describes a valve's length measurement?

5. What can be used to approximate the distance a stem will rise above a handwheel?

6. Globe valves are used for what service situation?

7. When using angle valves, which direction must flow be traveling when it enters the valve?

8. What is the purpose of a check valve?

9. Which valve prevents excessive pressure on gas and vapor service line?

10. What type of device is used to operate valves installed in remote locations of a piping facility?

EXERCISE INFORMATION

The fittings depicted in Figure 5-23a and b will be used to complete the exercises in Chapters 5 and 10. To complete the exercises draw the symbols below using the following guidelines.

- Start from scratch and draw all symbols full scale.
- Draw symbols with 0.00″ line width (NOT A PLINE).
- Block each symbol individually using the block name indicated. (DO NOT include text with the blocked symbol.)
- Place a base point on one end of each fitting using *MIDpoint, ENDpoint*, or *CENter* **OSNAP** options.
- In the "*Block Definition*" dialog box check the *Create icon from block geometry* radio button.
- **SAVE** the file as "*VALVES.dwg*."

After the symbols have been created and the drawing saved, start the exercise drawing and use *AutoCAD Design Center* to open the file *VALVES.dwg*. Insert the required symbols into the appropriate locations.

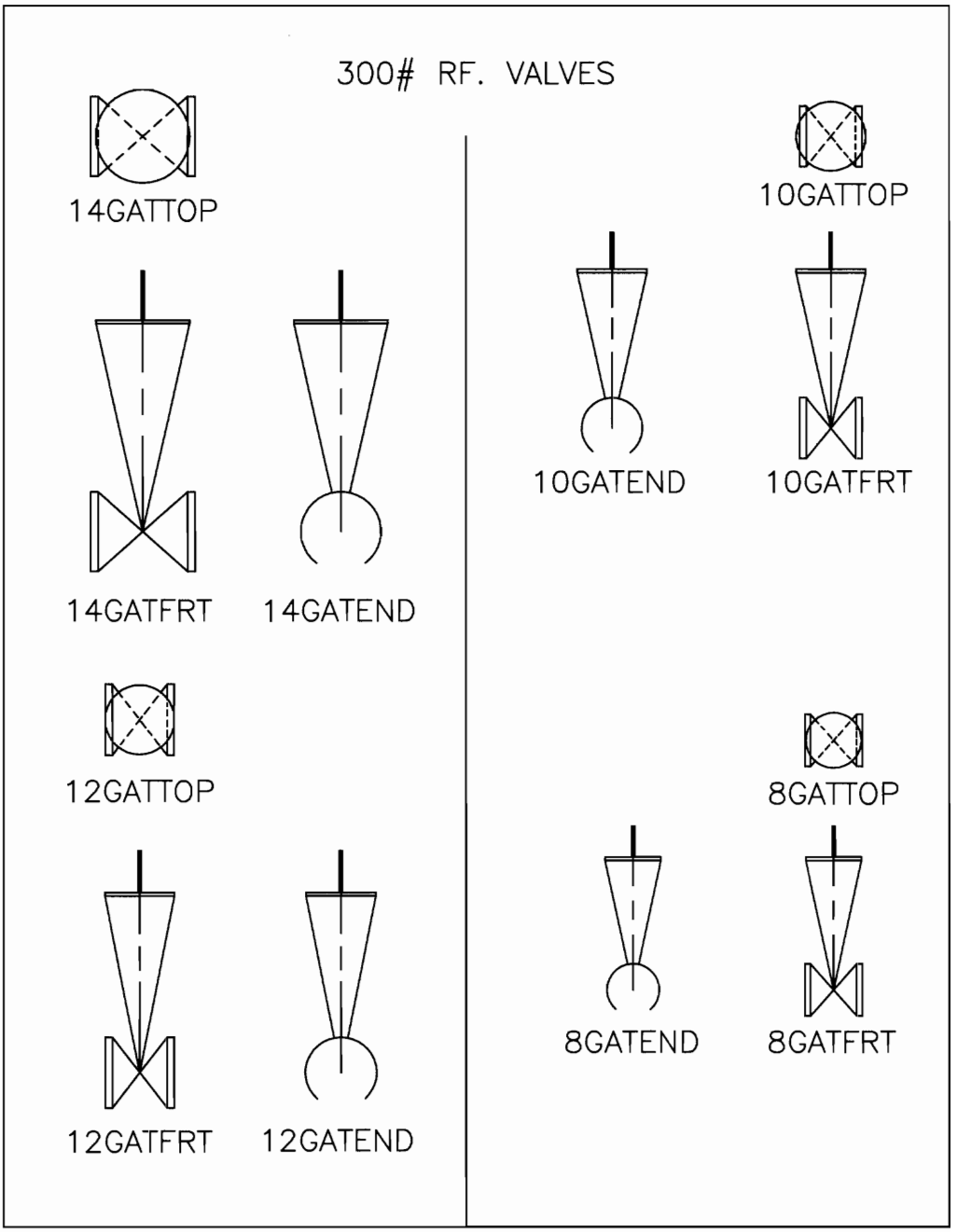

Figure 5-23a. AutoCAD drawing symbols and file names *(continued on next page)*.

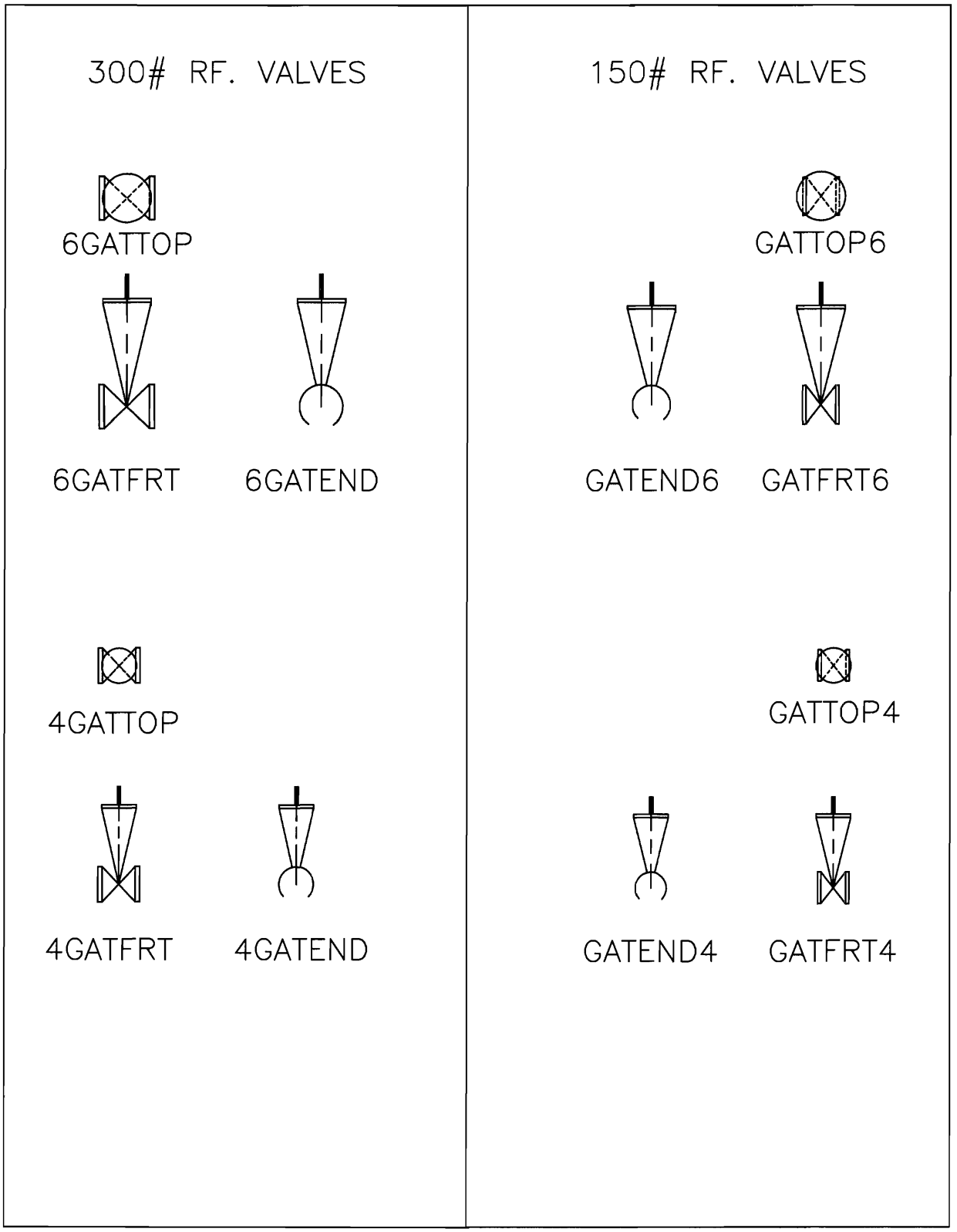

Figure 5-23b. (*Continued*).

Drawing Valves

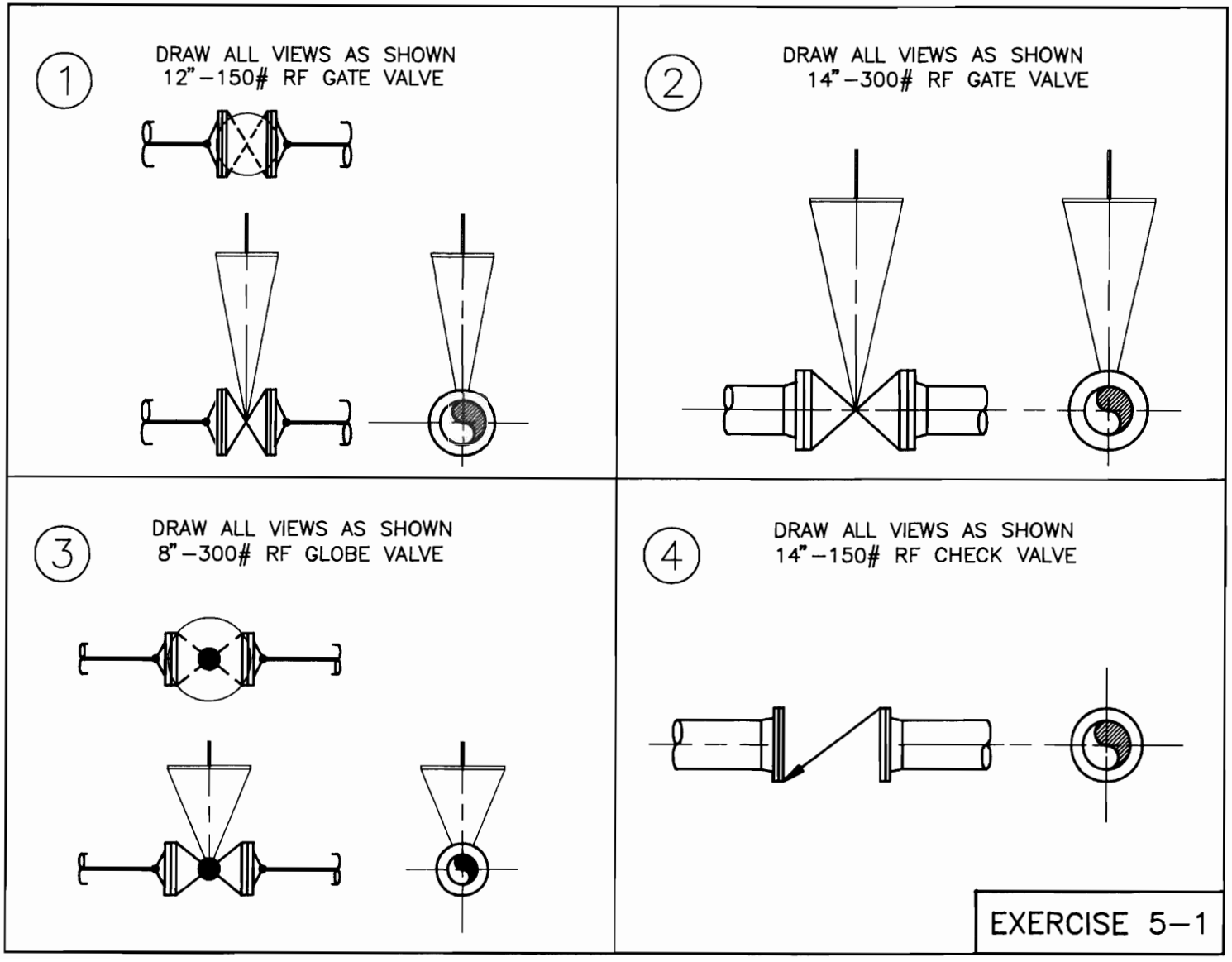

1

Solve for the missing dimesions.

14" 300# GATE VALVE RF
1/8" GASKETS

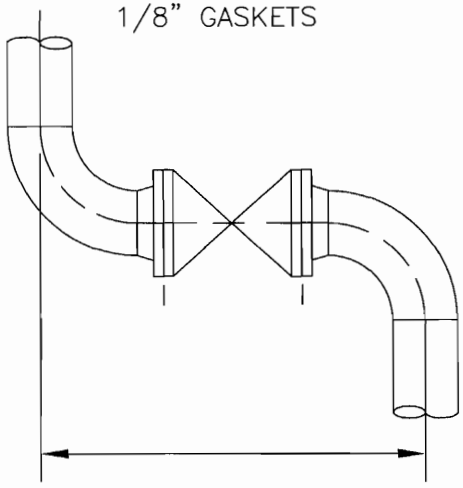

2

Solve for the missing dimesions.

14" 150# GATE VALVE RF
14" 150# CHECK VALVE RF
1/8" GASKETS

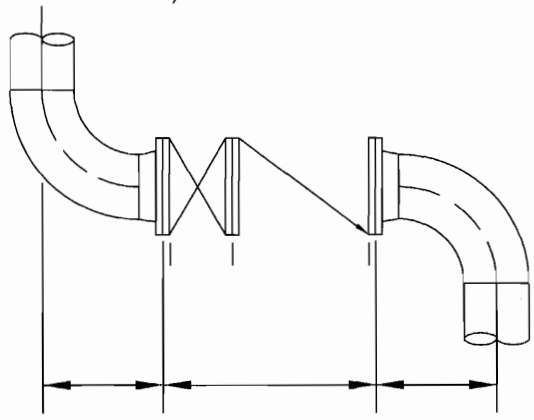

3

Solve for the missing dimensions.

6" 150# GATE VALVE RF
4" 300# CONTROL VALVE RF
1/8" GASKETS

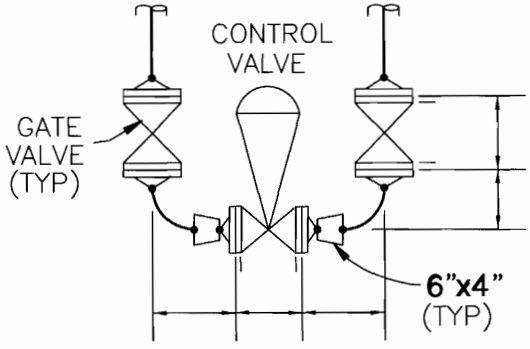

4

Solve for the missing dimensions.

8" 300# GLOBE VALVE RF
1/8" GASKETS

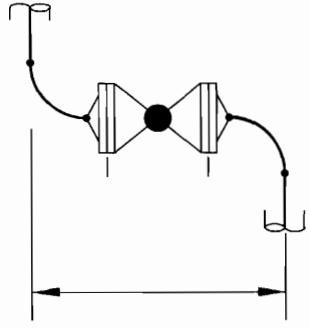

EXERCISE 5-2

1

Solve for the missing dimensions.

8" 150# GATE VALVE RF
6" 150# GLOBE VALVE RF
6" 300# CONTROL VALVE RF
1/8" GASKETS

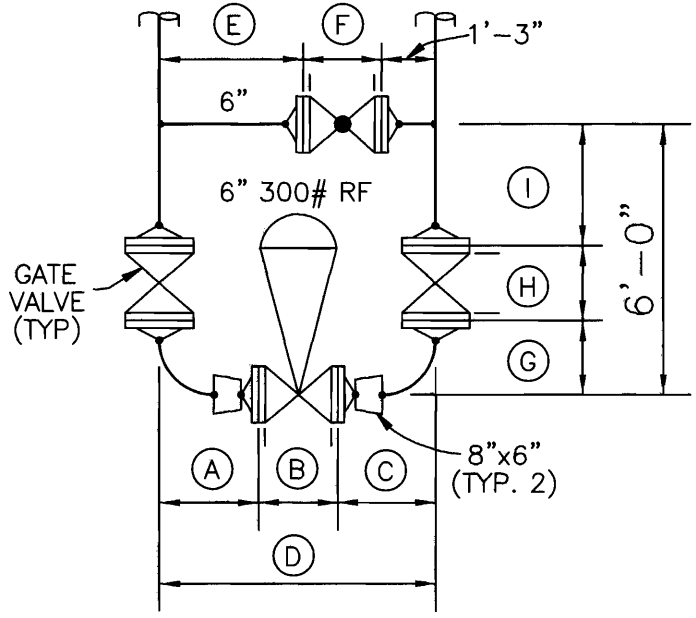

A= _____ F= _____

B= _____ G= _____

C= _____ H= _____

D= _____ I= _____

E= _____ I=(6'-0")-(G+H)

E=(D)-(F+1'-3")

2

Solve for the missing dimensions.

10" 150# GATE VALVE RF
8" 150# GLOBE VALVE RF
8" 300# CONTROL VALVE RF
1/8" GASKETS

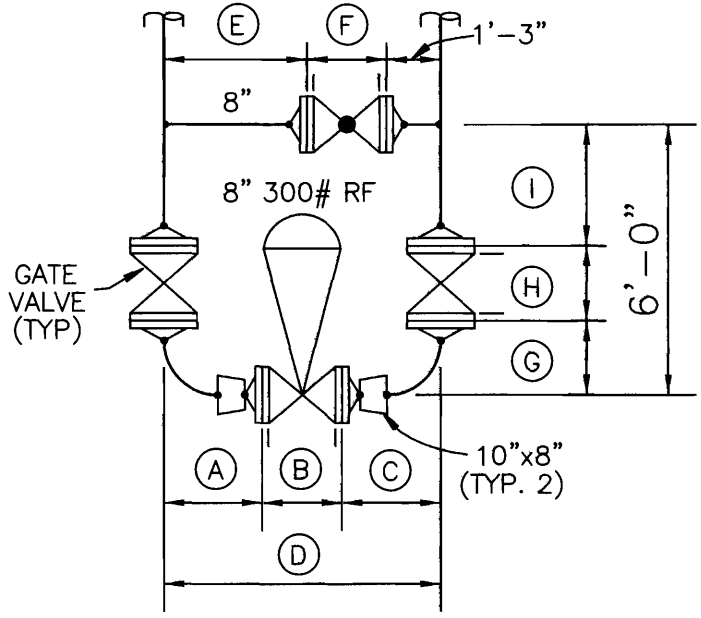

A= _____ F= _____

B= _____ G= _____

C= _____ H= _____

D= _____ I= _____

E= _____ I=(6'-0")-(G+H)

E=(D)-(F+1'-3")

EXERCISE 5-3

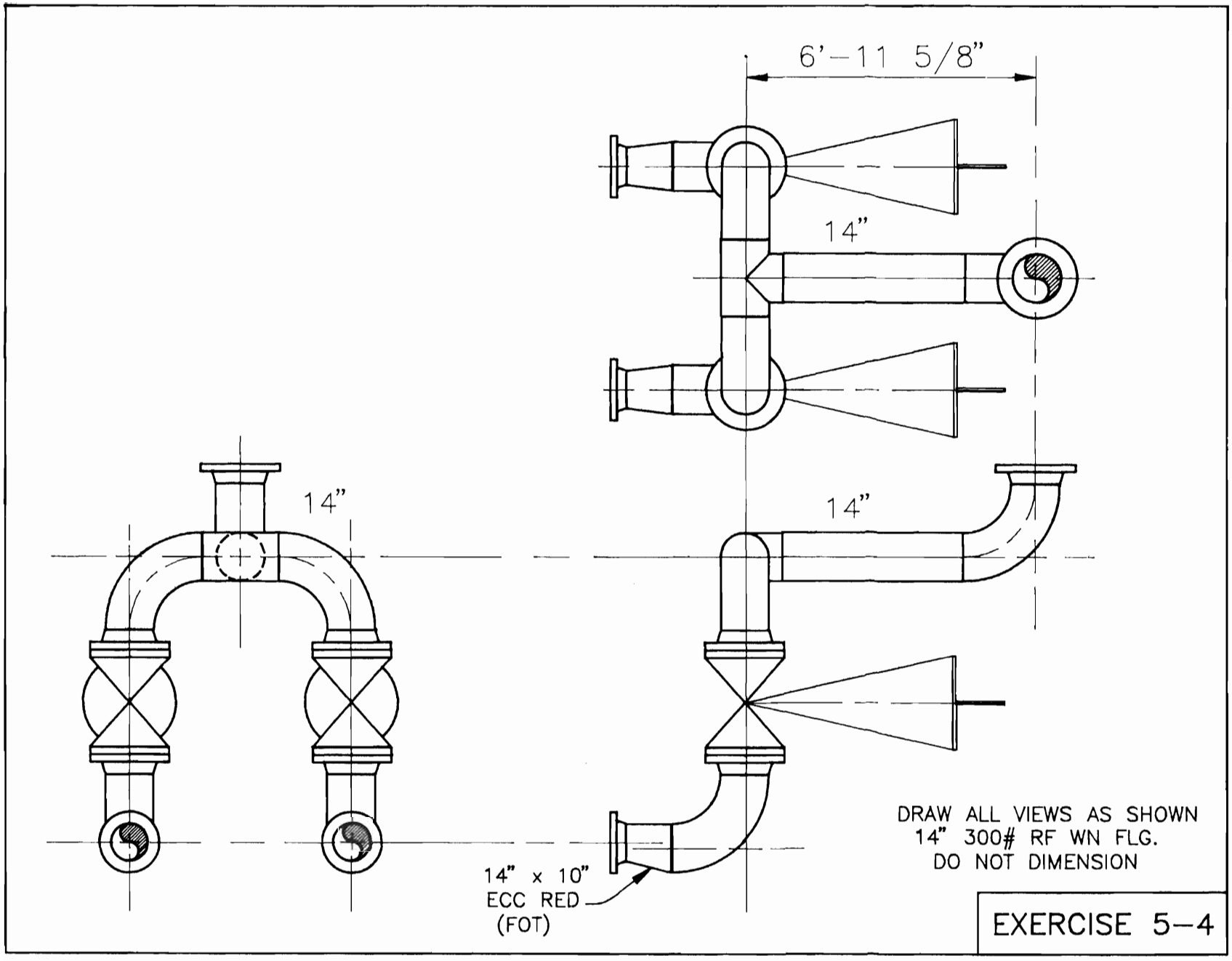
6'-11 5/8"
14"
14"
14"
14" x 10"
ECC RED
(FOT)
DRAW ALL VIEWS AS SHOWN
14" 300# RF WN FLG.
DO NOT DIMENSION
EXERCISE 5-4

Mechanical Equipment

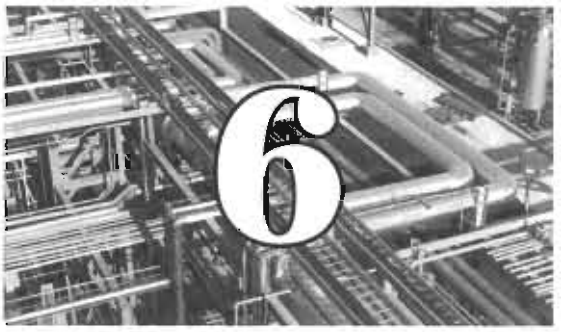

TYPES OF EQUIPMENT

Although components such as pipe, fittings, flanges, and valves, which are used to transport various commodities from one location in a piping facility to another, are important and impossible to do without, they play a minor role in the actual manufacturing of a salable product. Other components of a piping facility actually perform the tasks for which the facility is being built. These items are known collectively as *mechanical equipment*.

Mechanical equipment is used to start, stop, heat, cool, liquefy, vaporize, transfer, store, mix, or separate the commodity flowing through the piping system. The discussion in this chapter will concentrate on the pieces of equipment that are used in a majority of all piping facilities.

Vessels

Horizontal Vessels/Accumulators

The horizontal vessel, similar to the one shown in Figure 6-1, is a cylindrical-shaped storage tank whose long axis is parallel to the horizon. It is used primarily as a receiving and collecting container for liquids and, therefore, has no internal moving parts. Support saddles are welded on the underside of the vessel to prevent it from rolling off its concrete foundations. A nozzle on the top of the vessel allows liquids to enter and fill the vessel. A nozzle on the bottom allows the liquids to be drawn out. Smaller nozzles can be used for venting and instrumentation attachment. Instruments are needed to measure the level of the commodity within the vessel. A large diameter nozzle, typically 18″ ID, called a *manway*, provides an entrance for a worker into the vessel for internal inspection and maintenance. Figure 6-2 shows the plan and elevation views of a horizontal vessel.

Figure 6-1. Horizontal vessel. Courtesy of Nisseki Chemical Texas, Inc., Bayport, Texas.

Vertical Vessels/Fractionation Columns

The vertical vessel is a cylindrical vessel whose long axis is perpendicular to the horizon (see Figure 6-3). Easily the most visible piece of equipment, some vertical vessels can exceed 200 feet in height. Fractionation columns have internal plates called *trays* that aid in the separation and collection of the various molecular compounds of a feed stock. The process of breaking down a feed stock into its molecular compounds is called *fractional distillation*. After further refinement and processing, these compounds will become by-products such as diesel, gasoline, kerosene, and many others. A detailed explanation of the fractional distillation process will be presented after the remaining pieces of equipment have been discussed. See Figure 6-4 for the plan and elevation views of a vertical vessel.

Ladders, Cages, and Platforms

Many vessels and other pieces of equipment are built to such great heights they become accessible only by ladders. *Ladders* allow workers to access the higher elevations of equipment for routine inspection and maintenance. Ladders are made of steel bar and plate, and are welded or bolted to the exterior of a vessel.

Cages are designed to enclose a ladder and prevent a worker from falling away should he lose his grip on the

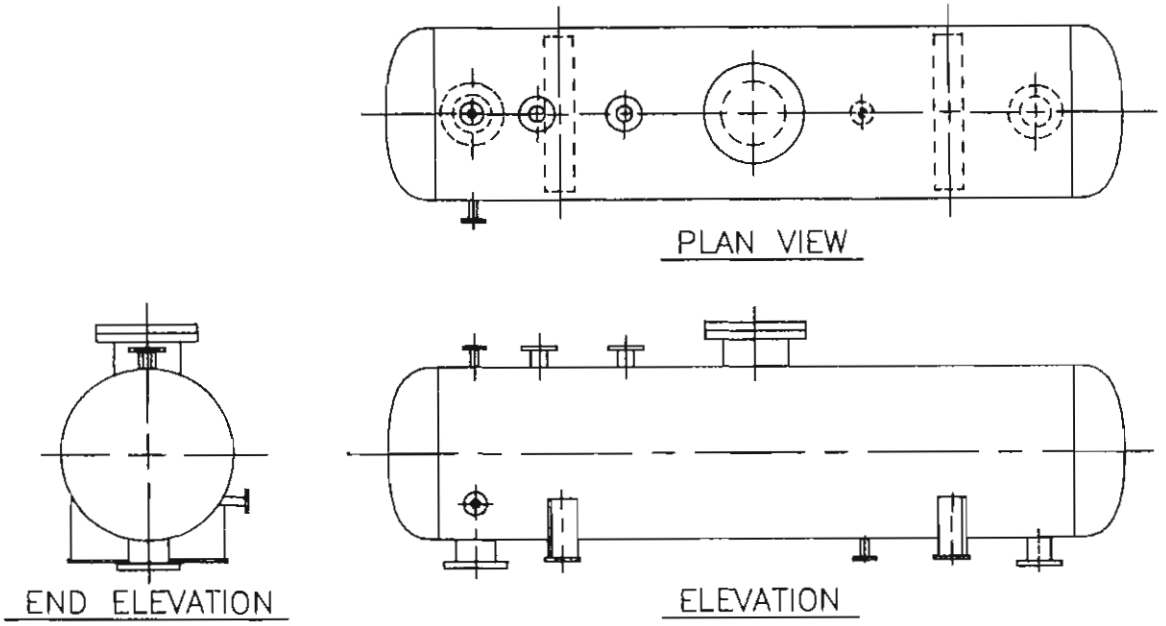

Figure 6-2. Plan and elevation views of a horizontal vessel.

Figure 6-3. Vertical vessel. Courtesy of Nisseki Chemical Texas, Inc., Bayport, Texas.

rungs. Made of steel plate, cages provide the worker with a sense of security when scaling tall vertical structures.

Platforms are like small elevated walkways around the outside of a vessel or between equipment and structures. Usually 3′-0″ wide, they have a floor made of steel grating or plate. With 3′ tall handrails, workers can safely operate, inspect, and maintain a vessel. Platforms are spaced so ladders will not have a vertical run of more than 30′-0″, but are not spaced closer than 8′-0″ to provide adequate headroom clearance. A typical vertical ladder and cage are shown in Figure 6-5. Platform walkways are also depicted spanning between storage tanks in Figure 6-5.

Pumps

Pumps, similar to the one shown in Figure 6-6, are mechanical devices used to move fluids under pressure from one location to another. Pumps accelerate the speed at which a commodity travels within a pipe, thereby increasing its rate of flow. Pumps used in piping facilities will be one of the following classifications: centrifugal, reciprocating, or rotary.

Centrifugal pumps

The centrifugal force created by the high speed impellers of a centrifugal pump creates a smooth nonpulsating rate of flow. With a fast spinning impeller creating a low

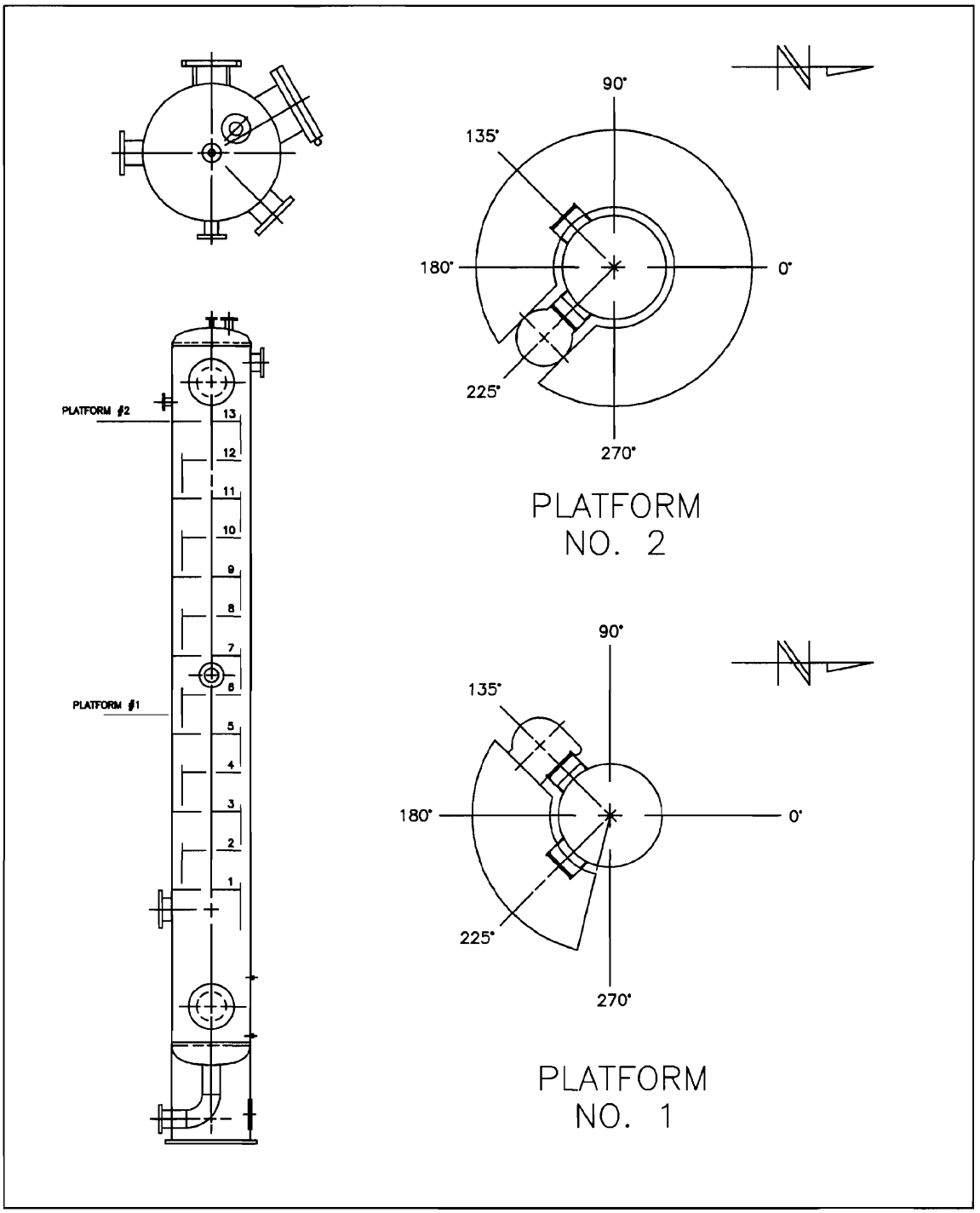

Figure 6-4. Vertical vessel.

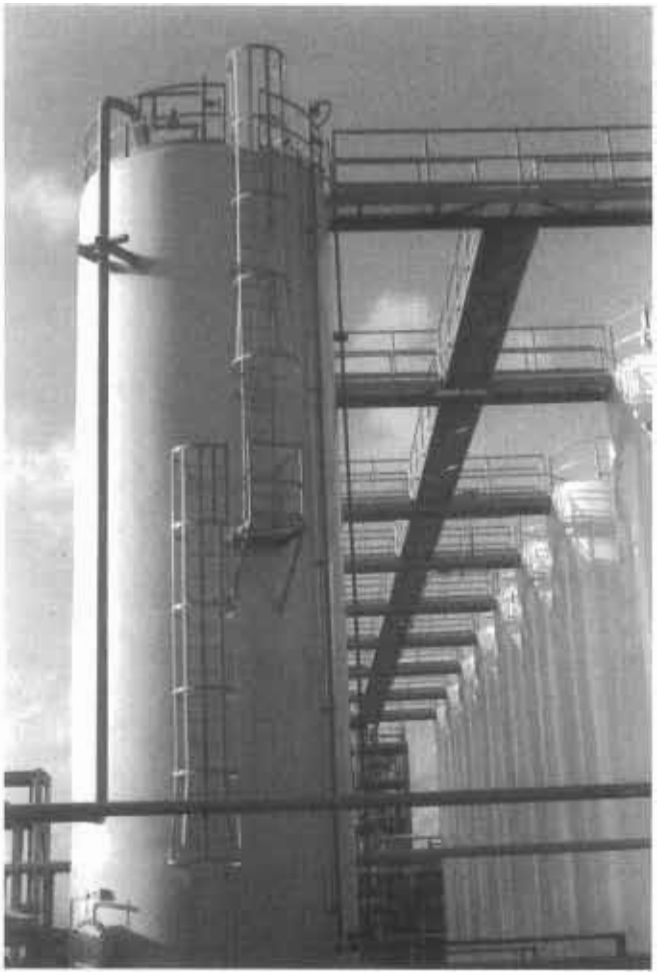

Figure 6-5. Ladder, cage, and platforms. Courtesy of Nisseki Chemical Texas, Inc., Bayport, Texas.

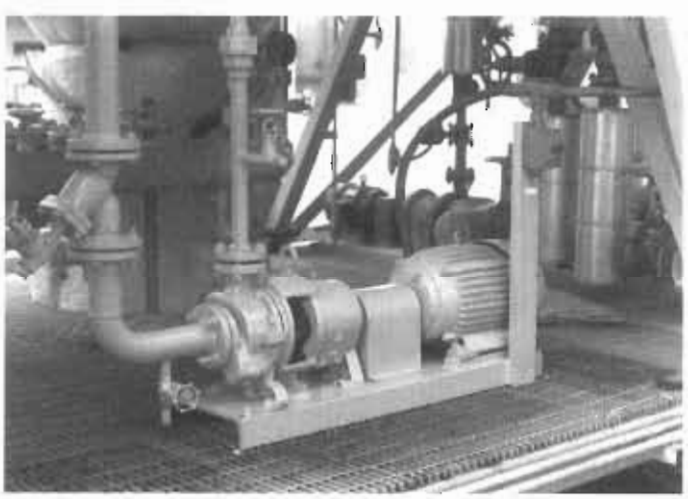

Figure 6-6. Pump. Courtesy of Nisseki Chemical Texas, Inc., Bayport, Texas.

pressure center point, any commodity entering the pump will naturally seek the center of the impeller only to be spun out at a high rate of speed. The efficient operation of the centrifugal pump makes it the standard of most piping facilities.

Reciprocating pumps

The reciprocating pump uses internal parts, similar to a piston or plunger, that alternately move back and forth to create pressure. With each stroke of the piston, pressure is increased forcing the commodity out of the pump. The reciprocating pump is installed in piping systems where extremely high pressures are required.

Rotary pump

The rotary pump is similar to the reciprocating pump in that it is a positive displacement type. Rotary pumps use mechanical devices such as pistons, gears, or screws to discharge a commodity at a smooth, continuous rate of flow. It performs without creating the extreme pressure surges often associated with the reciprocating pump.

Figure 6-7 depicts the plan and elevation views of a typical pump. Notice the nozzles are represented in detail. A pipe drafter's chief concern is the location, size, and rating of these nozzles. The type of pump is secondary.

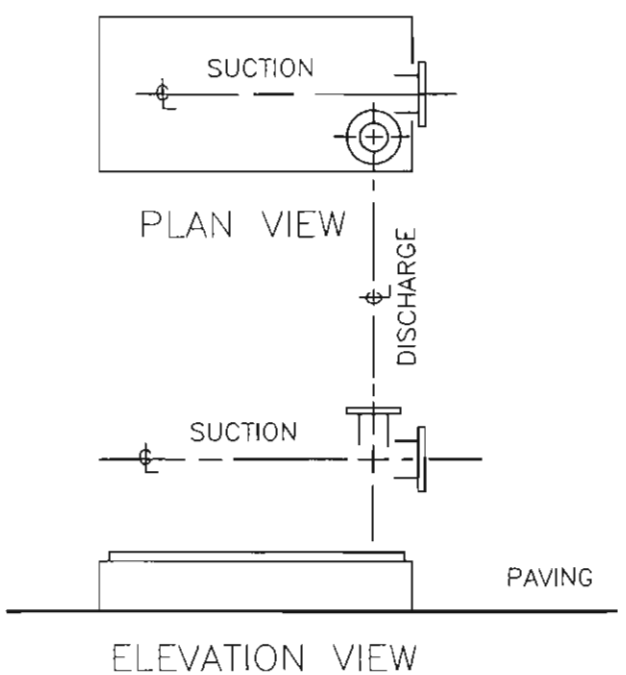

Figure 6-7. Pump plan and elevation views.

Nozzle arrangements

To effectively locate a pump within a piping facility, one must consider the suction and discharge nozzles. The suction nozzle is where the commodity enters the pump. The discharge nozzle is where the commodity exits the pump. The positioning of the nozzles on the pump is called *pump nozzle arrangement*. Depending upon the type, pumps typically are available in five different nozzle arrangements. The chart in Table 6-1 shows the arrangements of pump nozzles.

To achieve maximum efficiency, most pumps are installed with the shortest possible suction line.

Table 6-1
Pump Nozzle Arrangements

	SUCTION	DISCHARGE	POSITION
1	SIDE	SIDE	
2	TOP	TOP	
3	SIDE	TOP	
4	END	TOP	
5	END	END (IN-LINE)	

Pump Drivers

All pumps require a starting device to function. These devices are known as *drivers*. The driver is connected to the pump via a rotating shaft. The shaft turns the impellers, gears, screws, or pistons to initiate the pumping action. An electric motor is the most commonly used driver. As an alternative to electricity and as a back-up to the electric motor, a steam turbine is often employed. The steam turbine can operate during power outages or when a motor is being repaired or replaced. Steam turbines are also chosen over electric motors for use in areas where explosive gases may be present. The electric current required to power the motor is a possible source to ignite flammable gases. The turbine, driven by steam, obviously reduces the possibility of an explosion. Figure 6-8 shows an electric motor driver.

A diesel engine is used during times of emergency. When piping systems are shut down, diesel engines provide power to operate firewater systems and other essential services. Limited to outdoor service only, diesel engines can be used when conditions render electric motors and steam turbines useless. Figure 6-9 shows a typical diesel engine driver.

Compressors

The compressor is similar to the pump, but it is designed to move air, gases, or vapors rather than liquids. The compressor is used to increase the rate at which a

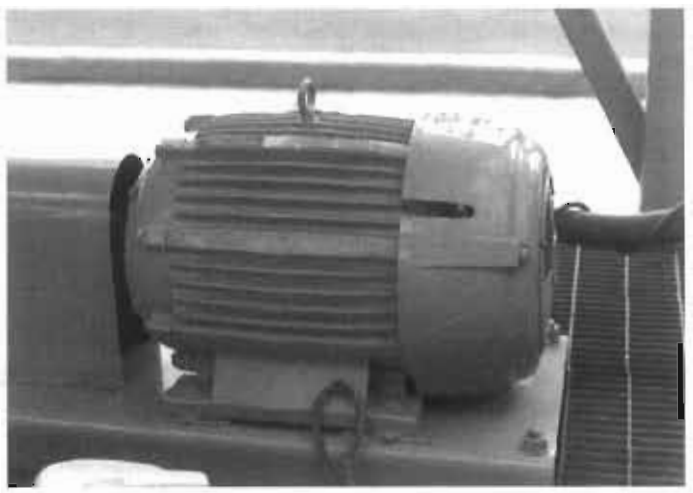

Figure 6-8. Electric motor. Courtesy of Nisseki Chemical Texas, Inc., Bayport, Texas.

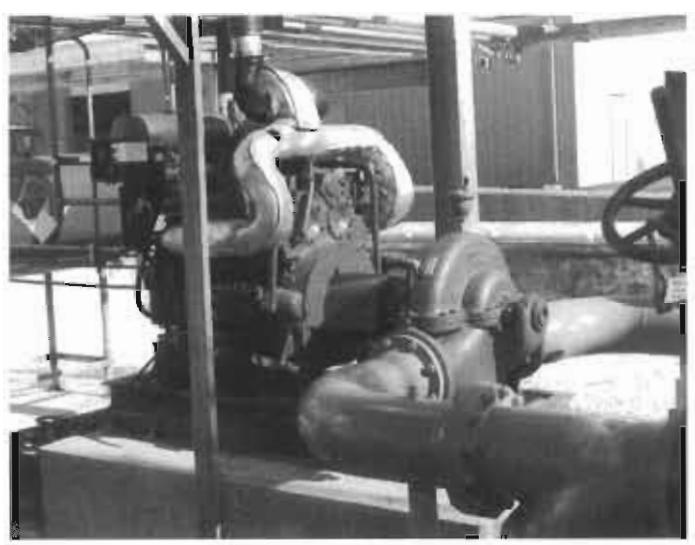

Figure 6-9. Diesel engine. Courtesy of Nisseki Chemical Texas, Inc., Bayport, Texas.

gaseous commodity flows from one location to another. Gases, unlike liquids, are elastic and must be compressed in order to control their flow characteristics. Like pumps, compressors are manufactured in centrifugal, reciprocating, and rotary configurations.

Exchangers

Another common piece of mechanical equipment is the exchanger. Its purpose in a piping facility is to transfer heat from one commodity to another. Whether the objective is to heat a liquid to a desired temperature or cool a product for final storage, the exchanger can accomplish both. Exchangers do not mix commodities together, but rather transfer heat through contact with a surface of a different temperature. An exchanger most people are familiar with is the common household water heater. Cold water flows around a heated element to warm the water. A number of exchanger types are available; they include the shell and tube, double pipe, reboiler, and air fan.

Shell and tube exchanger

The shell and tube exchanger performs its task by circulating a hot liquid around tubes which contain a cooler liquid. The hot liquid circulates in an enclosed area called the shell. Tubes containing the cooler liquid are looped through the shell. Hot liquid in the shell warms the cooler liquid in the tubes, while the cooler liquid in the tubes cools the warm liquid in the shell. Figure 6-10 provides a

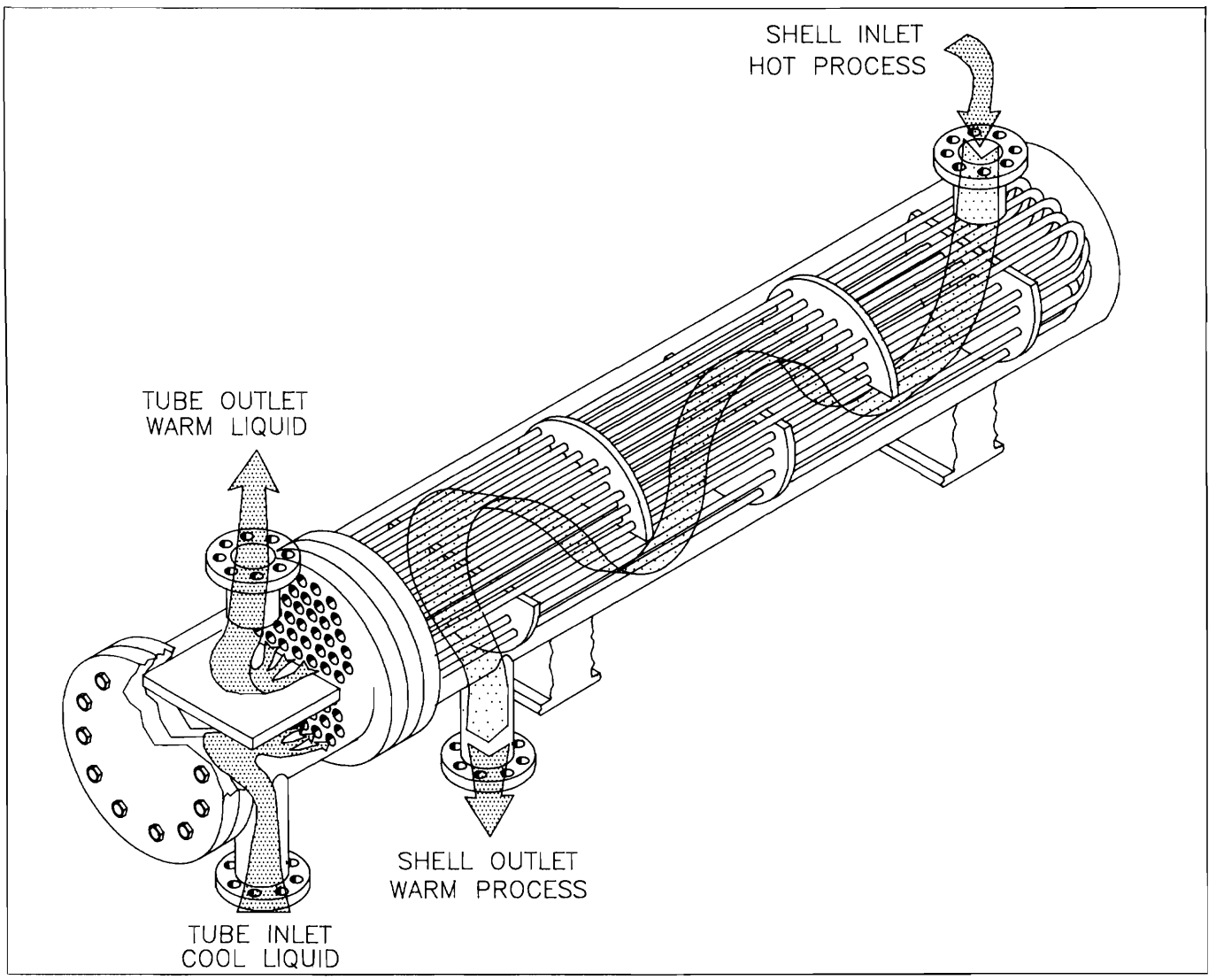

Figure 6-10. Internal view of a shell and tube exchanger.

look into the shell and tube exchanger. Contact between the cool and hot liquids will naturally exchange heat from the hotter to the colder. Figure 6-11 shows the plan and elevation views of a shell and tube exchanger.

Double pipe exchanger

Also known as the *G-Fin* or *hairpin* exchanger, double pipe exchangers are manufactured with a single, small diameter pipe inserted into a larger diameter pipe. The two pipes contain commodities of different temperatures similar to the shell and tube exchanger. Figure 6-12 includes two double pipe exchangers stacked atop one another. The upper is shown without protective insulation, the lower one with insulation.

To prevent the two pipes of the exchanger from coming in contact with one another, thin metal plates called *fins* are welded to the outside of the smaller pipe. Figure 6-13 shows an end view of the double pipe exchanger. These fins also aid in the transfer of heat from one commodity to the other. Figure 6-14 provides the plan and elevation views of the double pipe exchanger.

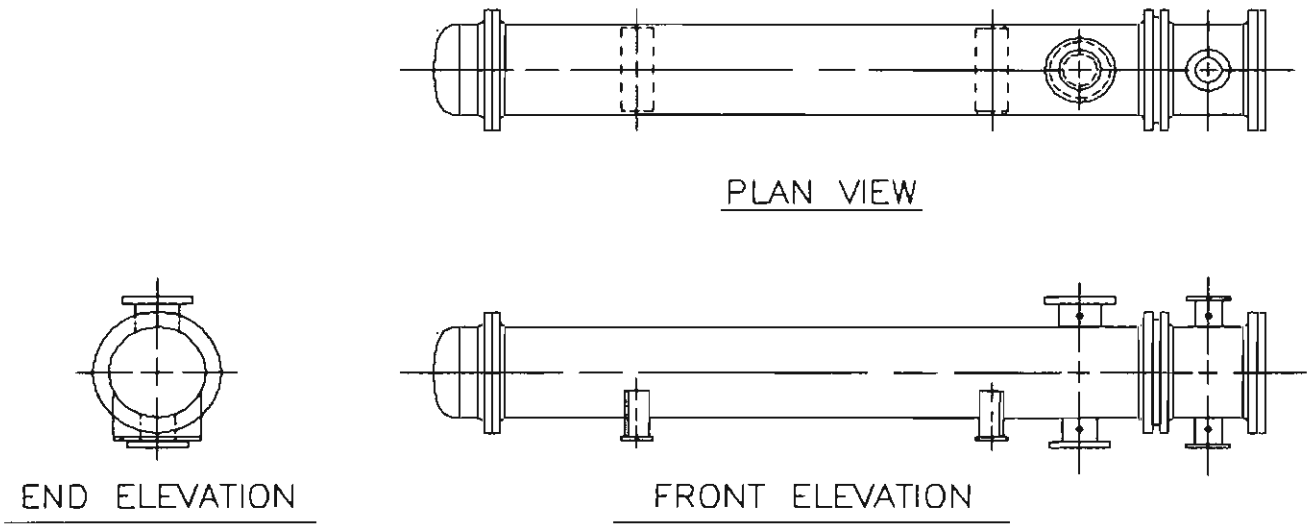

Figure 6-11. Shell and tube exchanger plan and elevation views.

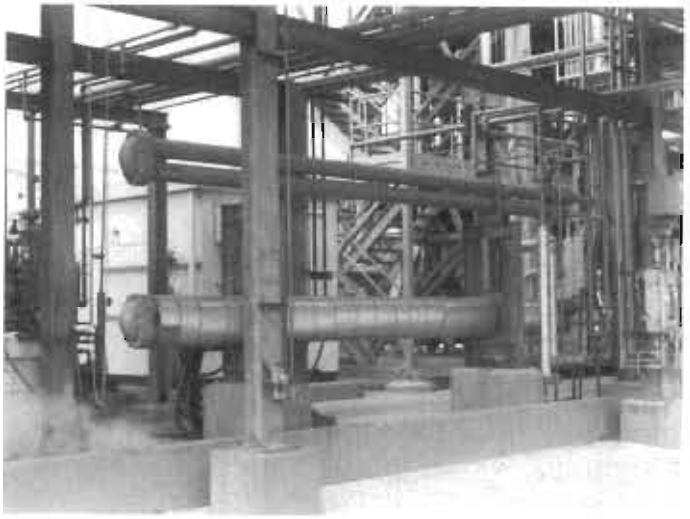

Figure 6-12. Double pipe exchanger. Courtesy of Nisseki Chemical Texas, Inc., Bayport, Texas.

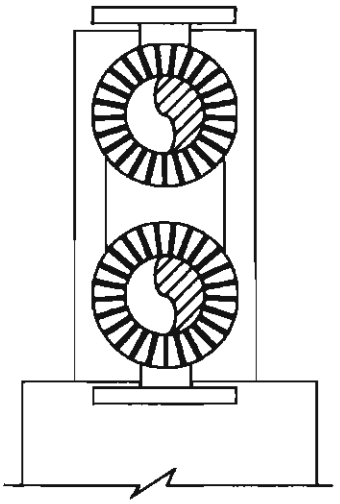

Figure 6-13. End view of a double pipe exchanger.

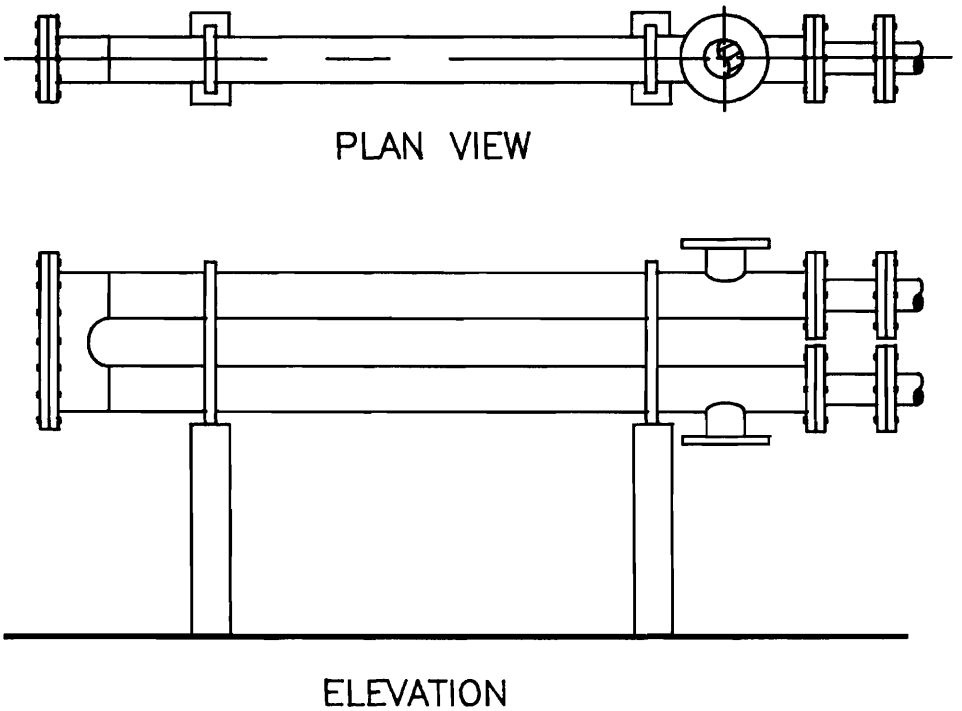

Figure 6-14. Double pipe exchanger.

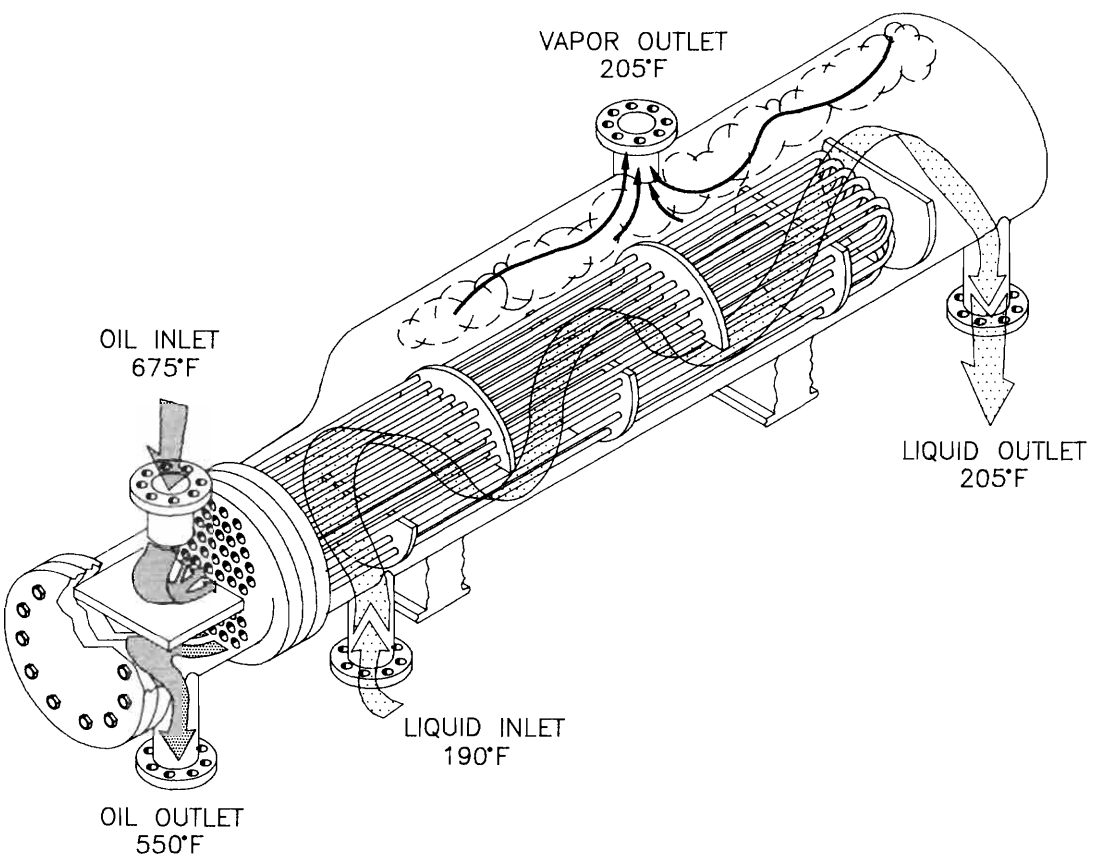

Figure 6-15. Internal views of a kettle-type reboiler.

Reboiler

The reboiler, as the name implies, is used to replenish the temperature of a commodity. Two types of reboilers are used; the kettle-type and thermosyphon. A kettle-type reboiler is similar in design to the shell and tube exchanger. The thermosyphon reboiler is attached directly to the bottom of a fractionating tower. Figure 6-15 represents the internal features of a kettle-type reboiler.

Reboilers are used to keep fluids, which are circulating through a tower, at their boiling point. The process commodity enters the reboiler from the tower in a liquid state, is heated by either super heated steam or another hot liquid, and is returned in a vaporous state to an area in the tower called the *flash zone*. Figure 6-16 depicts the location and use of a reboiler. As we will see later, the flash zone is crucial to the distillation process. Figure 6-17 shows the plan and elevation views of a kettle-type reboiler.

Air fan

Air fans are large fan-type coolers placed above or below a pipe rack that draw air across pipes to cool them. Air fans operate on the same principle as an automobile's radiator, only on a larger scale. Air fans can be as large as 20′-0″ wide and 30′-0″ long. If linked together, air fans can span up to 100 feet or more, running the entire length of a pipe rack.

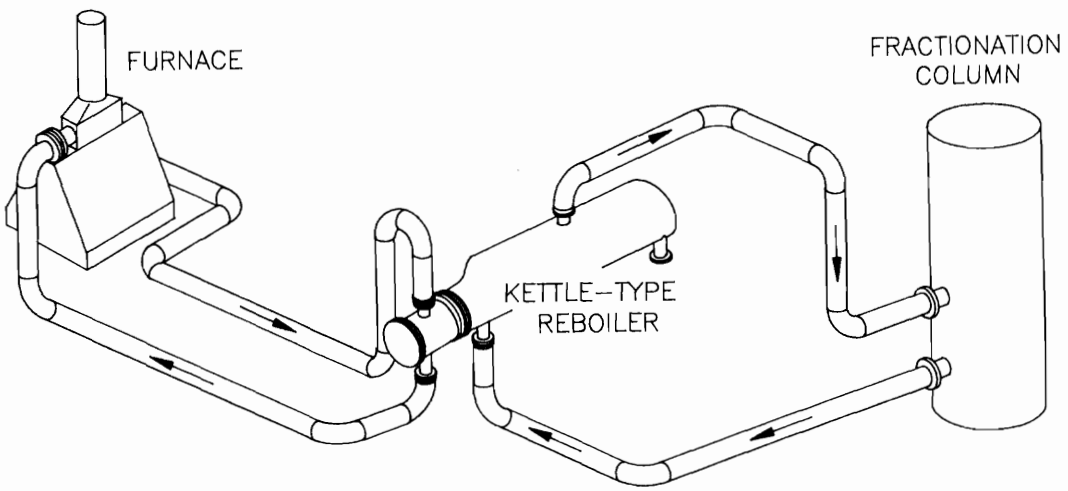

Figure 6-16. Reboiler.

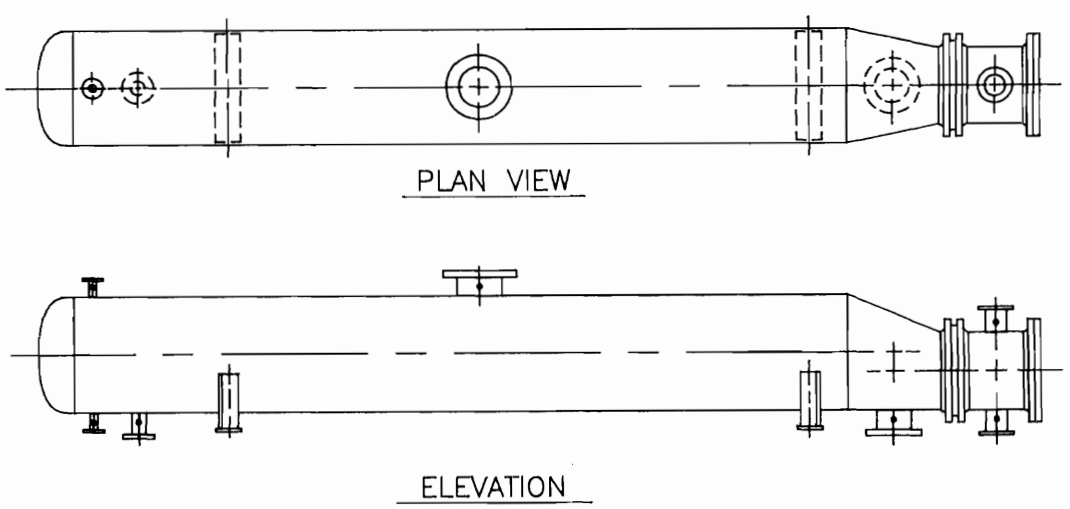

Figure 6-17. Plan and elevation views of a kettle-type reboiler.

Cooling Towers

After circulating through equipment such as exchangers and condensers, cooling water will have accumulated substantial heat gain. Without dissipating the heat gain, cooling water will lose its cooling effectiveness. A cooling tower is a mechanical device that will lower the temperature of cooling water. Cooling towers are uniquely designed to dissipate heat gain by evaporating specific amounts of aerated water that has been circulated through an air-induced tower. Although there is a significant amount of *drift* (the amount of water lost during the aerating and evaporation sequence) cooling towers are extremely efficient and are widely used. Older cooling towers are easily recognizable because they are constructed of wood and have horizontal slats resembling louvers with water cascading down the walls. Figure 6-18 represents a typical cooling tower.

Heaters/Boilers

Heaters, or furnaces as they are also known, are used to raise the temperature of a feed stock to the point where it can be used in a process facility. Some feeds, like crude oil, must be heated to approximately 700°F before it can be piped into a fractionation column. Lining the interior walls of a heater are pipes that travel in a continuous *S* or *U* pattern. Burners, fueled with oil or gas, are used to generate the extreme temperatures required in a heater.

Heaters can be of the vertical or horizontal type. Vertical heaters are often circular in shape and have internal piping traveling in a vertical direction. Horizontal or *box* heaters are rectangular in shape and have pipes routed in the horizontal plane. Both the *S* and *U* pattern heaters have similar characteristics that include brick-lined heating chambers, flaming burners, and baffled venting stacks (see Figure 6-19).

Boilers use the same principle as a heater. They are used primarily to generate super heated steam or stripping steam. Constructed similar to a heater, boilers can raise the temperature of water or condensate to 1,000°F or more.

Storage tanks

From the name, it's not too difficult to guess what this piece of equipment is used for. Storage tanks are used in several phases of the refining process. They can be used to store crude oil prior to its use in the facility, as holding tanks for a partially refined product awaiting further processing, or to collect a finished product prior to its delivery or pick-up by a customer.

Figure 6-18. Cooling tower. Courtesy of Nisseki Chemica Texas, Inc., Bayport, Texas.

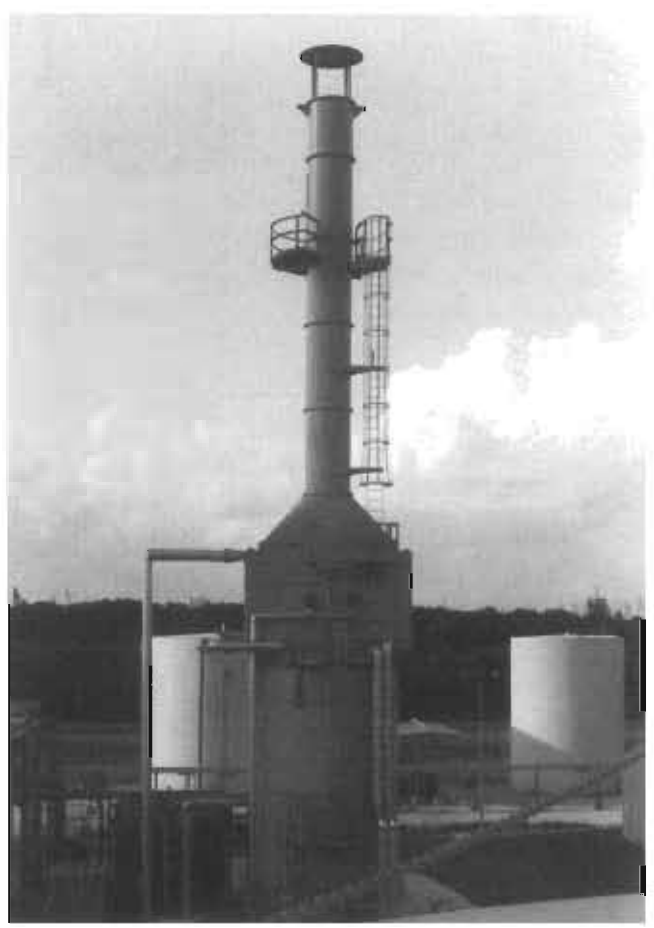

Figure 6-19. Vertical heater. Courtesy of Nisseki Chemical Texas, Inc., Bayport, Texas.

Usually placed within a common area of a facility known as a *tank farm*, storage tanks come in various shapes and sizes. Some are shaped similar to horizontal vessels and some are spherical, like a ball. The majority of storage tanks, however, are huge, ground-supported vessels, as much as 200 feet in diameter and up to 60 feet tall. Spherical tanks are used primarily for storing liquefied petroleum gases like butane, methane, or propane. The larger tanks, used for storing liquid product, will have either a conical, elliptical, open, or a floating roof. Floating roofs raise and lower to automatically adjust to the level of the commodity in the tank. Floating roofs help reduce evaporation and prevent the buildup of dangerous gases that often occur with flammable liquids.

As a preventative measure, *dikes* are erected to contain major leaks or spills. Should a storage tank rupture or suffer severe damage, a dike would prevent major contamination to surrounding areas. Dikes can be earthen dams or concrete walls built around a storage tank at a height that would contain the entire contents of the storage tank should a spill occur. Figure 6-20 depicts typical storage tanks and surrounding concrete dike.

EQUIPMENT IN USE

Now that we have discussed the major pieces of equipment, let's look at how they are integrated and function in a typical piping facility. The description to follow will be an abbreviated sequence of steps necessary to transform raw crude oil into its various by-product components.

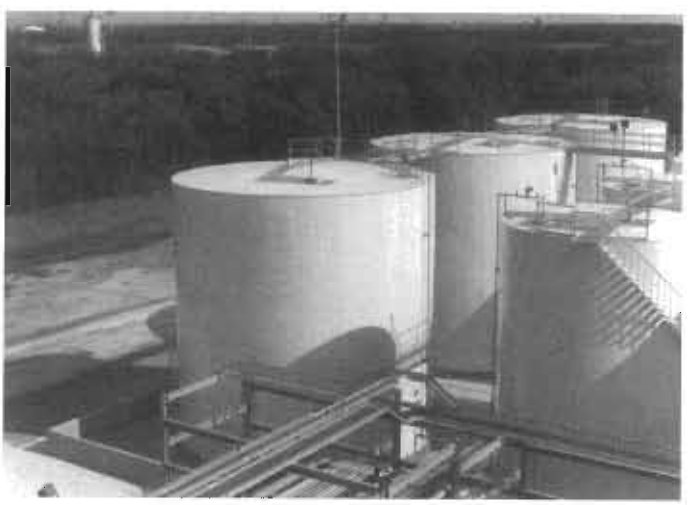

Figure 6-20. Storage tanks. Courtesy of Nisseki Chemical Texas, Inc., Bayport, Texas.

Crude oil is the most common supply product used in petrochemical facilities. Known as *feed*, crude oil is made up of molecules formed by thousands of different hydrogen and carbon atom combinations. Because the molecules are different, each crude oil molecule will boil at a different temperature. But, because they are comparatively similar in molecular structure, groups of molecules often boil within a narrow range of each other. These groups are called *fractions*. The process that will separate these fractions into their various groups so they may be collected for further processing is called *fractional distillation*. Shown in Figure 6-21 is a simplified flow diagram of a crude oil fractionating column. As we look at the fractional distillation process, notice how each piece of equipment plays an important role.

From the storage tank facility, crude oil feed is pumped to a heater. Once inside the heater, the feed is circulated through the pipes and heated to a temperature of approximately 700°F. The boiling feed is then piped to the *flash zone* of the fractionating column. The flash zone is the position in the fractionating column where the incoming feed separates into vapor and liquid states.

Inside the column, the heated crude oil molecules will begin to group together according to their weights. The natural tendency of lighter weight molecules to rise causes the light fractions, those with a low-temperature boiling point, to vaporize and rise to the top of the column. Heavy fractions, the heavier molecules with a high-temperature boiling point, remain in a liquid state and settle to the bottom of the column. The horizontal trays in the column, spaced 18″ to 24″ apart, act as a filter to separate the rising vapors and falling liquids into individual fractions. As vapors rise through the column, they begin to cool and condense. Condensing fractions collect on the trays and are drawn off through a nozzle. The liquid fraction, now a by-product of the feed, is routed to other areas of the facility for additional refinement and processing. If an excess of liquid collects on the tray, it will overflow and fall down to a lower section of the column. There it is once again heated to the point of vaporization. The vapors will begin to rise and start the process over again.

Figure 6-22 shows an enlarged view of a fractionating column and the by-products extracted for its crude oil feed. In the typical fractional distillation process, heavy by-products such as asphalt and tar come off the bottom of the column as residue. As temperatures begin to decrease, heavy oil products, which include fuel and lubricating oils, are extracted. At higher elevations in the column, light oil products such as diesel fuel and kerosene are removed. Above the kerosene, heavy naphtha,

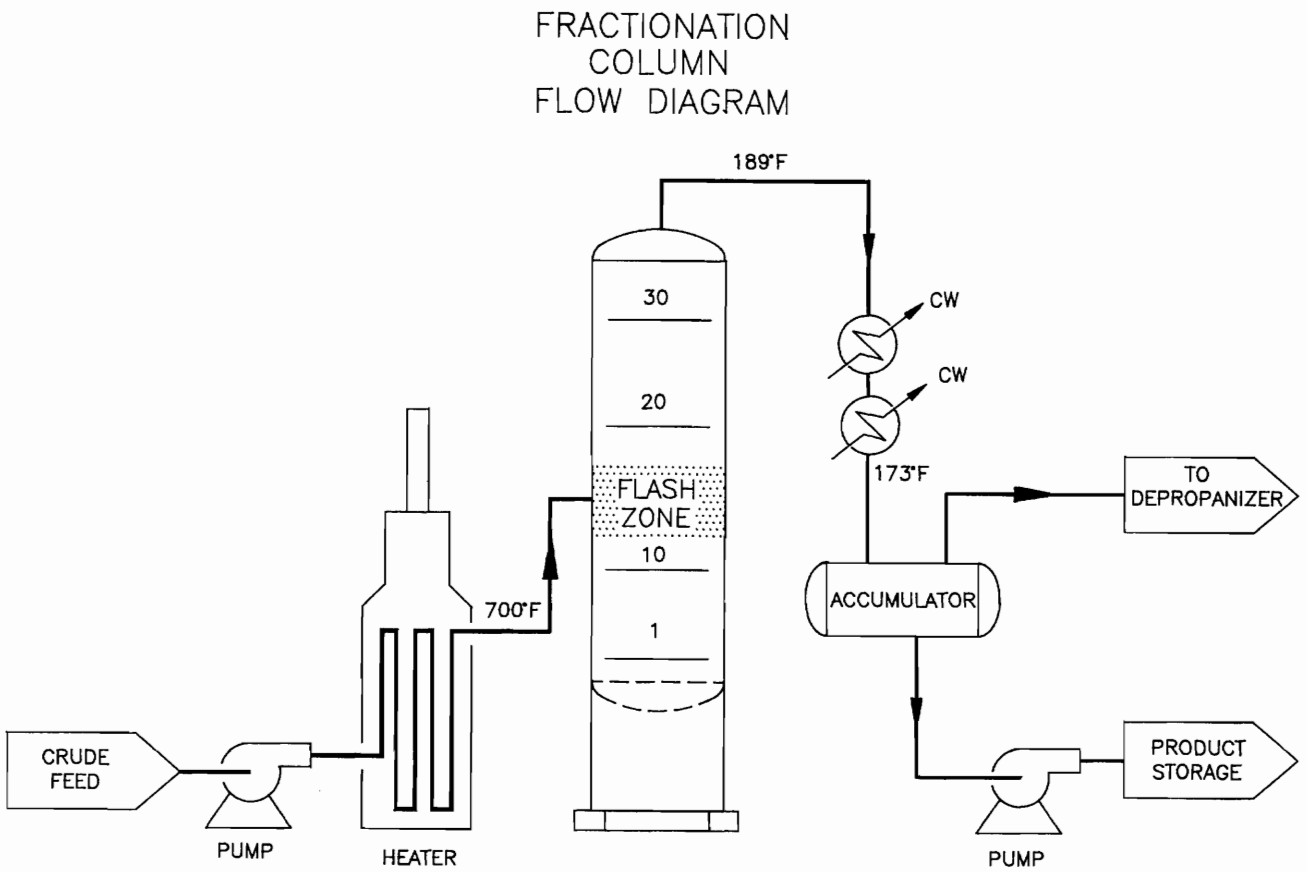

Figure 6-21. Flow diagram for fractional distillation process.

used in making motor gasoline, and light naphtha, used to make aviation gasoline, are collected for further processing. The light naphtha is a prime example of how further processing can yield additional products.

When the light naphtha vapors are removed from the top of the column, they are sent through exchangers to be condensed. As the liquid naphtha is condensed, it is piped to an accumulator for collection. In the accumulator, the liquid naphtha settles to the bottom and is pumped away for additional processing to later become aviation gasoline (av gas). The naphtha vapors left in the accumulator rise to the top and are removed by a compressor to be further processed into liquefied petroleum gases (LPG) such as butane, methane, and propane.

EQUIPMENT TERMINOLOGY

The following list identifies items generally associated with mechanical equipment and vessels:

- *Base plate.* A flat, metal ring welded to the bottom of a vessel's supporting skirt that rests on a concrete foundation. Holes around the perimeter of the metal ring make it possible to position it over anchor bolts and secure it to the foundation.
- *Skirt.* A cylinder shaped support for a vertical vessel. One end is welded to the base plate allowing it to rest on the foundation and the other end is welded to the bottom head of a vertical vessel.
- *Head.* The end enclosures of a vessel. They can be either semi-elliptical, spherical, or dished.
- *Shell.* The cylindrical walls of a vessel.
- *Skirt access opening.* An 18″ ID hole 2′-6″ above the foundation that allows workers entrance for inspection and maintenance.
- *Skirt vents.* Equally spaced holes approximately 3″ to 4″ in diameter bored near the top of the vessel skirt that allow toxic and explosive gases to escape.

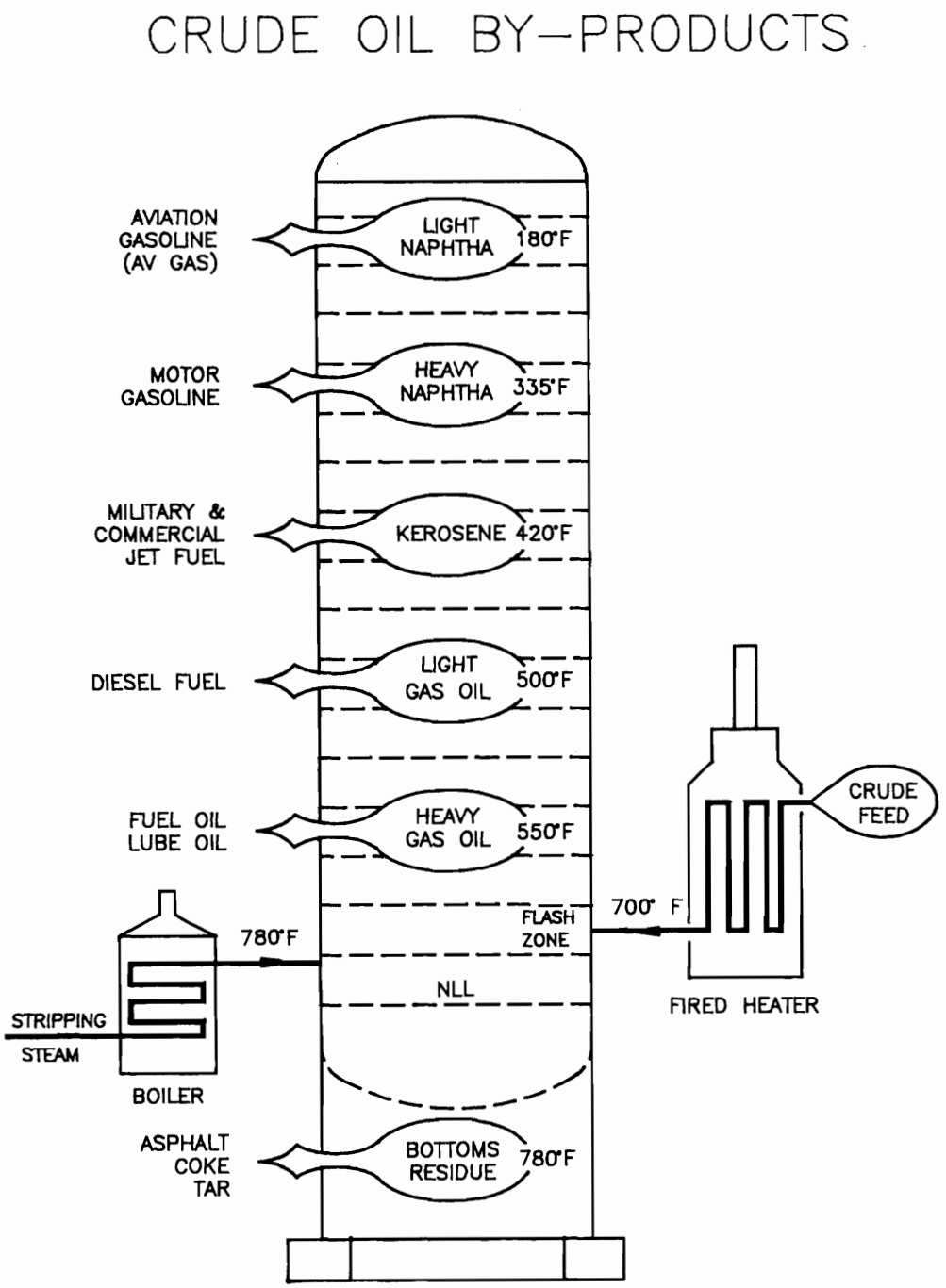

Figure 6-22. Crude oil products.

- *Skirt fireproofing*. Generally brick or gunite, fireproofing is applied around the interior and exterior walls of a vessel skirt. It is necessary to prevent damage to vessel skirt in case a fire occurs.
- *Nozzle*. The tie-in connection between the vessel or equipment and the piping system. Nozzles are provided in locations where a commodity is either introduced or removed from a vessel or piece of equipment.
- *Nozzle orientation*. The angular arrangement of nozzles around the perimeter of a vessel's shell.
- *Nozzle projection*. Used to establish the distance from the vessel's centerline to the nozzle's face of flange.

- *Reinforcing pad.* A plate contoured to the shape of a vessel shell. It is positioned around nozzles and provides additional strength in the areas where metal was removed from the shell.
- *Manholes.* Similar to large nozzles that allow workers entry points into a vessel. They generally are 18″ ID and are accessible by ladders and platforms. When not in use, the manhole is sealed with a blind flange.
- *Manhole hinge.* A hinge that creates a pivot point allowing the blind flange attached to the manhole to be easily removed for worker entrance.
- *Seal pan.* A tray installed below the bottom tray in a vessel to prevent liquids from bypassing the trays.
- *Trays.* Flat metal plates spaced approximately 18″ to 24″ apart inside a vertical vessel. They can be bolted or welded to the vessel shell. Trays are perforated to allow rising vapors and falling liquids to pass through with the aid of a valving mechanism called a *cap*.
- *Weir.* A dam-like plate welded on a tray that allows a fractionated by-product to collect and be extracted by a nozzle.
- *Downcomers.* Openings adjacent to a tray that allow liquids flowing over a weir plate to fall to the tray below and begin the fractionation process over again.
- *Insulation rings.* Continuous circular rings welded to the exterior of a vertical vessel that support a vessel's insulation. They are typically spaced on 12′–0″ centers.
- *Saddles.* U-shaped supports welded on horizontal vessels and exchangers. Saddles are bolted to concrete foundations and create a cradle-like support in which the vessel can rest.
- *Lifting lugs.* Donut-shaped rings welded to the vessel's shell or head that allow the vessel to be raised and positioned during installation.

VENDOR DATA DRAWINGS

With a myriad of piping facilities in operation, one should not expect specialized piping equipment to be an item stored in a warehouse or found on a shelf like parts for an automobile. Each piece of equipment has certain criteria that must be met before it can become part of a process unit, boiler room, or production facility. Although duplicate pieces of equipment are found within the same facility, every piping facility has equipment installations unique unto itself. Therefore equipment must be specifically developed for each situation.

Once specific performance requirements for equipment have been established by engineering, process, and other design groups, purchase orders are placed with companies called *vendors* who specialize in manufacturing such equipment. While equipment such as pumps and compressors are considered to be somewhat "standard" and are readily available, other equipment such as vessels and exchangers must be custom-made for a specific application. Vendors provide engineering and construction companies data drawings that show exact measurements, locations, pound ratings, and sizes of the newly manufactured item. Engineering companies then use the information found on these vendor data drawings as a reference so pipe connecting to the piece of equipment can be designed and drawn with precision. Vendor data drawings also provide designers the necessary information required to build foundations, locate supports, and calculate interferences without having the actual piece of equipment available to measure.

DRAWING EQUIPMENT

Vendor data drawings are valuable sources of information when the need to represent equipment on a piping drawing arises. Although piping drawings do not require the duplication of all the information shown on equipment data drawings, they do require representation of overall equipment lengths and heights, and nozzle sizes, locations, orientations, and pound ratings. The drawings shown in the Figures 6-23 and 6-24 are typical representations of vendor data drawings for a shell and tube exchanger and horizontal vessel.

Piping drawings created by hand can be tedious and time-consuming. The step-by-step process shown in Figure 6-25 can be used as a guide to develop the various components of a horizontal vessel. The measurements used to draw the plan and elevation views of the vessel are taken from the vendor data drawing shown in Figure 6-24. This vessel will be equipped with a 2:1 semi-elliptical head. Drawing a vessel's shell is not difficult, but development of the 2:1 semi-elliptical head requires the step-by-step procedure shown in Figure 6-26.

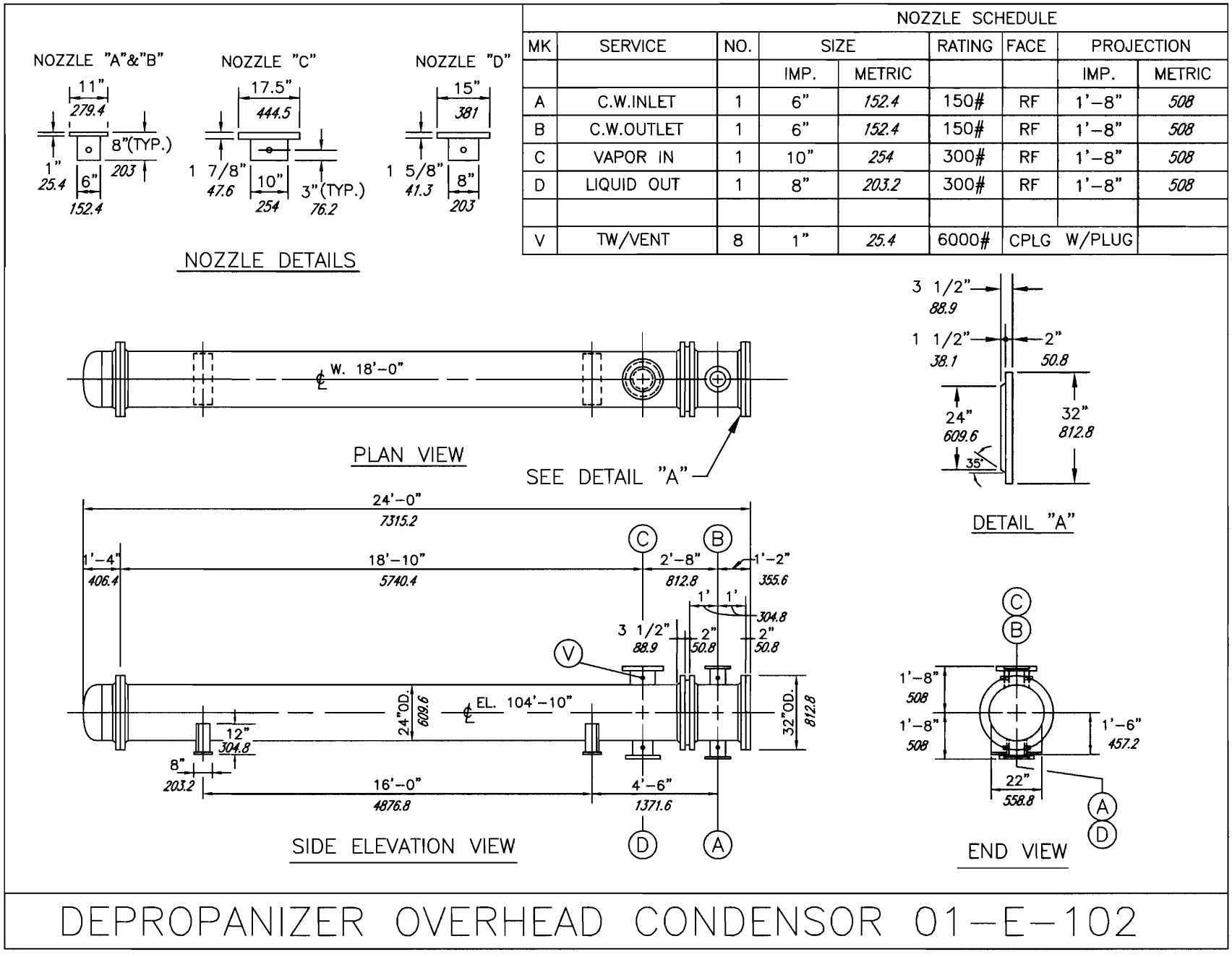

NOZZLE SCHEDULE

MK	SERVICE	NO.	SIZE		RATING	FACE	PROJECTION	
			IMP.	METRIC			IMP.	METRIC
A	C.W.INLET	1	6"	152.4	150#	RF	1'-8"	508
B	C.W.OUTLET	1	6"	152.4	150#	RF	1'-8"	508
C	VAPOR IN	1	10"	254	300#	RF	1'-8"	508
D	LIQUID OUT	1	8"	203.2	300#	RF	1'-8"	508
V	TW/VENT	8	1"	25.4	6000#	CPLG	W/PLUG	

Figure 6-23. Shell and tube exchanger vendor data drawing.

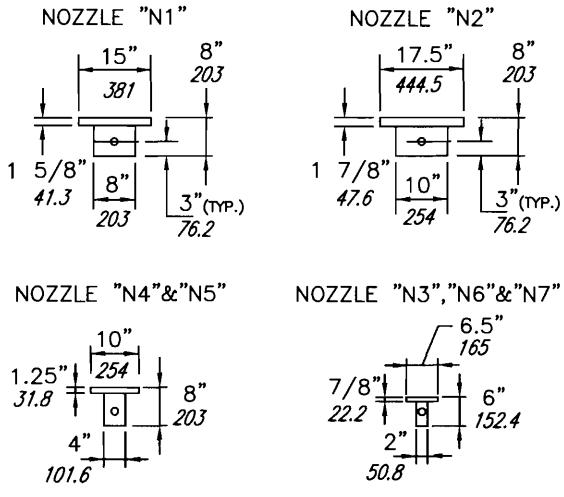

NOZZLE DETAILS

NOZZLE SCHEDULE								
MK	SERVICE	NO.	SIZE		RATING	FACE	PROJECTION	
			IMP.	METRIC			IMP.	METRIC
N1	LIQUID IN	1	8"	203.2	300#	RF	2'-8"	812.8
N2	LIQUID OUT	1	10"	254.0	300#	RF	2'-8"	812.8
N3	DRAIN	1	2"	50.8	300#	RF	2'-6"	762
N4	VAPOR OUT	1	4"	101.6	300#	RF	2'-6"	762
N5	RELIEF	1	4"	101.6	300#	RF	2'-6"	762
N6	LEVEL GAGE	1	2"	50.8	300#	RF	2'-6"	762
N7	LEVEL GAGE	1	2"	50.8	300#	RF	2'-4"	711.2
C1	VENT	1	1"	25.4	6000#	CPLG	W/PLUG	
M1	MANWAY	1	18"	457.2	300#	RF	2'-10"	863.6

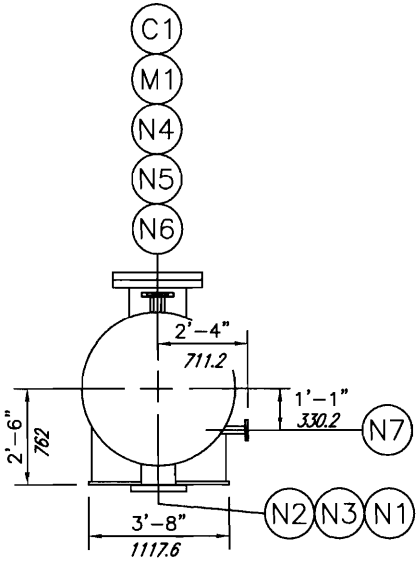

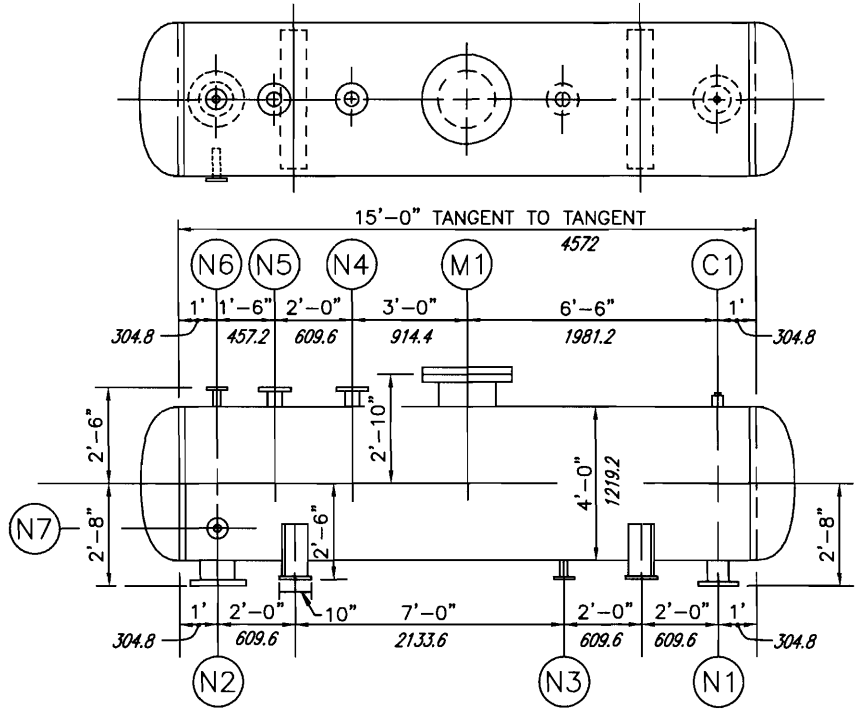

DEPROPANIZER REFLUX ACCUMULATOR 01-V-102

Figure 6-24. Horizontal vessel vendor data drawing.

Drawing the Horizontal Vessel

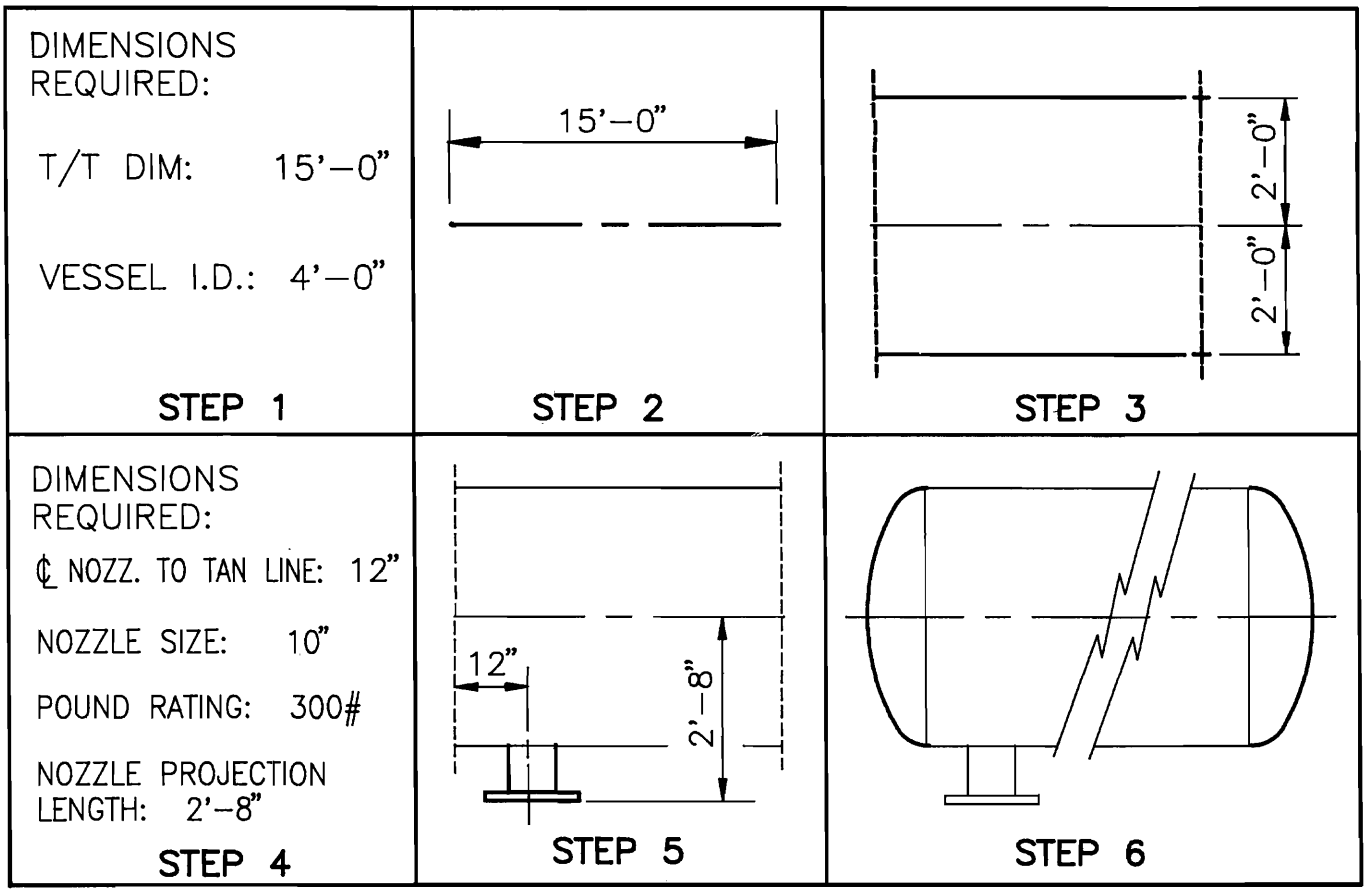

Figure 6-25. Steps for drawing the plan and elevation views of a horizontal vessel.

Step 1. Determine the vessel's diameter and length as provided by the vendor drawing. Using the measurements from Figure 6-24, the vessel's ID is 4′-0″ and its length from tangent line to tangent line is 15′-0″.

Step 2. Draw a horizontal centerline equal to the vessel's length.

Step 3. Draw vertical construction lines on each end of the centerline. Along the right vertical line, measure one-half of the vessel's ID (2′-0″) above and below the centerline. The total height should be equal to the vessel's ID (4′-0″). From these two points draw horizontal lines to the left end of the vessel.

Step 4. From measurements provided on the vendor drawing, determine the following values for nozzle **N2**: nozzle projection length (2′-8″), nozzle size (10″), pound rating (300#), and the distance the nozzle measures from the tangent line (12″).

Step 5. From the left tangent line, draw a parallel line 12″ to the right to establish the centerline of nozzle **N2**. From the centerline of the vessel, draw a parallel line 2′-8″ below, to establish the face of the nozzle. Using dimensions found on the 300# flange dimensioning chart in Appendix A, draw the nozzle using the flange's OD (17½″) and face thickness (1⅞″).

Step 6. Use the drawing procedure shown in Figure 6-26 to draw the 2:1 semi-elliptical heads.

Drawing the 2:1 Semi-elliptical Head

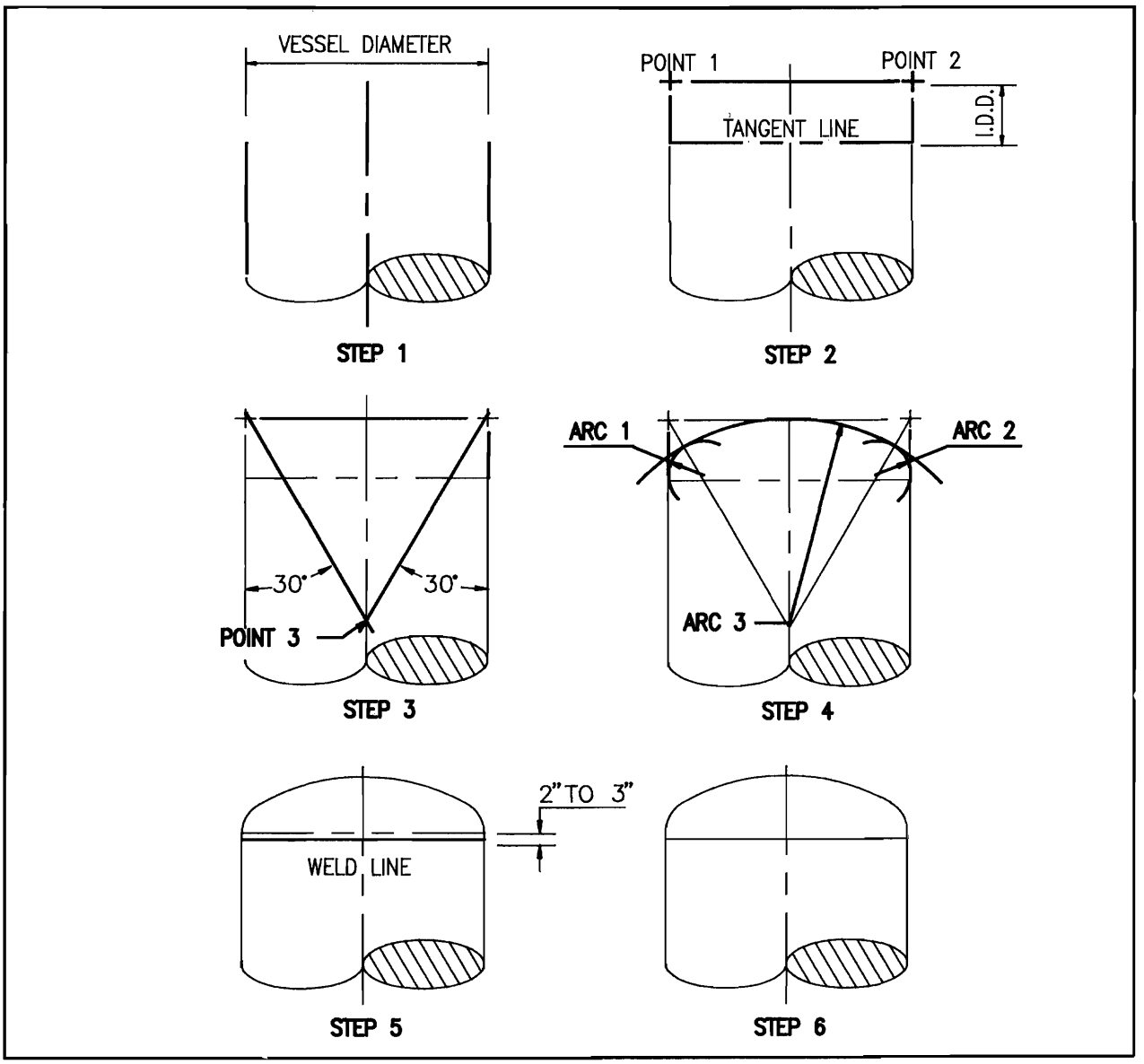

Figure 6-26. Steps for drawing a 2:1 Semi-elliptical head.

Step 1. Draw parallel lines to establish the vessel's diameter. Locate the vessel's center by drawing a centerline.

Step 2. Draw a horizontal line connecting the two ends of the vessel. This line will represent the vessel's tangent line. Draw a line above and parallel to the tangent line that is a distance equal to the IDD dimension. Use the following formula to establish the IDD dimension.

IDD = vessel diameter × .25

Locate Points 1 and 2 by extending a line from the end of the vessel to intersect the IDD line.

Step 3. Establish Point 3 by drawing 30° lines from Points 1 and 2 that will intersect on the vessel's centerline.

Step 4. Construct Arc 1 by drawing an arc having its center at the intersection of the 30° line and the tangent line. The radius of this arc is measured from the point of intersection to the end of the vessel. Arc 2 is constructed in a similar manner. Arc 3 is drawn from the intersection of the two 30° lines to the point where the arc crosses the 30° line.

Step 5. Construct a weld line by drawing a line parallel to the tangent line 2" to 3" below. Trim the arcs as necessary. Erase all construction lines.

Step 6. Darken the remaining arcs and erase the tangent line.

CHAPTER 6 REVIEW QUIZ

1. Define equipment.

2. What is an accumulator?

3. Explain fractional distillation.

4. What is a by-product?

5. What does a pump do?

6. What are the five pump nozzle configurations?

7. Name three types of pump drivers.

8. What does a compressor do?

9. Describe the function of an exchanger.

10. How does a cooling tower perform its function?

11. What items are typically found on a tank farm?

12. Name some of the common by-products derived from crude oil feed stock?

13. What internal device is used as a separator and collector of molecules in a fractionation column?

14. Which directions do light and heavy molecules travel within a fractionation column?

15. Where is the dimensional data used to draw piping equipment found?

EXERCISES: DRAWING EQUIPMENT

Chapter Six Drawing Exercises

Exercise 6-1. Draw the plan and elevation views of the shell and tube exchanger as shown in Figure 6-23 to ⅜″ = 1′-0″ scale.

Exercise 6-2. Draw the plan and elevation views of the horizontal vessel as shown in Figure 6-24 to ⅜″ = 1′-10″ scale.

Flow Diagrams and Instrumentation

Flow diagrams describe in a schematic drawing format the flow of fluids and gases through a unit or an entire plant. By using symbols to represent various pieces of equipment, the flow diagram provides the piping designer with an overall view of the operation of a facility.

The flow diagram used in this chapter is representative of the types used by many companies in the piping industry. While actual symbols may vary slightly from one company to the next, the "look and feel" of flow diagrams is the same throughout the piping industry.

Students must become familiar with the piping, equipment, instrumentation symbols and abbreviations used on flow diagrams, in order to be able to "read" and interpret them.

One of the most difficult concepts for students to comprehend is the absence of scale in the preparation of flow diagrams. The flow diagram should be laid out in a very simplistic and logical order and be read from left to right. It guides the drafter and designer in the same manner a road map guides a traveler.

USES OF FLOW DIAGRAMS

The flow diagram is used by the piping group to develop and lay out the plot plan. When developing the plot plan, the arrangement of the equipment in the facility reflects, in part, the logical sequence of flow depicted on the flow diagram. However, many other factors such as code requirements, client standards and preferences, worker safety, and cost also influence the positioning of equipment.

Once the plot plan is finalized, the piping designer routes the pipe between two vessels as indicated by the flow diagram using piping specifications and accepted design practices. The flow diagram is usually "yellowed out" as each line is completed and incorporated into the design.

TYPE OF FLOW DIAGRAMS

Process engineers are responsible for developing flow diagrams. In many large engineering firms, an entire department is dedicated to the development of flow diagrams. Today almost all flow diagrams are laid out with CAD, using third-party piping packages such as Pro-Flow or individually developed company packages.

Process Flow Diagram

The process flow diagram is the first flow diagram developed by the flow diagram department. It includes the following:

1. major equipment
2. main piping
3. direction of flow
4. operating pressure and temperature
5. major instrumentation

The process flow diagram will denote the following:

- Conditions to be used for the design of various pieces of equipment (fractionation columns, pumps, heaters, etc.) required for facility operation.
- Operating and design conditions under which a particular unit or piece of equipment will normally operate. Design conditions establish the limits that equipment used in the facility can withstand. Design pressure is calculated to be at least 10% above the maximum operating pressure or 25# greater (whichever is largest). The design temperature will be at least the maximum operating temperature, but should be at least 25 degrees above the normal operating temperature.
- Composition of the commodities used in the process sequence as they enter and leave the unit.

Figure 7-1 shows a sample process flow diagram.

Mechanical Flow Diagram

From the process flow diagram, the mechanical group develops the mechanical flow diagram. The mechanical flow diagram provides much more detailed data than the process flow diagram. Many companies refer to the mechanical flow diagram as the "P & ID" (process and instrument diagram). Often referred to as the bible of the design process, this drawing provides the pipe drafter with the design criteria for the unit. Mechanical flow diagrams include the following:

1. pipe line numbers and direction of flow
2. pipe specifications and line sizes
3. all equipment
4. all valves
5. all instrumentation with controlling devices

The mechanical flow diagram defines the exact sequence in which all equipment, valves, instrumentation, connections, etc., are to be made on each pipe throughout the facility.

Figure 7-2 shows a sample of the mechanical flow diagram.

The Utility Flow Diagram

The utility flow diagram shows the piping, valves, and instrumentation for the basic plant utilities. Utilities are services that are essential to the proper function of the plant. These utilities correspond to some of the same utilities used in a typical house, such as water, gas, and sewer drains.

Some of the common plant utilities are:

- steam
- fuel oil
- instrument air
- drainage systems
- condensate
- utility air
- cooling water
- flare system

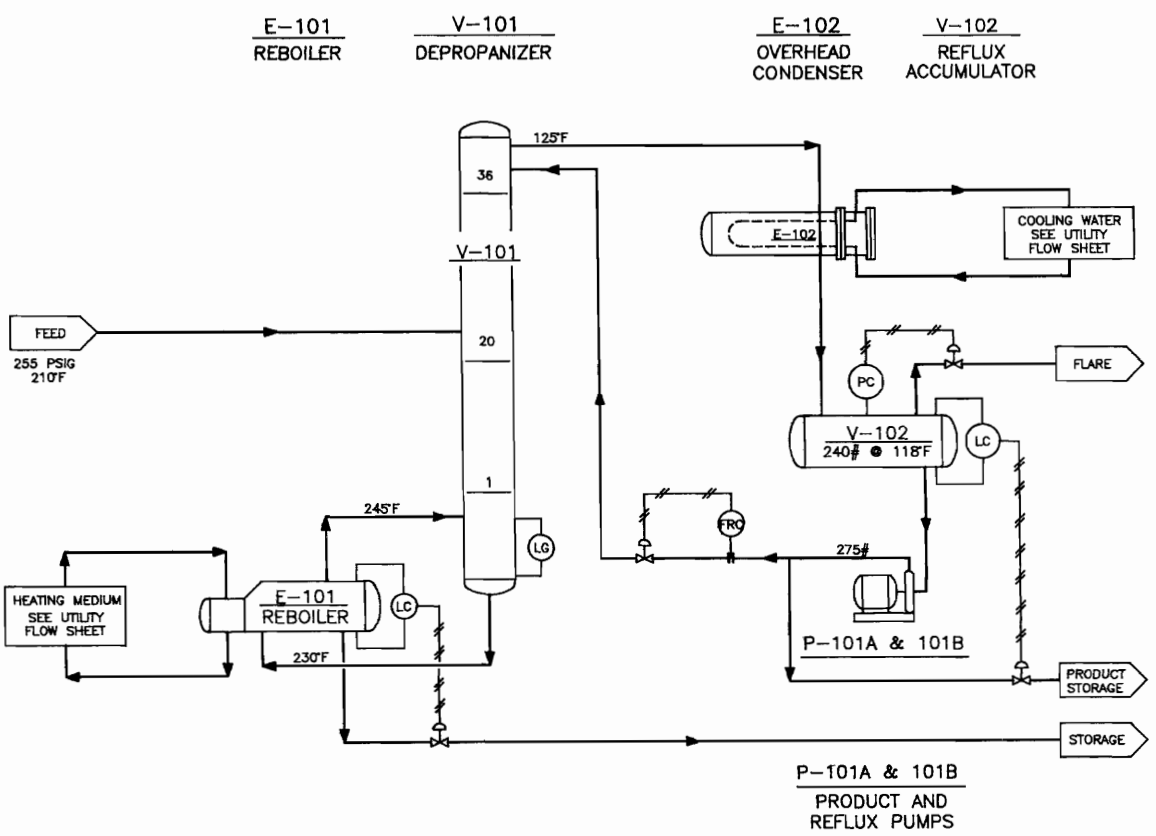

Figure 7-1 shows a sample of the process flow diagram.

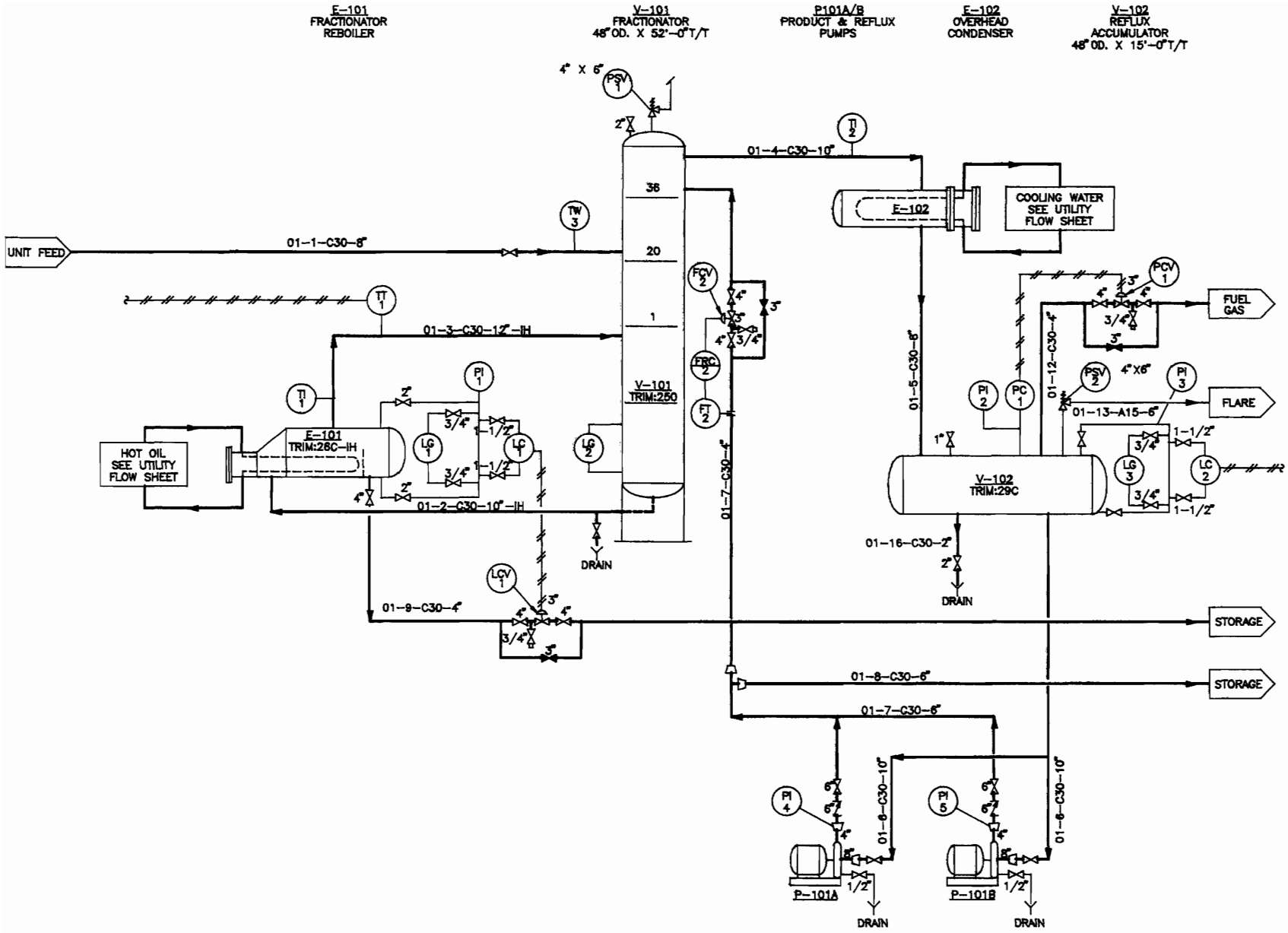

Figure 7-2 shows a sample of the mechanical flow diagram.

The flow diagram is a dynamic document. It may be revised and updated during the project to reflect the client's changes or modifications imposed by governmental regulations.

Figure 7-3 shows a sample utility flow diagram.

FLOW DIAGRAM INSTRUMENTS

Instruments function by sensing changes in the variables they monitor. The four basic instrument groups are:

Flow	(F)
Level	(L)
Pressure	(P)
Temperature	(T)

The types of instruments used to sense, control and monitor these variables are:

Controller	(C)
Indicator	(I)
Gauge	(G)
Alarm	(A)
Recorder	(R)

By learning these nine terms, students will be able to understand most of the instrument symbols found on a mechanical flow diagram.

Figure 7-4 illustrates a combination of the symbols and abbreviations used to represent an instrument's function on flow diagrams. The first letter in the symbol indicates the instrument group, and the second and/or third letters indicate the instrument type.

To indicate a change or to control the flow, level, pressure, or temperature, an instrument must first sense a change in the variable. Once a change has been detected, the instrument then transmits this information via mechanical, electronic, or pneumatic means to a control panel where it can be observed and recorded. At the same time, the instrument may activate other devices to affect and change process conditions in the facility. Some instruments are read in the plant at the instrument's actual location. Others are displayed on a control panel located in an operator's control room.

Instrument Types

Gauges. Gauges are instruments that measure the liquid level inside a vessel or the temperature and/or pressure in the piping system. Level, temperature, or pressure gauges are locally mounted to enable plant operators to obtain a visual reading.

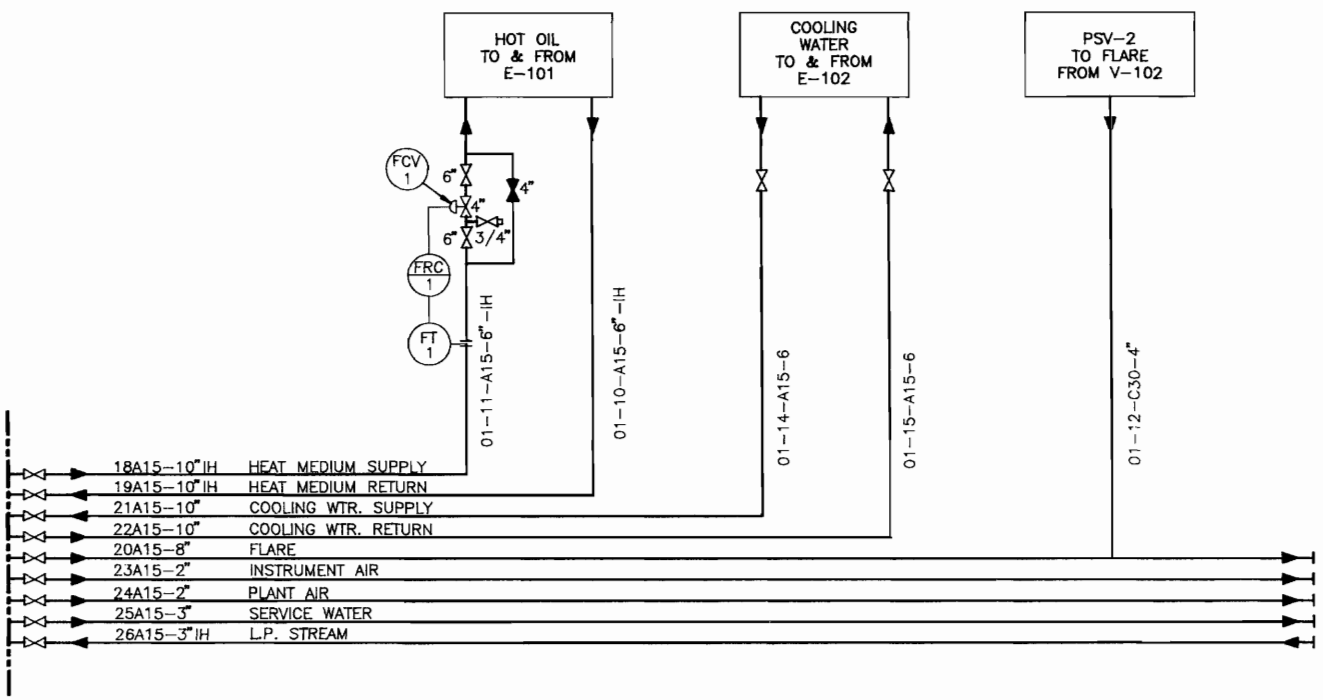

Figure 7-3 shows a sample of the utility flow diagram.

LOCALLY MOUNTED INSTRUMENT

BOARD MOUNTED INSTRUMENT

FLOW INSTRUMENTS

- FA — FLOW ALARM
- FE — FLOW ELEMENT
- FI — FLOW INDICATOR
- FR — FLOW RECORDER
- FRC — FLOW RECORDING CONTROLLER

LEVEL INSTRUMENTS

- LA — LEVEL ALARM
- LAH — LEVEL ALARM HIGH
- LAL — LEVEL ALARM LOW
- LC — LEVEL CONTROLLER
- LG — LEVEL GLASS
- LI — LEVEL INDICATOR
- LIC — LEVEL INDICATING CONTROLLER
- LRC — LEVEL RECORDING CONTROLLER

TEMPERATURE INSTRUMENTS

- TA — TEMPERATURE ALARM
- TI — TEMPERATURE INDICATOR
- TR — TEMPERATURE RECORDER
- TRC — TEMPERATURE RECORDING CONTROLLER
- TW — TEMPERATURE WELL

PRESSURE INSTRUMENTS

- PC — PRESSURE CONTROLLER
- PI — PRESSURE INDICATOR
- PR — PRESSURE RECORDER
- PIC — PRESSURE INDICATING CONTROLLER
- PRC — PRESSURE RECORDING CONTROLLER
- PSV — PRESSURE SAFETY VALVE
- RV — RELIEF VALVE

MISCELLANEOUS SYMBOLS

- T — TRANSMITTER (OR)
- HCV — HAND CONTROL VALVE

Figure 7-4 Flow diagram instrument symbols.

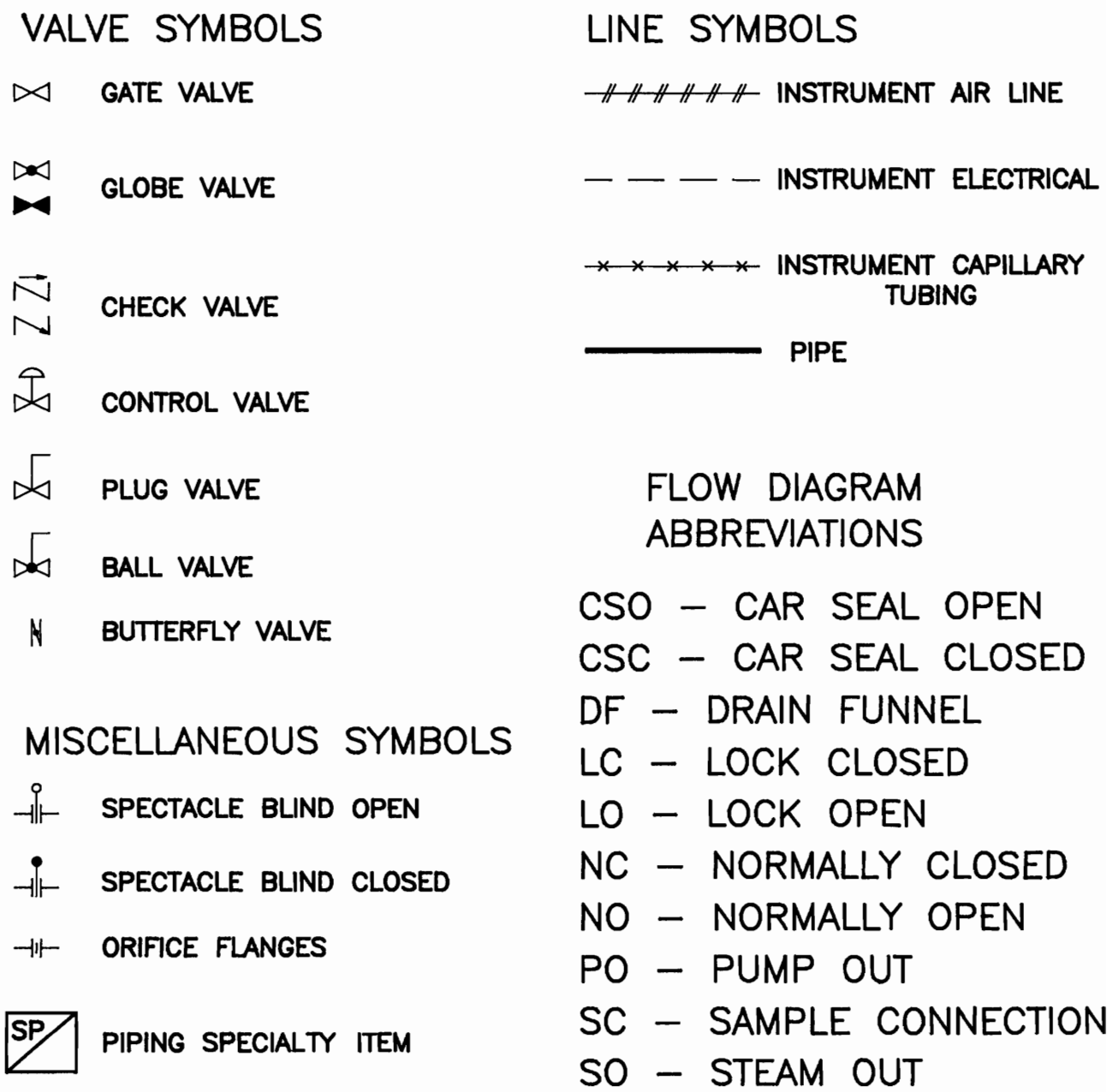

Figure 7-5. Flow diagram and abbreviations.

Controllers. Devices used to maintain a specified liquid level, temperature, pressure, or flow inside a vessel or piping system. They activate the control valve that regulates the level, temperature, pressure, and flow in and out of the vessel.

Alarms. Signals via lights or horns that indicate the liquid level, temperature, or pressure inside a vessel is too high or too low or that there is no flow or reverse flow.

Indicators. Devices used to indicate the liquid level, temperature, pressure or flow rate inside a piping system.

Recorders. Devices used to record the liquid level, temperature, pressure, and flow rate inside a vessel or piping system throughout a certain shift or period of time.

These same instruments may be found in combination such as Level Recording Controller. Here the instrument not only records the liquid level but also sends a signal to a control valve to control the liquid level inside the vessel.

PIPING SYMBOLS

Figure 7-5 shows some flow diagram piping symbols. Notice all valves, no matter the pipe size and pound rating, are drawn the same size. Generally, nozzles and reducers are not shown on the mechanical flow diagram. The flow diagram in Figure 7-2 shows reducers in order to aid the students in visualizing and understanding the flow diagram and its relationship to the actual piping arrangement drawing. Symbols used on flow diagrams represent the actual piece of equipment. Typically these symbols have some resemblance to the actual pieces of equipment in the field.

FLOW PLAN ARRANGEMENT

The flow plan should be arranged in a logical order of flow. The main flow through the unit should be obvious by even a brief examination of the flow plan. Use the following checklist as an aid when developing a flow diagram.

- Avoid crossing lines where possible.
- Space equipment on the sketch to avoid overcrowding.
- Use notes with symbols where necessary for clarity.
- Use arrows to show flow direction.
- Show equipment numbers when it is necessary to identify equipment.
- Show control systems on the sketch. The control scheme is frequently the most important part of a flow plan sketch.
- Show important valves, orifice flanges, and control valves.
- Show flow directions through exchangers with arrows.
- Do not run lines diagonally across the drawing.
- Label feed lines entering the unit from the field where the line enters the unit. Label product lines leaving the unit by name.
- Do not draw lines any closer together than necessary.

CHAPTER 7 REVIEW QUIZ

1. List five items shown on the process flow diagram.

_____
_____
_____
_____

2. List five items shown on the mechanical flow diagram.

_____
_____
_____
_____

3. List the four basic instrument groups.

_____
_____
_____
_____

4. List the five instrument functions.

_____
_____
_____
_____

5. What type of instrument is used to maintain a certain liquid level?

_____
_____
_____
_____

6. Identify the following instrument abbreviations:
   a. LG _____
   b. FA _____
   c. TI _____
   d. PC _____
   e. TRC _____
   f. LC _____
   g. PSV _____
   h. HCV _____
   i. LAH _____
   j. LAL _____
7. Identify the following flow diagram abbreviations:
   a. DF _____
   b. SC _____
   c. CSO _____
   d. LC _____
   e. NO _____

EXERCISE INFORMATION

Use the instructions accompanying Figure 7-6 to create the flow diagram symbols with **AutoCAD** as shown. Use the **BASE** command to place the base point as indicated. **BLOCK** each object using the exact symbol name provided. **OOPS** the symbol to redisplay. **SAVE** the drawing as **FLOSYMBL**.

Exercises 1, 2, and 3

Recreate the flow diagrams as shown. Using the symbols in Figure 7-6 where applicable. Symbols representing other pieces of equipment can be developed on an as-needed basis. Although equipment is not drawn to scale, it should be proportional to the other symbols used in the drawing.

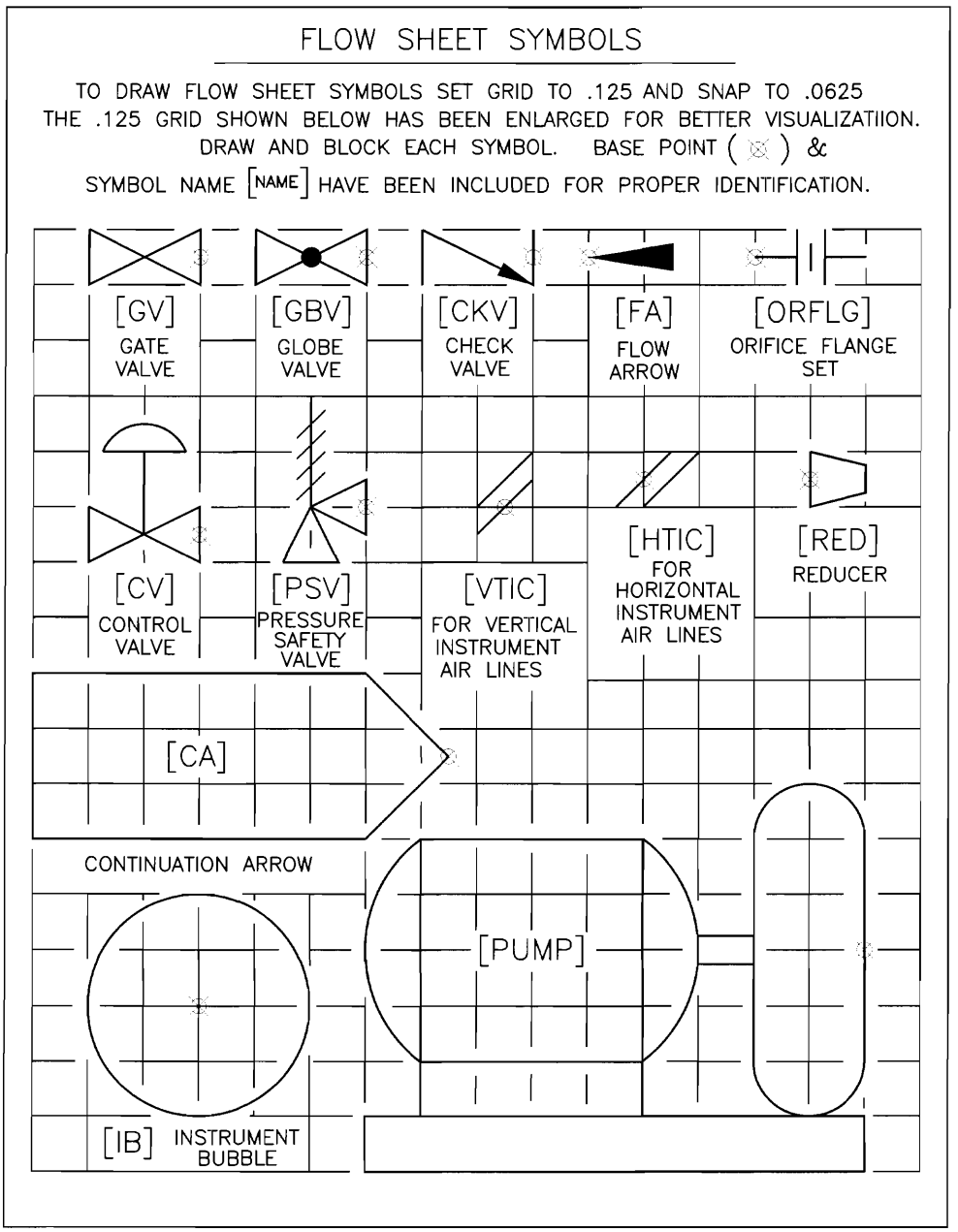

Figure 7-6. Flow diagram exercise symbols.

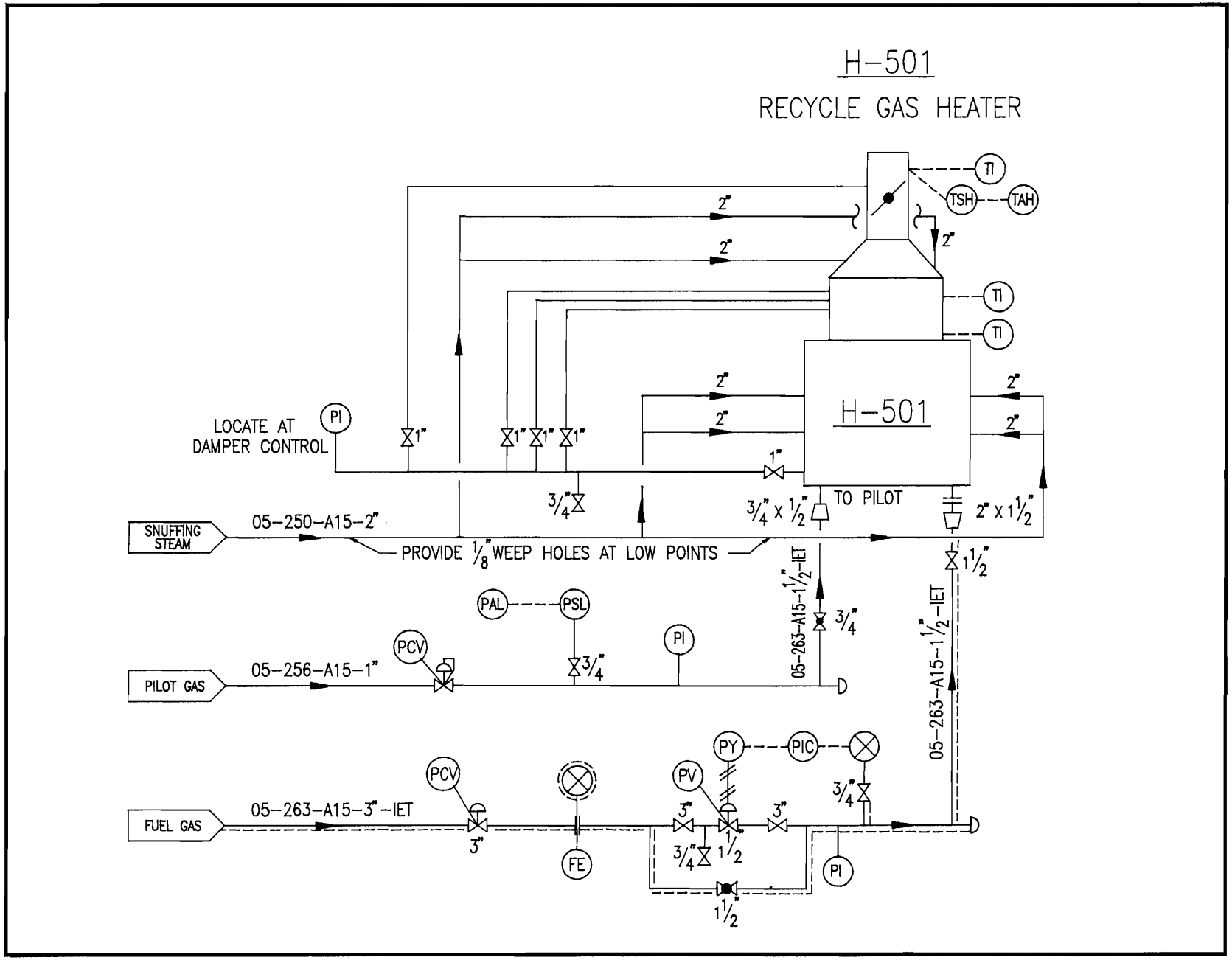
H-501
RECYCLE GAS HEATER
TI
TSH
TAH
2"
2"
2"
TI
TI
2"
2"
H-501
2"
2"
LOCATE AT
DAMPER CONTROL
PI
1"
1"
1"
1"
1"
3/4"
3/4" x 1/2"
TO PILOT
2" x 1 1/2"
SNUFFING STEAM
05-250-A15-2"
PROVIDE 1/8" WEEP HOLES AT LOW POINTS
1 1/2"
05-263-A15-1 1/2"-IET
3/4"
PAL
PSL
PI
PCV
3/4"
PILOT GAS
05-256-A15-1"
05-263-A15-1 1/2"-IET
PY
PIC
PCV
PV
3/4"
FUEL GAS
05-263-A15-3"-IET
3"
3"
3"
3/4"
1 1/2
FE
PI
1 1/2

EXERCISE 7-1

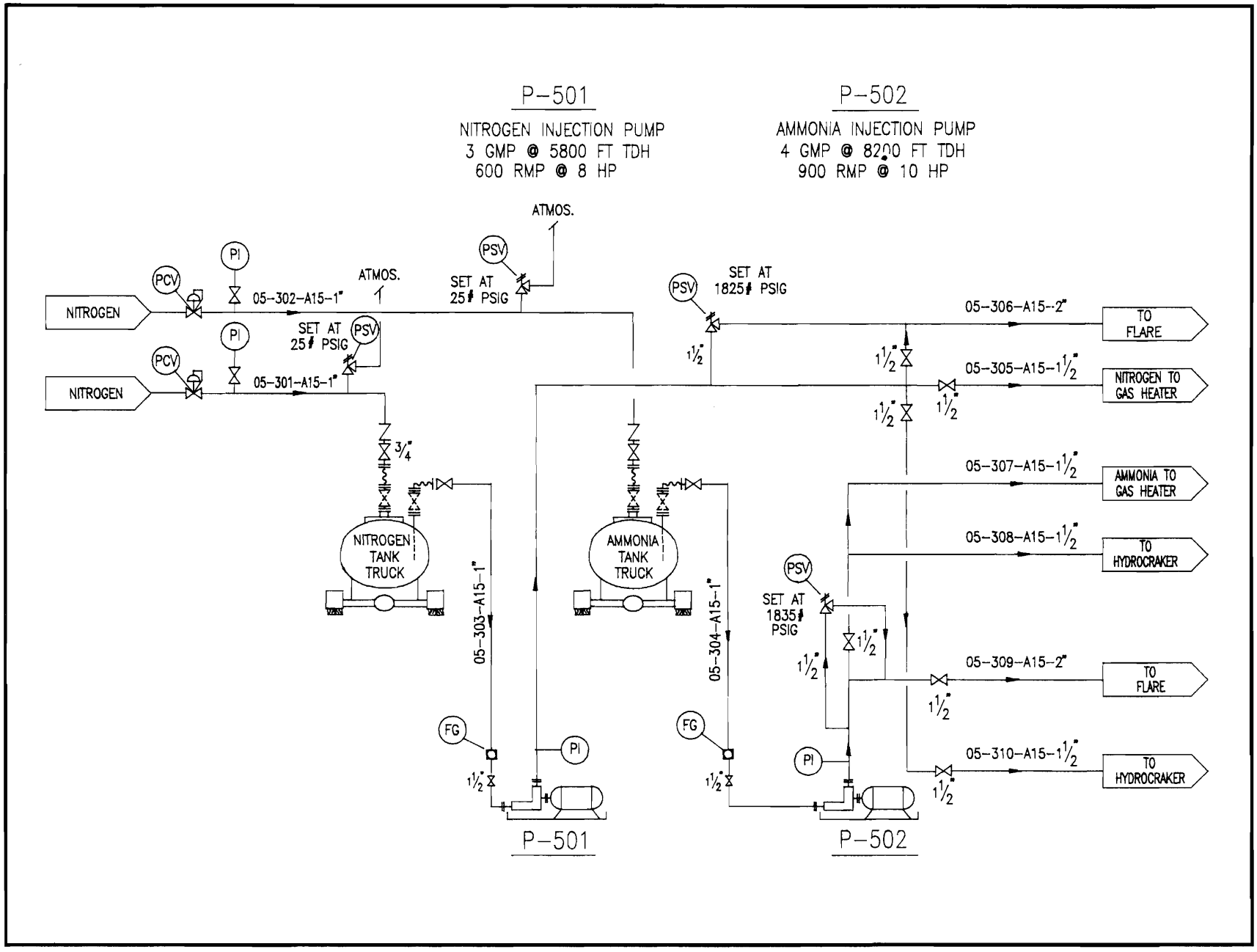
P-501
NITROGEN INJECTION PUMP
3 GMP @ 5800 FT TDH
600 RMP @ 8 HP
P-502
AMMONIA INJECTION PUMP
4 GMP @ 8200 FT TDH
900 RMP @ 10 HP
ATMOS.
ATMOS.
PI
PCV
NITROGEN
05-302-A15-1"
SET AT 25# PSIG
PSV
PI
PCV
NITROGEN
05-301-A15-1"
SET AT 25# PSIG
PSV
3/4"
NITROGEN TANK TRUCK
AMMONIA TANK TRUCK
05-303-A15-1"
05-304-A15-1"
FG
FG
PI
PI
1 1/2"
P-501
P-502
PSV
SET AT 1825# PSIG
05-306-A15-2"
TO FLARE
05-305-A15-1 1/2"
NITROGEN TO GAS HEATER
05-307-A15-1 1/2"
AMMONIA TO GAS HEATER
05-308-A15-1 1/2"
TO HYDROCRAKER
PSV
SET AT 1835# PSIG
05-309-A15-2"
TO FLARE
05-310-A15-1 1/2"
TO HYDROCRAKER

EXERCISE 7-2

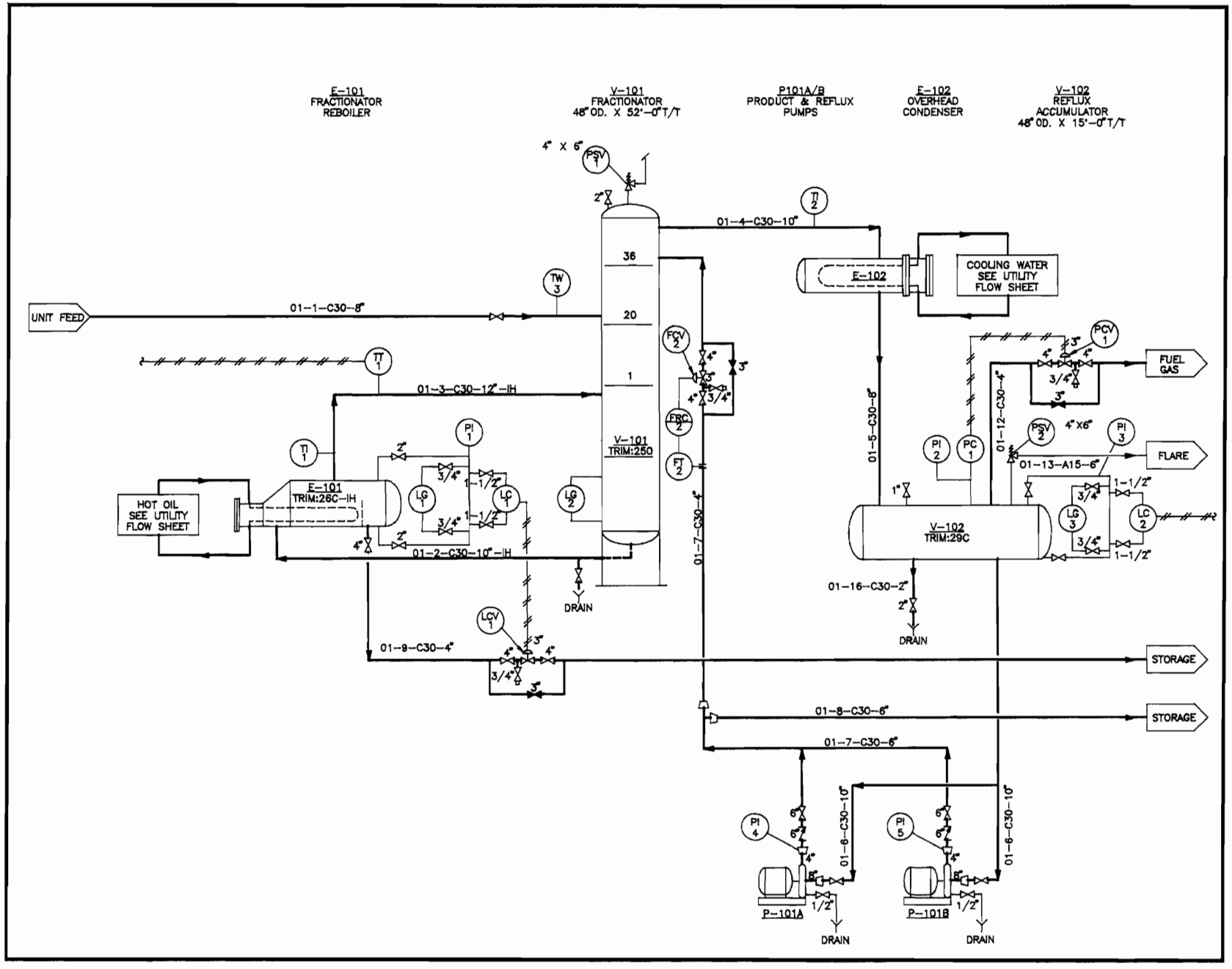
E-101
FRACTIONATOR
REBOILER
V-101
FRACTIONATOR
48" OD. X 52'-0" T/T
P101A/B
PRODUCT & REFLUX
PUMPS
E-102
OVERHEAD
CONDENSER
V-102
REFLUX
ACCUMULATOR
48" OD. X 15'-0" T/T
UNIT FEED
01-1-C30-8"
01-2-C30-10"-IH
01-3-C30-12"-IH
01-4-C30-10"
01-5-C30-8"
01-7-C30-4"
01-8-C30-6"
01-9-C30-4"
01-12-C30-4"
01-13-A15-6"
01-16-C30-2"
01-7-C30-6"
01-8-C30-10"
01-6-C30-10"
HOT OIL
SEE UTILITY
FLOW SHEET
E-101
TRIM:26C-IH
V-101
TRIM:250
E-102
COOLING WATER
SEE UTILITY
FLOW SHEET
V-102
TRIM:29C
FUEL
GAS
FLARE
STORAGE
STORAGE
DRAIN
DRAIN
DRAIN
DRAIN
P-101A
P-101B

EXERCISE 7-3

Codes and Specifications

As anyone who has ever played a game can tell you, there are specific rules that must be followed if the game is to be played correctly. The same holds true for building a piping facility. Just as the rules of a game establish the basic guidelines for play, codes and specifications establish guidelines for piping facilities to ensure everything from quality construction to worker safety.

Codes are a broad-based set of guidelines that govern the total scope of a project. Codes originate from a number of sources. Some sources are governmental agencies such as OSHA or the EPA and some are organizations such as ANSI (American National Standards Institute) that developed the Petroleum Refinery Piping Code B31.3 that governs operational procedures for refinery piping.

Specifications, on the other hand, are developed as a specific set of guidelines for design, fabrication, and construction of a piping facility. Written to maintain consistency and uniformity throughout all phases of a project, *specs* are very detailed. Codes can be as broad as statements indicating that all facilities must be built in accordance with ANSI standards, while specs are so detailed they can include instructions to a painter indicating which pipe to paint red.

As we look at codes and specs, remember that they have been developed through years of trial and error. When something purchased didn't fit, something built broke, or something boiled blew up, someone made a note of the mistake, remembered it the next time a similar situation occurred, and made it an operational procedure. The operational procedure evolved into a piping code.

CODES

Though you may not be familiar with codes specific to piping facilities, you are familiar with an ordinary structure to which codes also apply: the typical house. Codes have been written concerning door sizes, window sizes, lumber sizes, electrical requirements, etc. As an example, the minimum width of a front entry door is 3′-0″. Windows in sleeping rooms must have a net area of 5.7 sq. ft. with a minimum opening height of 2′-0″ and width of 1′-8″.

Codes for piping facilities have been implemented in a similar fashion. Regulations have been established for pressure and temperature limits, material composition and stresses, worker safety, emergency evacuation procedures, and many more. Table 8-1 provides a partial listing of the codes written for piping facilities.

Table 8-1
Piping Facility Codes

Code Designations	Titles
ANSI B31.1	Power Piping
ANSI B31.3	Petroleum Refinery Piping
ANSI B31.5	Refrigeration Piping
ASME	Boiler and Pressure Vessels

SPECIFICATIONS

As previously mentioned, specifications stipulate specific details for design, fabrication, and construction. Specifications are used by many groups to achieve a common goal. Engineers, designers, and drafters must use specs to establish sizes, pound ratings, and dimensions of pipe and equipment. Stress calculations are made from information provided in the specs to ensure columns, beams, and supports will withstand the loads and forces placed on them. Purchasing personnel need specs to ensure proper materials and equipment are bought. Welders and fabricators use specs to erect structures, supports, and route the proper size pipe. Specs also provide workers installing instrumentation controls proper temperature and pressure settings.

Specs for a house might include the drawing scale to which the construction drawings were created. They may require the use of a particular grade of lumber or specify the thickness of insulation to be installed in the attic. Specs inform someone which color of carpet to buy or from what manufacturer to order the water heater.

When applied to a piping facility, specs become quite lengthy. Comprising volumes of printed material, specs often seem never-ending. Two sample sections from a typical specification document are provided below.

6.0 Drawings and Design Procedures

6.1 Piping arrangement drawings are plan views that show pipe in sufficient detail to indicate pipe routing, anchors, guides, supports, intersections, and provisions for expansion.

6.2 Piping arrangement drawing dimensions shall be shown in feet and inches. Inches shall be used when dimensions are less than 1′-0″. Dimensions will be shown to the nearest 1/16″.

6.3 Intersecting coordinates will be used to position all buildings, pipe supports, and equipment. Equipment shall include vessels, pumps, exchangers, boilers, heaters, and cooling towers.

6.3.1 Pipe shall be dimensioned from coordinates to show location. Elevations shall be used to indicate height measurements.

6.4 Standard piping symbols shall be used throughout. Piping drawings shall be drawn to a 3/8″ = 1′-0″ scale. Detail drawings shall be larger as necessary. Pipe 12″ and smaller shall be drawn single line. Pipe 14″ and larger shall be drawn double line. In congested areas double line drawings may be used for clarity.

6.5 Flow arrows will indicate flow direction of each line. Line numbers shall be assigned to each pipe line. A typical line number is shown in Figure 8-1.

7.0 Clearances and Accessibility

7.1 Roadways

7.1.1 Minimum headroom clearance over secondary roadways is 10′-0″.

7.1.2 Minimum width of secondary roadways is 10′-0″ excluding 3′-0″shoulders.

7.2 Walkways

7.2.1 Maintain a minimum headroom clearance of 7′-0″.

7.2.2 Maintain a minimum horizontal clearance of 2′-6″.

7.3 Platforms

7.3.1 Minimum platform width is 2′-6″.

7.3.2 Minimum headroom clearance above platforms is 7′-0″.

7.3.3 Platforms shall be placed 2′-6″ below the centerline of manways.

7.3.4 Maximum vertical distance between platforms (ladder length) is 30′-0″.

7.3.5 Minimum clearance around any platform obstruction is 1′-3″.

7.3.6 Cages are not required for ladders 8′-0″ long or less or ladders that end 20′-0″ or less above the high point of paving.

7.3.7 Platforms shall be provided for manways which have a centerline 15′-0″ or higher above high point of paving.

An example of how specifications are applied to piping drawings is represented in Figure 8-2.

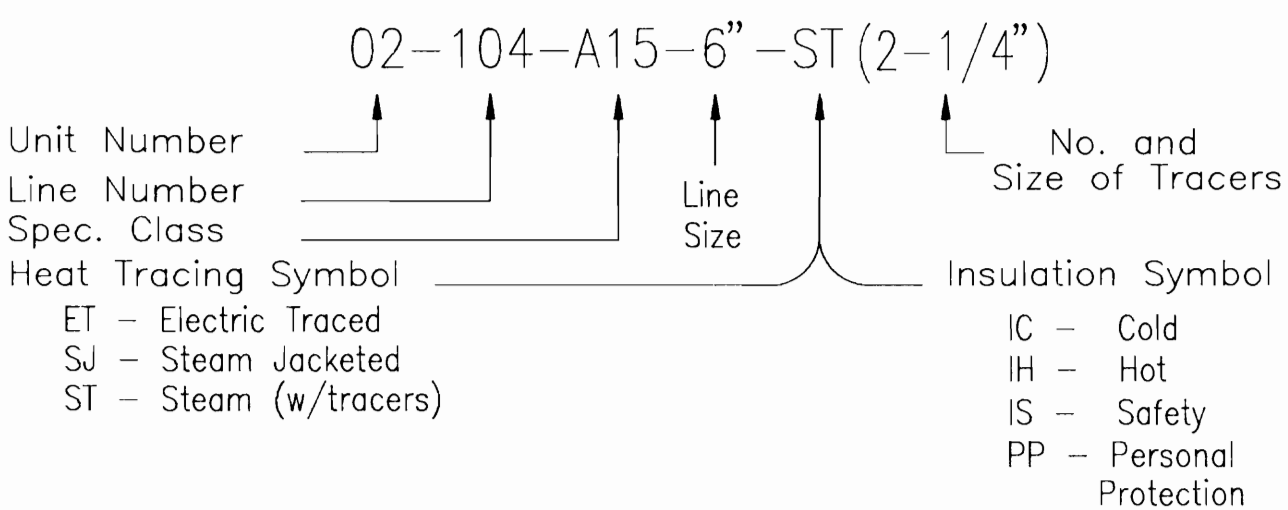

Figure 8-1. Line number.

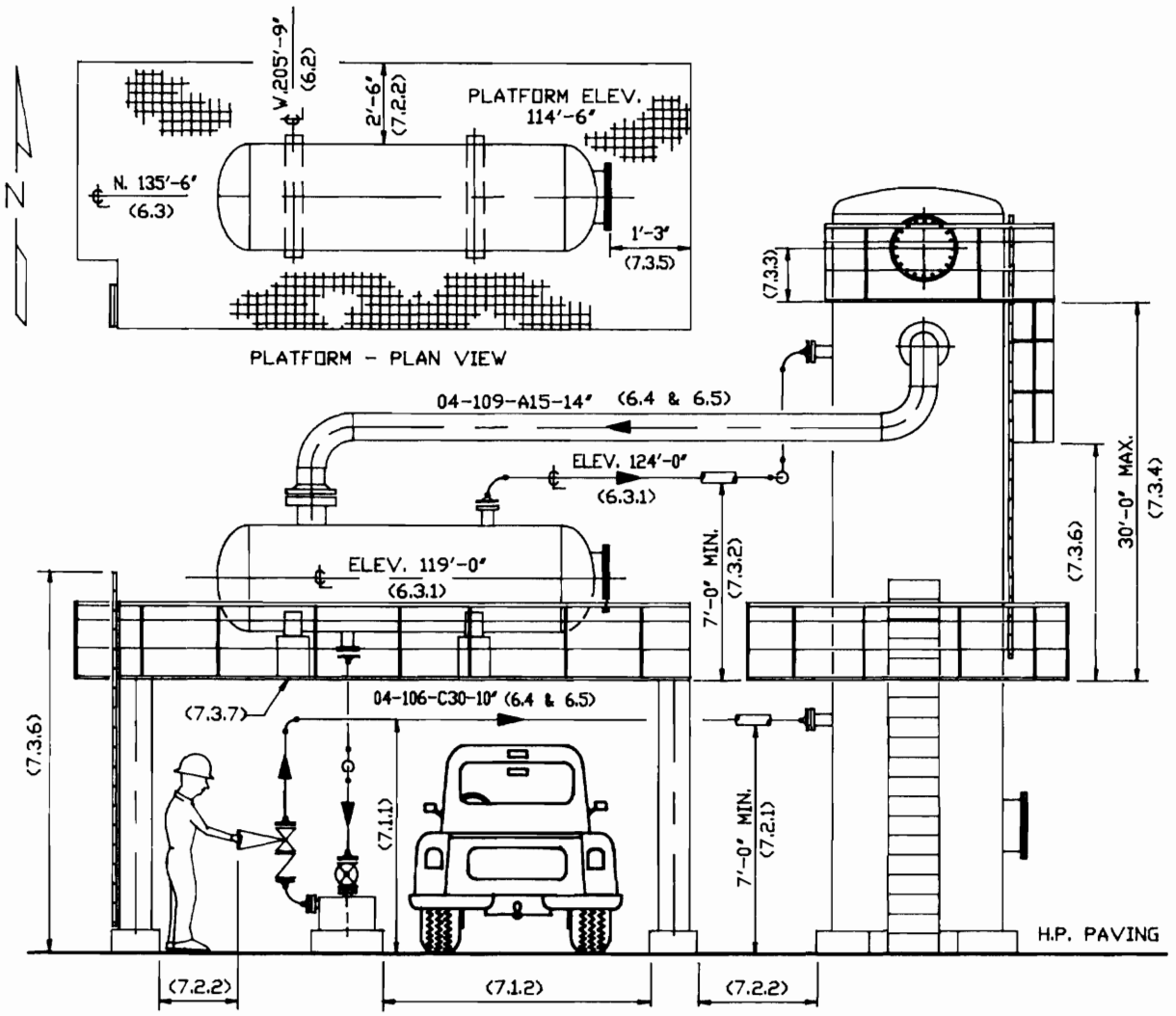

Figure 8-2. Application of specifications.

SPECIFICATION CLASSES

As extensive as specifications are, they should not be considered all encompassing. Specifications are divided into classes developed especially for particular services. Classes are categorized by the commodity within the pipe. They take into account whether the commodity is a gas or liquid, as well as design and operating temperatures, pressures, and corrosiveness. Figure 8-3 provides an index of classes. It includes the class designation, flange type and ratings, material, and service commodity type.

Specification classes use service parameters to establish flange pound ratings, pipe wall thickness, pressure and temperature limits, as well as the type of connections to be used, that is, screwed, socket-weld, butt-weld, etc.

Specification Classes

Class	Flange Size & Rating	Material	Commodity Service
A15	150# RFWN	C.S.	HYDROCARBON PROCESS
C30	300# RFWN	C.S.	HYDROCARBON PROCESS
IA15	150# RFWN	GALV.	INSTRUMENT AIR
PA15	150# RFWN	C.S.	PLANT AIR
S15	150# RFWN	C.S.	L.P. STEAM
W15	150# RFWN	C.S.	SERVICE WATER

Figure 8-3. Index of specification classes.

Specification classes are extremely detailed. They specify which manufacture to purchase valves from as well as the specific part model number to be used. Specs specify the material gaskets will be made of and whether branch connections are to be made using straight tees, reducing tees, or stub-ins. Specifications also stipulate corrosion allowance values. Corrosion allowance is the amount of surface material allowed to be eroded by the commodity within the pipe while permitting the pipe to remain usable for the particular service for which it is installed.

The examples of specification classes that follow are to be used throughout the projects in this text. Use them as a guide to answer specific questions about the design and drafting of a piping system. As with all specifications, they are to be used only with the project for which they are written and should not be considered typical for every project.

ABBREVIATIONS

As a piping facility becomes more complex, so do the piping drawings. Facilities such as multi-storied structures, specialized refining systems, and complex equipment arrangements compound the crowdedness of a drawing. To alleviate the crowded conditions, abbreviations should be used to reduce the space requirements of callouts and notes. The following is an alphabetical listing of many common abbreviations found on piping arrangement drawings, flow diagrams, or isometrics. A complete listing is almost impossible to assemble because engineering companies and their clients often have abbreviations that are particular to specific situations.

PIPING ABBREVIATIONS

A

A	Alarm
A	Anchor
ACCUM	Accumulator
AL	Aluminum
ANSI	American National Standards Institute
API	American Petroleum Institute
ASSY	Assembly
ASTM	American Society for Testing and Materials
ATMOS	Atmosphere
AUX	Auxiliary
AVG	Average
AZ	Azimuth

B

B	Beveled
BB	Bolted Bonnet
BBE	Bevel Both Ends
BBL	Barrel(s)
BC	Bolt Circle
BD	Blow Down
BE	Beveled End(s)
BF	Blind Flange
BL	Battery Limits
BLDG	Building
BLE	Bevel Large End
BOM	Bill of Materials
BOP	Bottom of Pipe
B&S	Bell and Spigot
BSE	Bevel Small End
BTU	British Thermal Unit
BV	Ball Valve
BW	Butt-weld

C

CB	Catch Basin
CHKV	Check Valve
Ch. Op.	Chain Operator
CI	Cast Iron
CL	Clearance
CO	Clean Out
COL	Column
COLS	Columns
CONC	Concentric
COND	Condensate
CONN	Connection
CORR	Corrosion
CPLG	Coupling
CS	Carbon Steel
	Cast Steel
	Cold Spring
CSC	Car Seal Closed
CSO	Car Seal Open
CTRLV	Control Valve
CWR	Cooling Water Return
CWS	Cooling Water Supply

D

DA	Directional Anchor
DF	Drain Funnel
DIA	Diameter
DIM	Dimension

PIPE A15 SPEC

POUND RATING	150 #	MATERIAL: CARBON STEEL

CORROSION ALLOWANCE	.05"	CONDITIONS: PSIG / °F	DESIGN	OPERATING
			200	175
			350	275

ITEM	SIZES IN INCHES	WEIGHT/ RATING	DESCRIPTION
Pipe	1/2"– 11/2"	EX. HVY.	SEAMLESS-PLAIN ENDS
	2"	STD. WT.	SEAMLESS-PLAIN ENDS
	3"–24"	STD. WT.	SEAMLESS-BEVELED ENDS
Fittings	1/2"– 2"	3000#	FORGED STEEL SOCKET WELD
	3"–24"	STD. WT.	FORGED STEEL BUTT WELD
Flanges	1/2"– 11/2"	150#	FS - RAISED FACE SOCKET WELD
	2"	150#	FS - RAISED FACE SOCKET WELD
	3"–24"	150#	FS - RAISED FACE WELD NECK

VALVES	SIZES IN INCHES	WEIGHT/ RATING	DESCRIPTION	Man./Model No.	END TYPES
Gate	1/2"– 2"	150–800	CAST STEEL	CRANE: Model No. 46XU	SCRD
	3"–24"	150	CAST STEEL	CRANE: Model No. 47XU	RF
Globe	1/2"– 2"	150–800	CAST STEEL	CRANE: Model No. 142X	SCRD
	3"–24"	150	CAST STEEL	CRANE: Model No. 143X	RF

GASKETS	Flexitallic style - 150#, 304SS: 1/8" thick

BRANCH CONNECT.	LINE SIZE	USE A TEE	150 #
	2"-BELOW	USE A TEE AND SWAGE ON SIZES 2" & SMALLER	
	3"-ABOVE	STUB-IN WHEN LESS THAN LINE SIZE	

PIPE C30 SPEC

POUND RATING 300 #			MATERIAL: CARBON STEEL	
CORROSION ALLOWANCE .05"	CONDITIONS: PSIG		DESIGN	OPERATING
			375	300
	°F		425	350

ITEM	SIZES IN INCHES	WEIGHT/ RATING	DESCRIPTION
Pipe	1/2"– 1 1/2"	EX. HVY.	SEAMLESS-PLAIN ENDS
	2"	STD. WT.	SEAMLESS-PLAIN ENDS
	3"–24"	STD. WT.	SEAMLESS-BEVELED ENDS
Fittings	1/2"– 2"	3000#	FORGED STEEL SOCKET WELD
	3"–24"	STD. WT.	FORGED STEEL BUTT WELD
Flanges	1/2"– 1 1/2"	300#	FS - RAISED FACE SOCKET WELD
	2"	300#	FS - RAISED FACE SOCKET WELD
	3"–24"	300#	FS - RAISED FACE WELD NECK

VALVES	SIZES IN INCHES	WEIGHT/ RATING	DESCRIPTION	Man./Model No.	END TYPES
Gate	1/2"– 2"	300	CAST STEEL - WEDGE	CRANE: Model No. 32XU	SCRD
	3"–24"	300	CAST STEEL - WEDGE	CRANE: Model No. 33X	RF
Globe	1/2"– 2"	300	BRONZE - PLUG TYPE	CRANE: Model No. 382P	SCRD
	3"–24"	300	CAST STEEL	CRANE: Model No. 151X	RF

GASKETS	Flexitallic style - 300#, 304SS: 1/8" thick		
BRANCH CONNECT.	LINE SIZE	USE A TEE	300 #
	2"-BELOW	USE A TEE AND SWAGE ON SIZES 2" & SMALLER	
	3"-ABOVE	STUB-IN WHEN LESS THAN LINE SIZE	

DISCH	Discharge
DR	Drain
DW	Dummy Weld
DWG	Drawing
DRWN	Drawn

E

E	East
ECC	Eccentric
EL	Elevation
ELL	Elbow
ELEV	Elevation
EQUIP	Equipment
ERW	Electric Resistance Welded
EXCH	Exchanger
EXIST	Existing

F

FA	Flow Alarm
FBO	Furnished By Others
FDN	Foundation
FE	Flow Element
F/F	Face-to-Face
FF	Flat Face
	Full Face
FI	Flow Indicator
FIC	Flow Indicating Controller
FIG	Figure
FLR	Floor
FLD FAB	Field Fabricate
FL	Flange
FOB	Flat on Bottom
FOT	Flat on Top
FR	Flow Recorder
FRC	Flow Recording Controller
FS	Field Support
	Forged Steel
FT	Foot or Feet
FW	Field Weld

G

G	Gauge or gage
GAL	Gallon(s)
GALV	Galvanized
GPH	Gallons Per Hour
GPM	Gallons Per Minute
GR	Grade
GaV	Gate Valve
GIV	Globe Valve

H

HCV	Hand Control Valve
HDR	Header
HIC	Hand Indicating Controller
HLL	High Liquid Level
HOR	Horizontal
HP	High Pressure
HPFS	High Point Finished Surface
HPP	High Point Paving
HR	Hanger Rod
	Hour
HTR	Heater
HVAC	Heating, Ventilating, and Air Conditioning
HVY	Heavy
HYD	Hydraulic

I

IA	Instrument Air
	Insulation (anti sweat)
IC	Insulation (cold)
ID	Inside Diameter
IDD	Inside Depth of Dish
IET	Electric Trace
IGT	Glycol Trace
IH	Insulation (heat conservation)
IN	Inch(es)
INS	Insulate or Insulation
INST	Instrument(ation)
INV	Invert Elevation
IPS	Iron Pipe Size
IS	Insulation Safety
ISA	Instrumentation Society of America
ISO	International Organization for Standardization
	Isometric
IST	Steam Trace

J

JCT	Junction
JS	Jack Screw
JT	Joint

L

L	Level
LA	Level Alarm
LAH	Level Alarm-High
LAL	Level Alarm-Low

LBS Pounds
LC Level Controller
Lock Closed
LG Level Gauge
Level Glass
LI Level Indicator
LIC Level Indicating Controller
LLL Low Liquid Level
LN Line
LO Lock Open
LP Low Pressure
LPG Liquefied Petroleum Gas
LPT Low Point
LR Level Recorder
Long Radius
LRC Level Recording Controller
LS Level Switch

M

mm millimeter
M Meter
M&F Male and Female
MATL Material
MAX Maximum
MECH Mechanical
MFG Manufacturing
MFR Manufacturer
MI Malleable Iron
MIN Minimum
Minute
MISC Miscellaneous
MK Piece Mark
MW Manway
Miter weld

N

N North
NC Normally Closed
NEC National Electric Code
NEG Negative
NIP Nipple
NLL Normal Liquid Level
NO Normally Open
Number
NOM Nominal
NOZZ Nozzle
NPS Nominal Pipe Size
NPSH Net Positive Suction Head
NPT National Pipe Thread
NTS Not to Scale

O

OAL Overall Length
OD Outside Diameter
OH Open Hearth
OPP Opposite
OS&Y Outside Screw and Yoke
OVHD Overhead
OWS Oily Water Sewer

P

PA Pipe Anchor
Pressure Alarm
PC Pressure Controller
PCV Pressure Control Valve
PdRC Pressure Differential Recording Controller
PE Plain End
PI Point of Intersection
Pressure Indicator
PIC Pressure Indicating Controller
P&ID Piping and Instrument Diagram
PLE Plain Large End
PO Pump Out
POE Plain One End
POS Positive
PP Personnel Protection
PR Pressure Recorder
PRC Pressure Recording Controller
PS Pipe Support
PSE Plain Small End
PSI Pounds per Square Inch
PSIA Pounds per Square Inch absolute
PSIG Pounds per Square Inch Gage
PSV Pressure Safety Valve
PT Point

Q

QTY Quantity
QUAD Quadrant
Quadruple

R

R Radius
REC'D Received
RED Reducer

REF	Reference
REINF	Reinforce
REQ'D	Required
REV	Reverse
	Revision
RF	Raised Face
RJ	Ring Type Joint
RPM	Rotations Per Minute
RS	Rising Stem
RTJ	Ring Type Joint

S

S	South
SC	Sample Connection
SCH	Schedule
SCRD	Screwed
SECT	Section
SH (SHT)	Sheet
SMLS	Seamless
SO	Slip On
	Steam Out
SOL	Sockolet
SP	Set Point
SP GR	Specific Gravity
SPEC	Specification
SQ	Square
SR	Short Radius
STD	Standard
STL	Steel
STM	Steam
SUCT	Suction
SUPT	Support
SW	Socket-weld
SWG	Swage
SWP	Standard Working Pressure
SYS	System

T

T	Steam Trap
TA	Temperature Alarm
Tan	Tangent
TBE	Thread Both Ends
TC	Temperature Controller
TCV	Temperature Control Valve
TE	Threaded End
TEMP	Temperature
T&C	Thread and Coupled
T&G	Tongue and Groove
THRD	Thread
TI	Temperature Indicator
TIC	Temperature Indicating Controller
TLE	Thread Large End
TOC	Top of Concrete
TOG	Top of Grout
TOL	Threadolet
TOS	Top of Steel
TR	Temperature Recorder
TRC	Temperature Recording Controller
TSE	Thread Small End
T/T	Tangent to Tangent
TW	Temperature Well
	Thermowell
TYP	Typical

U

UA	Utility Air
US	Utility Station

V

VA	Valve
	Vent to Atmosphere
VB	Vortex Breaker
VC	Vitrified Clay
VERT	Vertical
VF	Vent to Flare
VOL	Volume
VS	Vent to Stack

W

w/	with
W	West
WB	Welded Bonnet
WE	Weld End
WLD	Weld
WN	Weld Neck
WOG	Water, Oil, Gas
WOL	Weldolet
WT	Weight

X

XH	Extra Heavy
XS	Extra Strong
XXH	Double Extra Heavy
XXS	Double Extra Strong

CHAPTER 8 REVIEW QUIZ

1. Explain the difference between codes and specifications.

_____

_____

Using information found in the sample piping specifications, answer the following questions.

2. Dimensions are provided on drawings to the nearest_____ of an inch.
3. Piping drawings are drawn to which scale?

_____

4. What is the minimum headroom clearance of a secondary roadway?

_____

5. What is the minimum headroom clearance over a walkway?

_____

6. What is the minimum horizontal clearance of a walkway?

_____

7. What is the minimum width of a platform?

_____

8. What is maximum vertical distance between platforms?

_____

9. Cages are not required on ladders_____ feet long or less.

_____

10. What is the purpose of specification classes?

_____

_____

Equipment Layout

PLANT COORDINATE SYSTEMS

Plot plans, foundation location drawings, and equipment location drawings are developed using the *plant coordinate system.* Universally recognized throughout the piping industry, the plant coordinate system uses intersecting grid lines, similar to the Cartesian coordinate system, to locate buildings, structures, foundations, equipment, and piping configurations. These intersecting grid lines, which originate from a designated control point, are drawn parallel to the north/south and east/west axes.

The control point, more commonly known as a *bench mark*, is a permanent marker erected in a remote area of the piping facility. It is often located so it will not be accidentally damaged or destroyed. The control point is used as the origin from which the intersecting north/south and east/west lines are labeled as coordinates using numerical values. The control point, therefore, becomes the primary reference point for the entire facility. By defining the control point as 0′-0″, 0′-0″ and using a north arrow to establish orientation, the numerical values assigned to the coordinates allow for exact positioning of all facility components. Coordinates indicate the measurement from the control point to the particular structure, foundation, or piece of equipment that the coordinate locates.

North arrows are typically pointed up or to the right on a drawing and help create directional bearing in the facility. Lines above, or north of, the 0′-0″, 0′-0″ control point are assigned north coordinates and are labeled to indicate their distance from the control point, for example, N. 5′-0″. Lines to the right of 0′-0″, 0′-0″ are assigned east coordinates, for example, E. 5′-0″. Coordinates to the south and west of the control point will have S. or W. prefixes, respectively. See Figure 9-1 for an example of the plant coordinate system.

The format used to identify plant coordinates will vary with each design project. Some projects use feet and inch designations while others may use decimals of a foot or millimeters. No matter the format, all coordinates are preceded by the letters N, S, E, or W. The project in this text will use feet and inches with the metric equivalent shown beneath. Location dimensions used on piping arrangement drawings are placed to reference a known coordinate, usually the center line of a column, foundation, or piece of equipment.

A control point is also used to establish the elevation of the piping facility. Elevation is the vertical distance an object measures above sea level, such as the height of a mountain. Piping facilities use elevations to designate the height an object measures from grade. Grade is a piping term that is synonymous with ground. Rather than using numbers based on the actual height above sea level, most facilities use an arbitrary elevation of 100′-0″ as a matter of convenience. Facilities located within high-rise structures may use elevations based on the height of the various floors within the structure. In all petro-chemical facilities, pipes are installed both above grade and below grade. The use of 100′-0″ as a point of reference prevents the use of negative numbers when dimensioning lines below grade.

Few actual dimensions are provided on piping section or elevation drawings. However, numerous callouts are placed on drawings to convey elevation information to the reader. Some of the callouts and corresponding terms are shown below.

See Figure 9-2 for examples of the plant elevation system.

Piping Terminology	Piping Callout
grade elevation	GRADE EL.100′-0″
high point of paving	H.P. PAVING 100′-0″
center line elevation	℄ EL. 102′-0″
top of concrete	T.O.C. EL.101′-0″
top of steel	T.O.S. EL. 112′-0″
bottom of pipe	B.O.P. EL. 112′-0″
face of flange	F.O.F. EL. 105′-0″
top of platform	T.O. PLAT. EL. 137′-6″

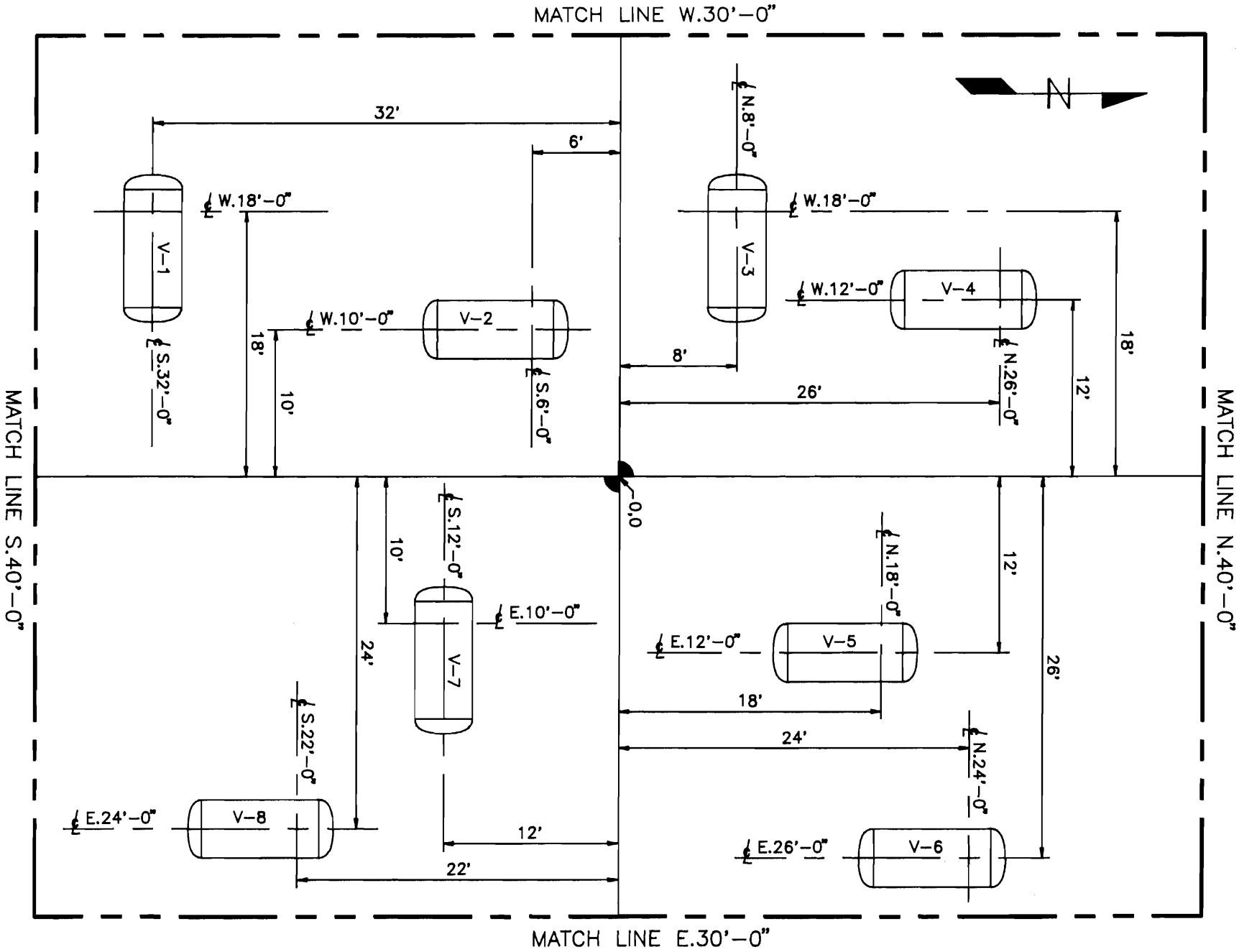

Figure 9-1. Plant coordinate system.

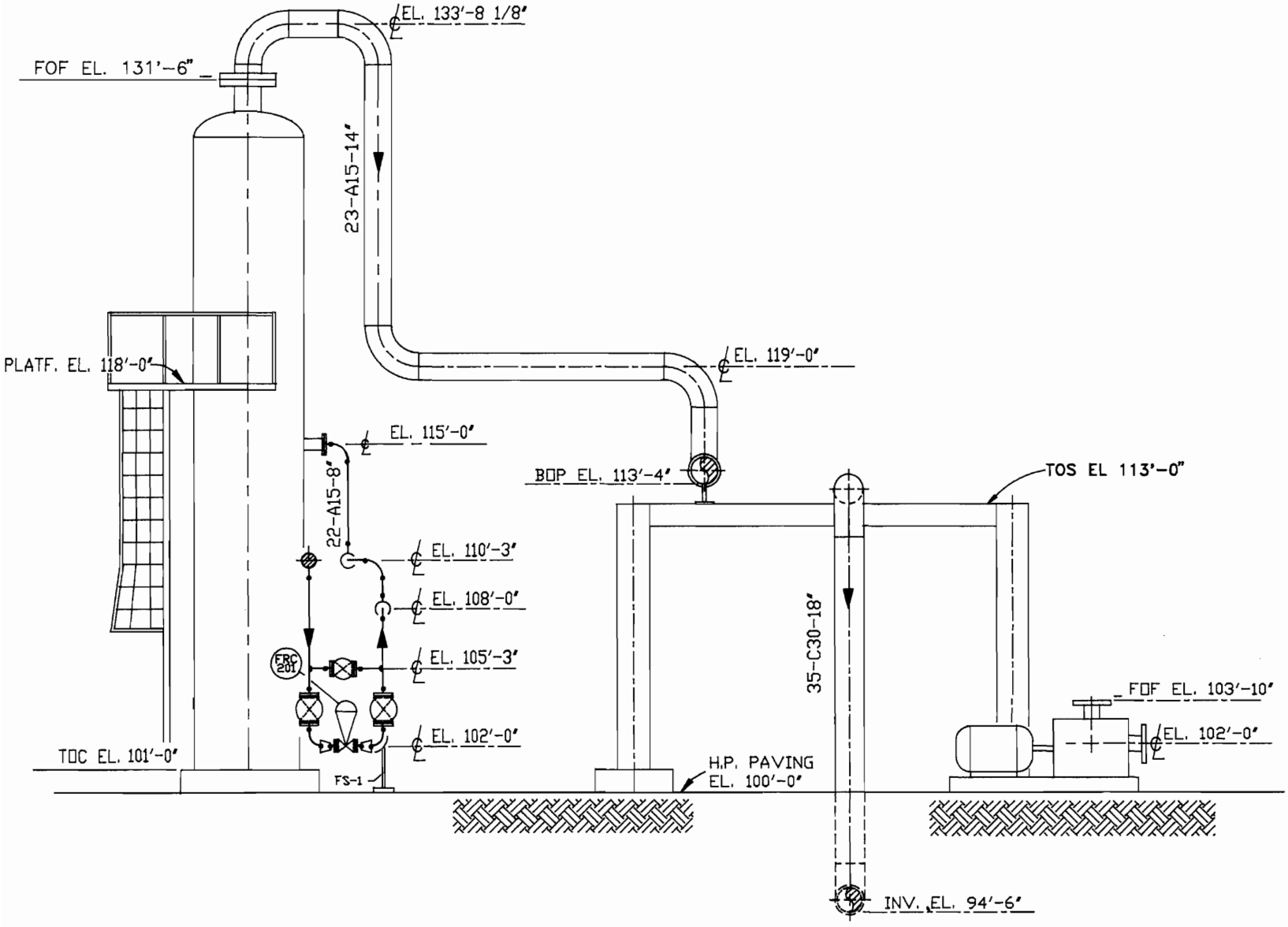

Figure 9-2. Plant elevation system.

The repeated use of coordinates and elevations makes it imperative that correct numbers be used to calculate accurate dimensions. To avoid inadvertent mixing of coordinate and elevation values, follow this simple guideline: Use only coordinates to calculate horizontal dimensions and use only elevations to calculate vertical dimensions. By adding or subtracting coordinates, horizontal distances between supports, foundations, and equipment can be determined. Knowing when to add and when to subtract can be confusing, however. The basic rule to remember when calculating horizontal distances is: Subtract like coordinates and add unlike coordinates. This basic rule is illustrated in Figure 9-3.

Calculating vertical dimensions is somewhat easier. Simply subtract the lower elevation from the higher elevation to determine the distance between the two. However, you must be certain that elevations of the same type are used. For example, always use two centerline elevations, not one centerline and one bottom of pipe. It is best to convert B.O.P. elevation callouts to centerline elevations before subtracting. This is accomplished by adding one half the actual OD of the pipe to the B.O.P. elevation. Also be aware that lines installed below grade are labeled using *invert* elevations. Invert elevations identify the inside bottom of pipe elevation, that is, the distance from the bottom inside of the pipe to the ground above it. Figure 9-4 illustrates the use of elevations to calculate vertical dimensions.

SITE PLANS

The civil/topographic drafting department of a company prepares the site plans for the piping facility. Site plans are overhead views drawn to show the overall facility site and adjacent areas that may include roadways, railways, harbors, ship channels, and aircraft landing zones. Drawings of this size do not show significant detail. Detailed areas of the facility are usually denoted by rectangular outlines with notes or titles describing the area's purpose. Mechanical equipment within the facility is typically too small to be represented on a site plan. Therefore the complete facility is usually divided into smaller areas called *units*. Each unit can then be drawn separately on drawings called *unit plot plans*.

UNIT PLOT PLAN

Unit plot plans are generally defined by imaginary lines called *battery limits*. Battery limits are used to establish a unit's boundaries. The unit plot plan is usually drawn to one of the following scales: 1″ = 10′, 1″ = 20′, or 1″ = 30′.

Unit plot plans show the location of all the buildings, equipment, pipe racks, and other items of importance in the unit. True north and plant north are also shown. The purpose of this drawing is not to show detail, but rather, the arrangement of various components to be erected in the unit.

The piping group is typically responsible for the development of the unit plot plan. Unit plot plans are developed using the mechanical flow diagram, client specifications, codes, and input from the client's engineers, and the plant manager who will ultimately oversee the operation of the facility. Figure 9-5 shows an example of a unit plot plan.

EQUIPMENT LOCATION DRAWING

In order to arrange and adequately space equipment, the piping group will use the approved plot plan to assign coordinates to mechanical equipment, pipe supports, and control rooms. Keep in mind there will be plant operators and maintenance personnel in the facility 24 hours a day. Adequate arrangement and spacing of components within the facility depend on a number of factors, including piping codes, space availability, worker accessibility as well as client preferences. All pieces of mechanical equipment to be installed within the facility are positioned using two intersecting coordinate lines, one north/south and one east/west. These intersecting coordinates define the precise position of the equipment by locating the centerline of its foundation. When locating equipment such as exchangers and reboilers that have a foundational support on each end, at least one of the equipment's supporting foundations must be located with coordinates. By using the plant coordinate system, it is impossible for any other component in the facility to have the same pair of intersecting coordinates. Figure 9-6 shows an example of an equipment location drawing.

FOUNDATION LOCATION DRAWING

The structural drafting department uses information provided on the equipment location drawing to show the position of foundations for equipment, structural support, and control buildings. On foundation location drawings, foundations that are to be built above grade are drawn as solid lines and spread footings. The portion of the foundation that lies below grade is shown as hidden lines.

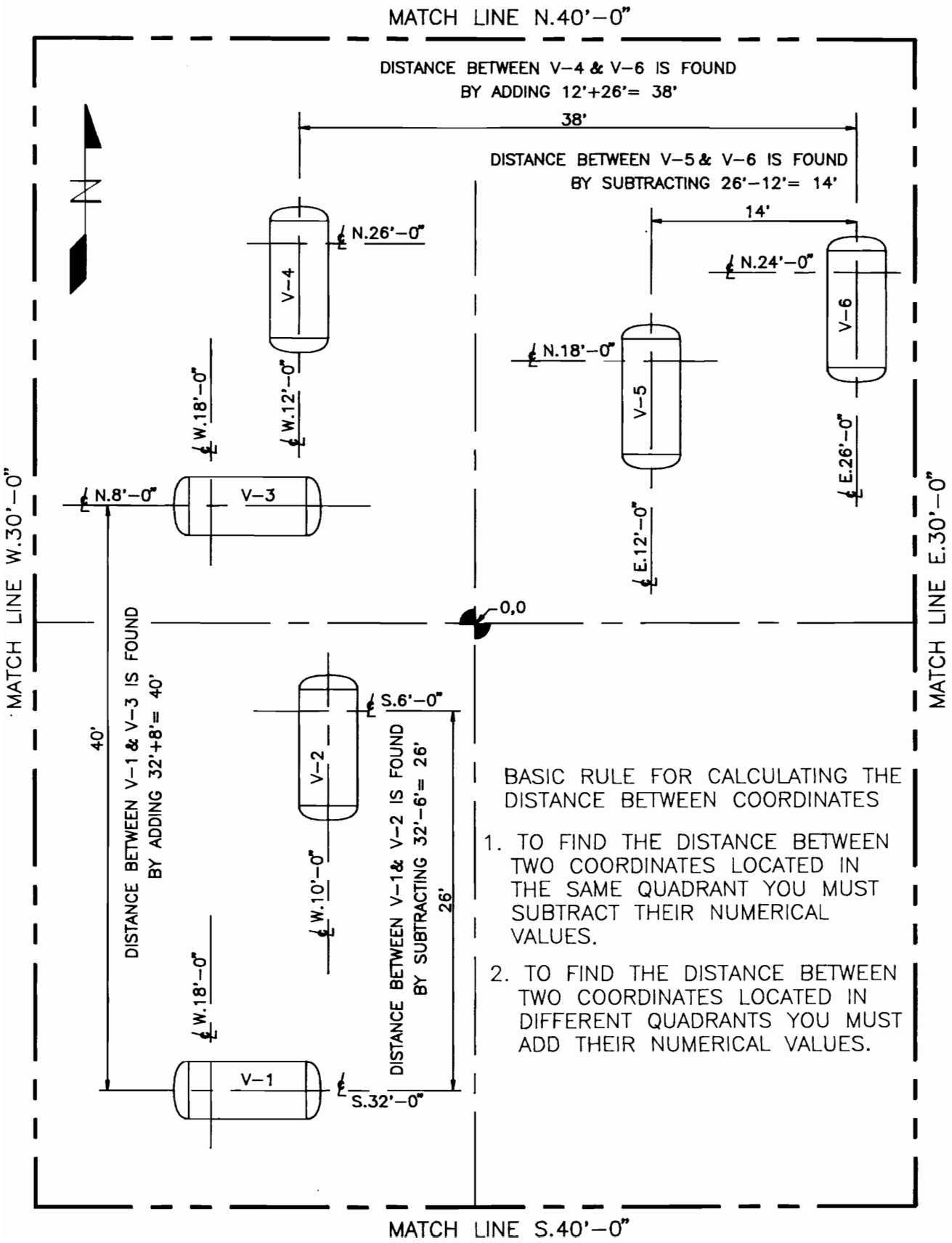

Figure 9-3. Coordinates.

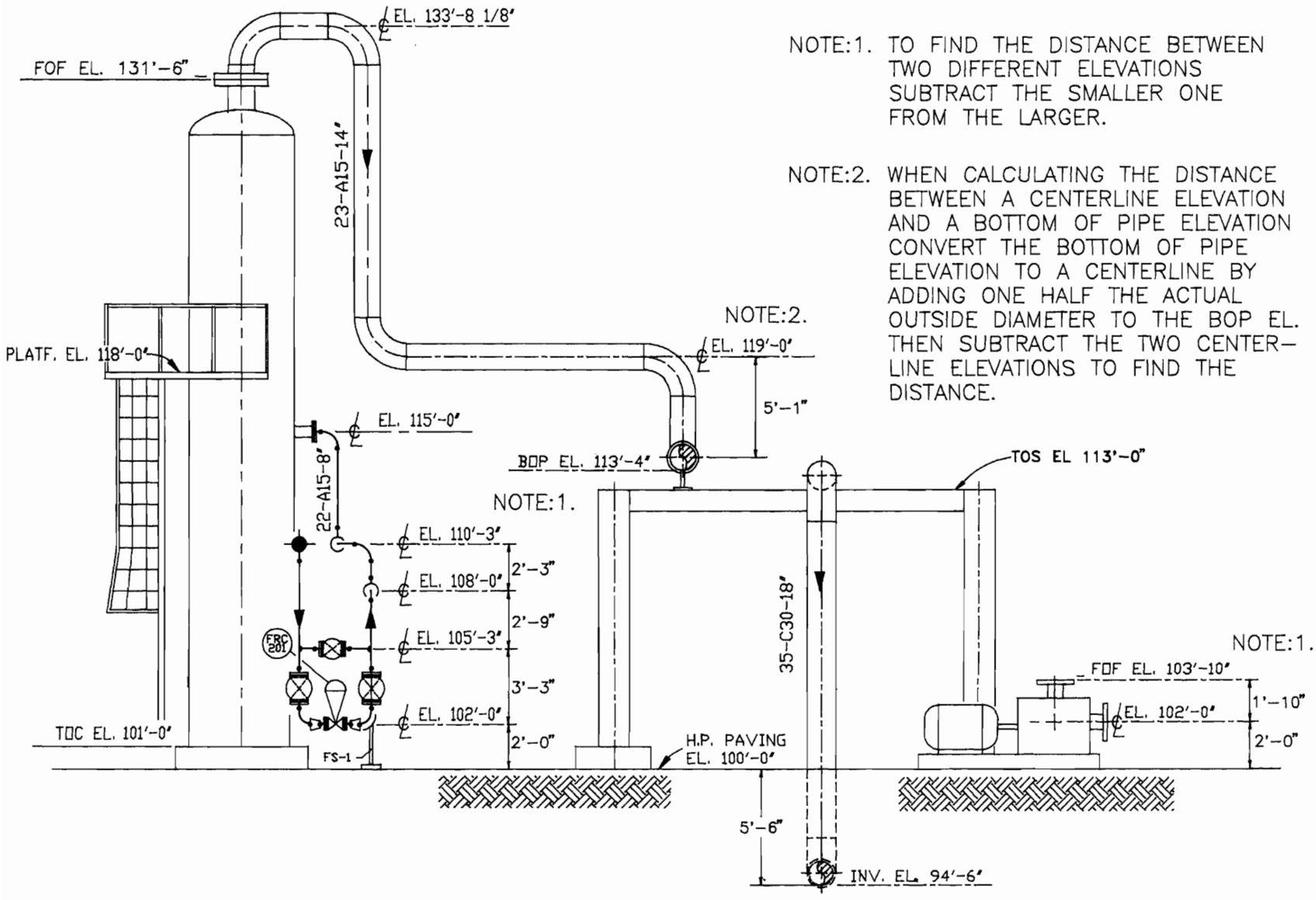

Figure 9-4. Elevations.

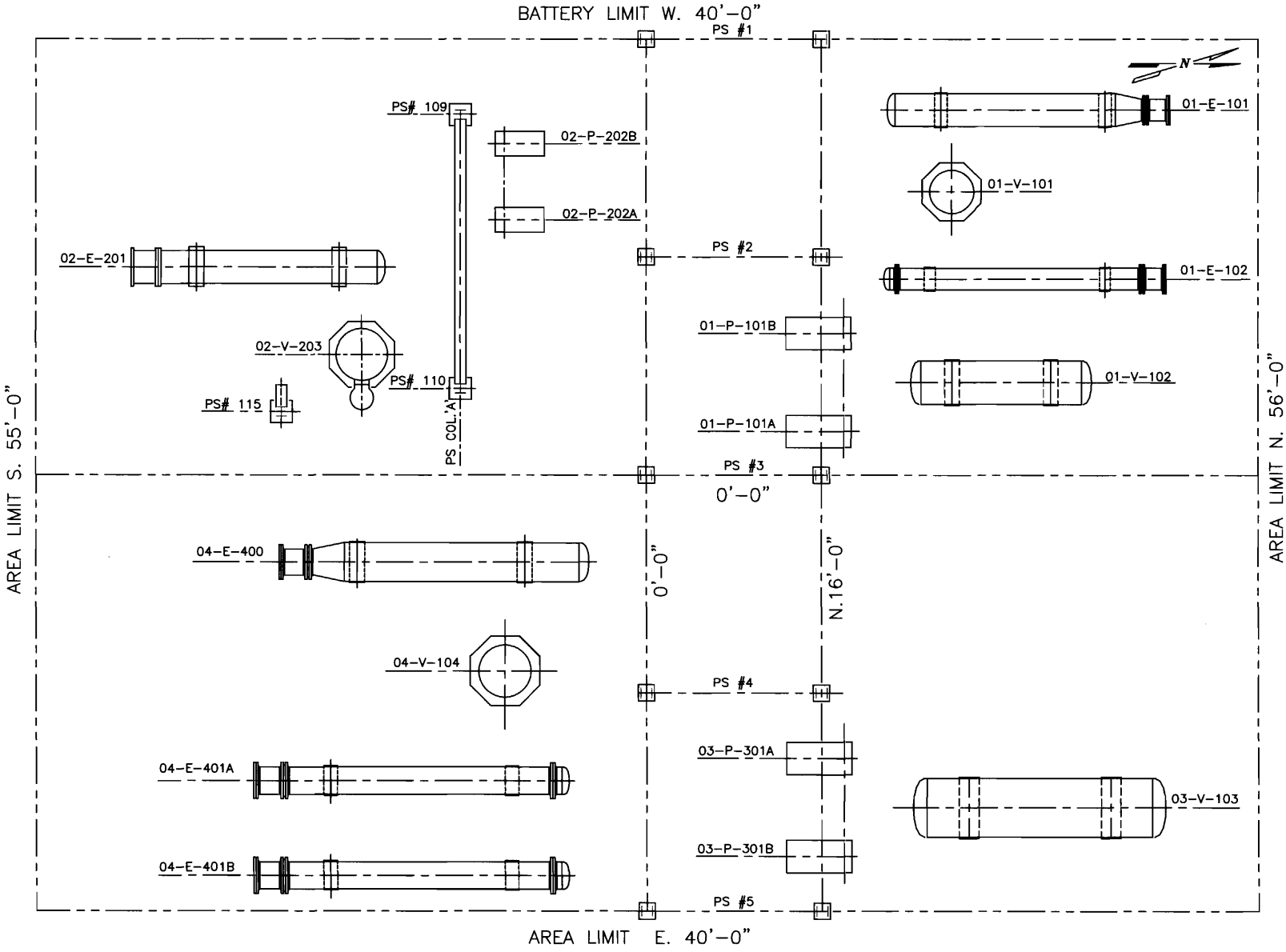

Figure 9-5. Unit plot plan.

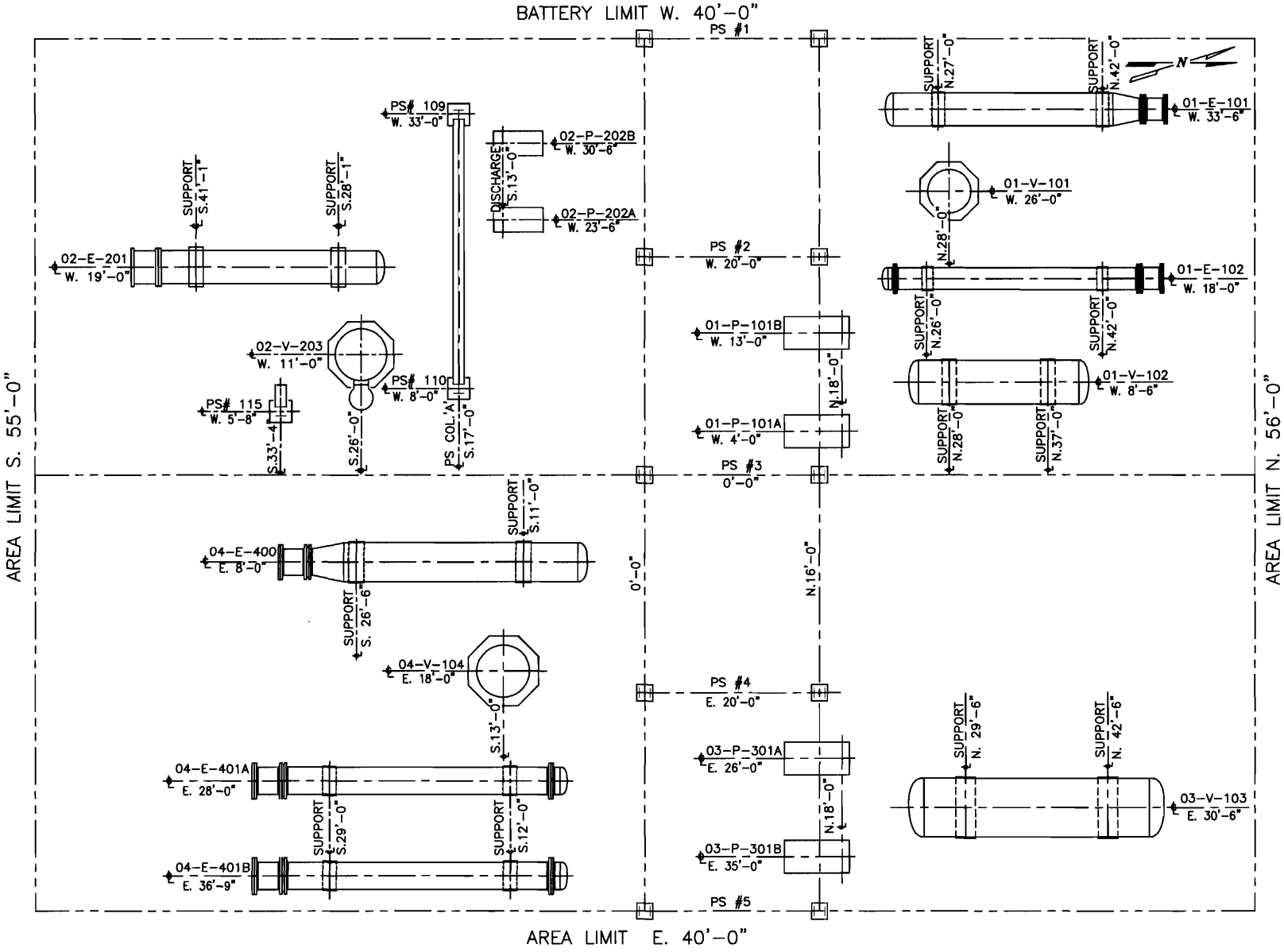

Figure 9-6. Equipment location drawing.

PIPING DRAWING INDEX

The piping drawing index is developed from the plot plan. This drawing divides the plot plan into smaller drawing areas, using *match lines*. Match lines are lines drawn and labeled that allow the smaller drawing areas to be pieced together to form the larger plot plan, similar to a puzzle. Larger areas are divided in such a way as to keep related pieces of equipment on the same drawing if possible. These drawing areas are given a drawing number for easy identification and then assigned to various designers on the project. During the design phase, it is crucial that designers interface with those working on adjacent drawing areas. The position, size, and pound rating of lines entering or leaving an area and continuing into an adjacent area must be properly noted and located on all related drawings. Figure 9-7 shows an example of the piping drawing index.

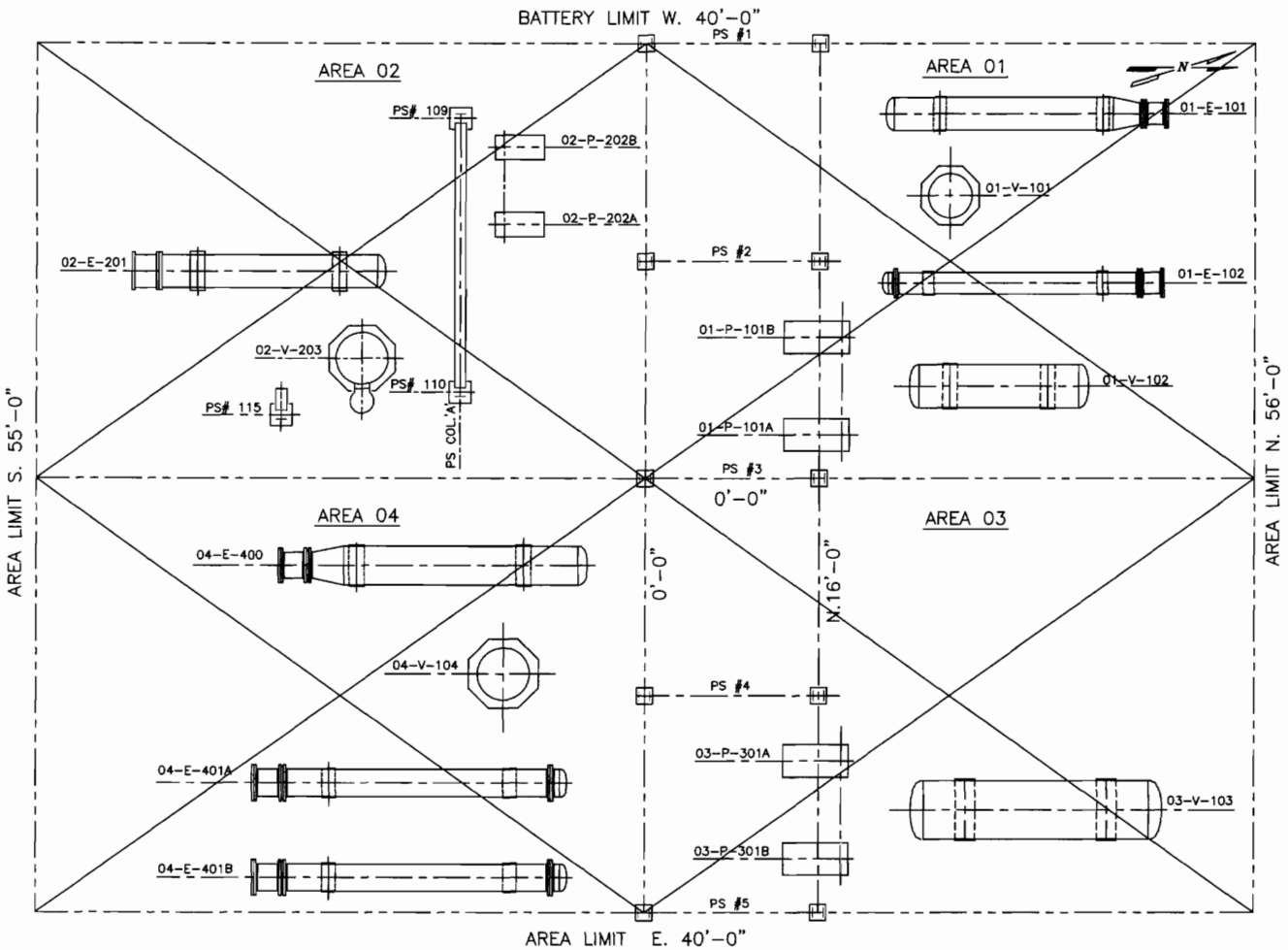

Figure 9-7. Piping drawing index.

CHAPTER 9 REVIEW QUIZ

1. Define plant coordinate system.

_____

_____

2. Name the three units of measurement by which coordinates can be labeled.

_____

3. What is the typical arbitrary value for the elevation of grade?

_____

_____

4. Define the following terms.

H.P. Paving

_____

_____

T.O.C. EL.

_____

T.O.S. EL.

_____

_____

B.O.P. EL.

_____

_____

F.O.F. EL.

_____

_____

5. Use only coordinates to determine _____ dimensions.
6. Use only elevations to determine _____ dimensions.
7. Define battery limits.

_____

8. Name three factors that influence the arrangement and spacing of equipment.

_____

9. How are above-grade foundations represented on a foundation location drawing?

_____

10. What is a match line?

_____

Piping Arrangement Drawings, Sections, and Elevations

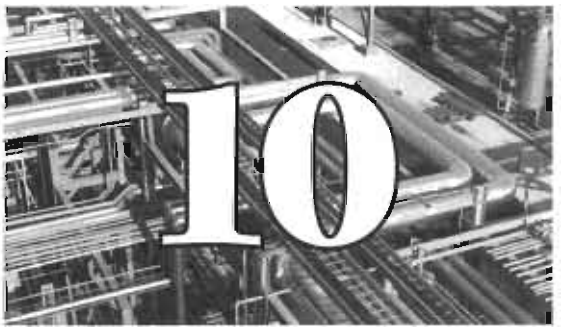

ARRANGEMENT DRAWINGS

The arrangement drawing is the most significant drawing developed by a piping designer. This plan view drawing is a major source of information used in the fabrication and erection of the piping facility. Information on the arrangement drawing aids in the development of the piping model and isometric drawings.

The piping arrangement drawing evolves from the foundation location and equipment location drawings. It shows all mechanical equipment and vessels in the unit and the pipes connecting them, including manholes, ladders, platforms, and davits. It identifies all structural supports such as pipe racks, equipment structures, columns, braces and any fireproofing they may have. Once locations for foundations and equipment have been established, piping configurations are added to the drawing with the aid of symbols that represent fittings, flanges, and valves.

Written information placed on the arrangement drawing includes equipment coordinates, identification numbers, elevation callouts, line numbers, flow arrows, and dimensions establishing pipe locations. Instrumentation symbols are included to indicate type, position, and orientation for accessibility by plant personnel. Ladders and platforms are also shown on equipment and structures that have them. A nozzle schedule is included that contains detailed information about all piping and instrument connections for every piece of equipment. Information such as nozzle number, size and pound rating, orientation, elevation, and projection is also included. With so much required information on a drawing, it is easy to understand why the piping arrangement drawing must be neat, accurate, and legible.

RESPONSIBILITIES OF THE PIPING DESIGNER

Only after many years of experience does the drafter become a piping designer. The time invested in learning company specifications, layout procedures, and equipment requirements makes the designer a valuable employee.

As the arrangement drawing is being developed, a piping designer should consider the following:

How can the drawing be simplified? How will construction, repairs, and routine maintenance be performed in this unit? Has enough room been provided for access between equipment? Foremost on a designer's mind should be the safety and protection of plant operators and maintenance personnel.

INFORMATION SOURCES FOR PIPING ARRANGEMENT DRAWINGS

A piping designer must assemble the various reference drawings and documents needed to lay out the piping arrangement drawing. These may include:

- mechanical flow diagram
- plot plan
- foundation or equipment location plan
- piping index drawing
- equipment (vendor) drawings and foundation drawings
- piping specifications
- pipe line list
- list of special requirements, if any, for the project

LAYOUT PROCEDURES

To develop a piping arrangement drawing, the designer must be familiar with company and client job specifications and requirements of the current project. Many different layout and design techniques can be used depending on client requirements, company policy, budget limitations, manpower, and available computer software.

Piping arrangement drawings are quite complex and congested. Therefore a systematic layout procedure is recommended to ensure all necessary items are included. The following are the recommended procedures for layout of piping arrangement drawings.

1. Define proposed area outline or drawing match lines.
2. Fill in drawing number and title block information.
3. Place a north arrow in upper right-hand corner of the drawing.
4. Locate foundations for buildings, pipe rack columns, and mechanical equipment from the coordinates used to develop the foundation location drawing and dimensions provided on the equipment foundation drawing.
5. Draw equipment foundations.
6. Lay out equipment.

NOTE :

- Show only enough detail on equipment outlines to provide a generalized description.
- Represent equipment centerlines, outlines, and foundations with thin dark lines.
- Show all piping and instrumentation connections (nozzles, couplings, etc.) on equipment.

7. Prepare a study drawing of each individual piping configuration in the facility. This procedure will allow the designer to explore all requirements necessary for design, operation, and maintenance prior to the final layout.
8. Lay out the piping system as shown on the study drawing. Include instrumentation connections on the piping configuration. Note that every piping facility has different process, mechanical, and instrumentation requirements. It would be extremely difficult to establish set rules and procedures for methods of piping development. Each line on the layout is, in itself, a special design problem and must be dealt with accordingly.
9. Add platforms, ladders and cages, pipe guides, anchors, supports, and hangers as required.
10. Include line numbers, codes, specs, specialty item numbers, and callouts.
11. Place locating dimensions for piping.
12. Label coordinates for equipment, pipe supports, etc., if required for job.
13. Add instrument balloons and callouts.
14. Include nozzle schedules and notes as required.
15. Complete drawing. Add match line, area limit, and battery limit callouts, reference details, and section or elevation cutting plane symbols.
16. Print/plot the completed drawing and check your work.
17. Correct any mistakes you find before releasing the drawing to your instructor or supervisor.

PIPING ARRANGEMENT DRAWING LAYOUT

This section provides a detailed explanation of the procedures to lay out the piping arrangement drawing shown in Figure 10-1. These procedures will simulate those undertaken on any design project by an actual engineering company. To simplify the layout procedures and consolidate the reference drawings and related information, a copy of the mechanical flow diagram, foundation drawing, equipment foundation drawings, equipment vendor drawings, and the piping specification tables is provided in this chapter.

The following procedures present both manual and **AutoCAD** methods for developing piping arrangement drawings. Note that manual drawings should be drawn to ⅜″ = 1′-0″ scale and CAD drawings are drawn full size and plotted to ⅜″ = 1′-0″ (.03125″) scale.

Procedure 1-3: Drawing setup. Locating area and unit boundaries, title block, and north arrow

References Drawing: Foundation location plan and company drawing standards

Manual. On a "C" size (18″ × 24″) sheet of tracing vellum, lightly lay out drawing borders measuring ½″ inward from the edges of the vellum,

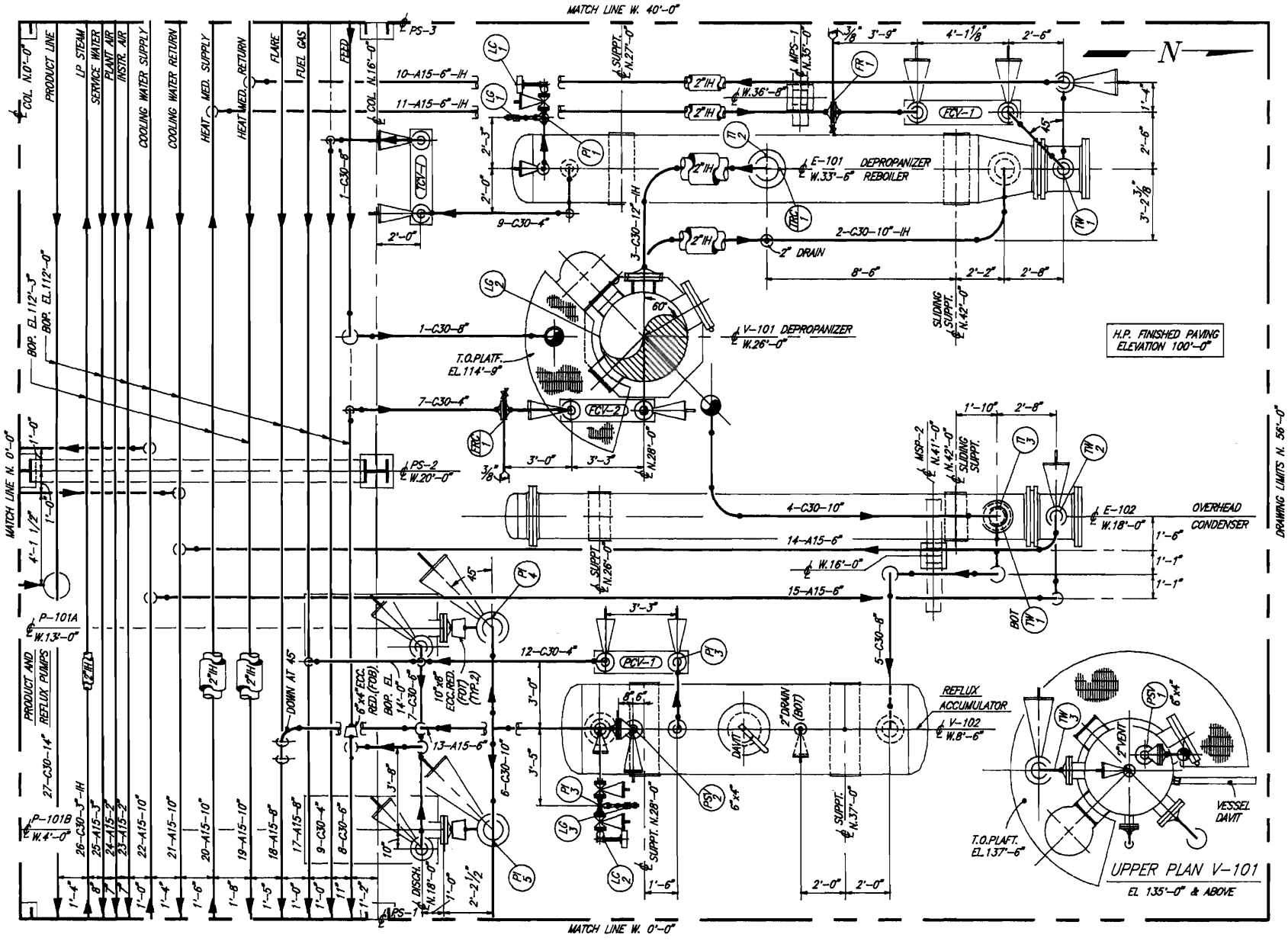

Figure 10-1. Piping arrangement drawing—single line.

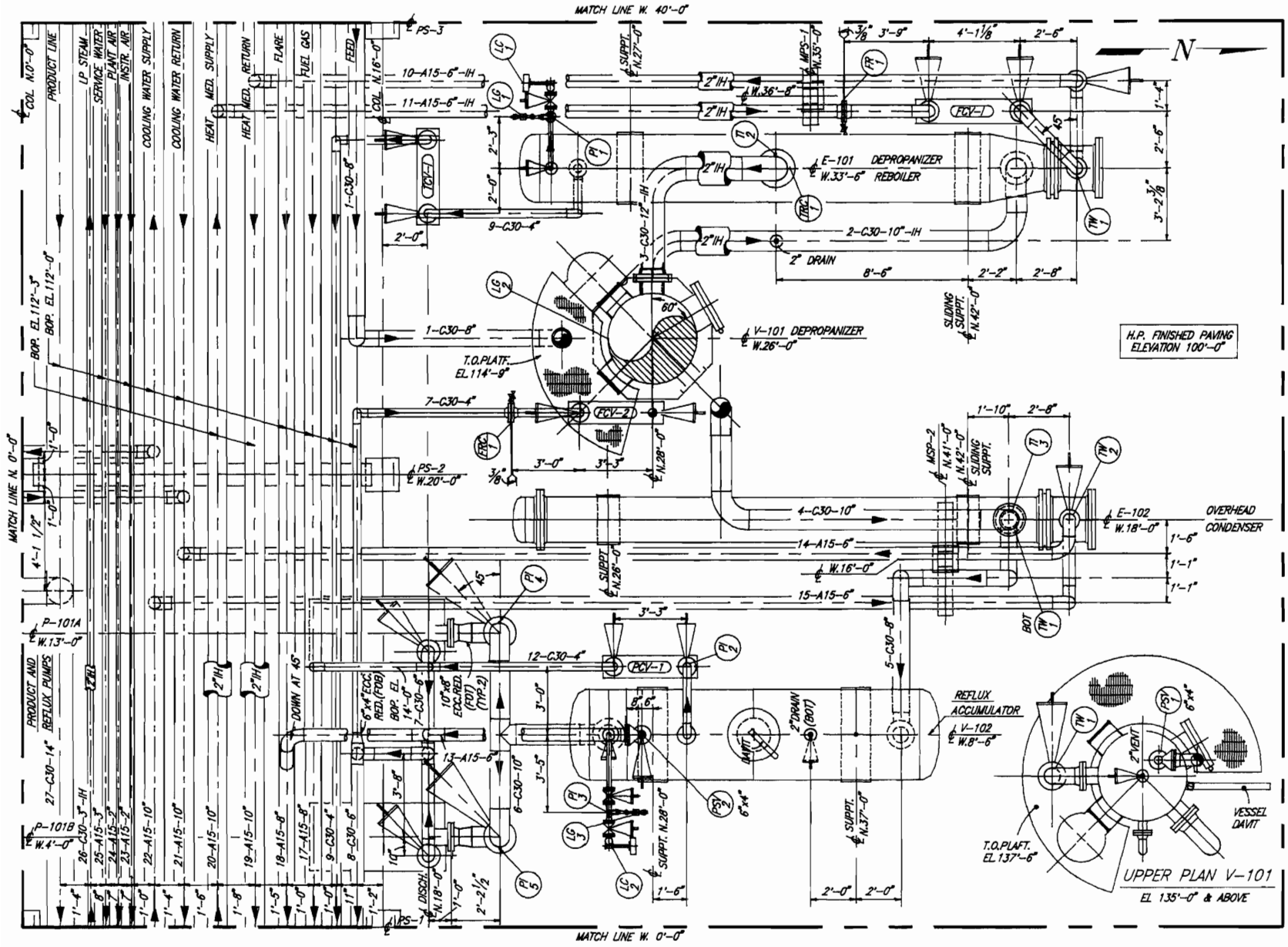

Figure 10-2. Piping arrangement drawing—double line.

including title block if required. Find the center of the drawing area by drawing diagonal lines from the opposite corners of the borders. The intersection of the two diagonal lines will form the center of the drawing area. Determine the width and depth of the unit's boundaries by subtracting the smaller match line coordinates from the larger match line coordinates for both the north/south and east/west match lines respectively. Divide the width and depth measurements equally on each side of the drawing's centerpoint. Lightly layout the unit's match lines with construction lines using the ⅜″ = 1′-0″ scale. These lines will be widened and darkened at the completion of the project.

AutoCAD. Set the **UNITS** command to **Architectural** and the 'smallest fraction' setting to 'sixteenths'. Set **LIMITS** as follows: lower left (-5′-0″, -5′-0″) and upper right (60′-0″, 50′-0″). **ZOOM, ALL.** Set **GRID** to 1′-0″ and **SNAP** to 6″. Resize these valuable drawing aids as needed throughout the project. Set the **LTSCALE** command to 32.

Create the following layers with corresponding colors and line types.

Layer name	Color	Line type
Border	Blue	Continuous
Matchline	White	Phantom
Centerlines	Yellow	Center
Foundations	Cyan	Continuous
Steel	Cyan	Continuous
Equipment	Green	Continuous
Pipe	Yellow	Continuous
Instruments	Red	Continuous
Text	Green	Continuous
Dimensions	Magenta	Continuous

Make 'Matchline' the current working layer. Set **COLOR** and **LINETYPE** to 'Bylayer'. Figure 10-3 will be used as a reference to lay out the unit boundary matchlines from the 0′-0″, 0′-0″ origin. Using the **PLINE** command with a line width of 1″, draw the unit matchlines.

Procedure 4: Lay out centerlines for pipe rack and equipment foundations

Reference drawing: Equipment location plan

Manual. Lay out the pipe rack and equipment foundation centerlines by measuring from the N. 0′-0″ and W. 0′-0″ (lower left) corner. Do not measure from the sides of the drawing borders. If your border is incorrect, your centerlines will be located in the wrong place. Use a .5mm lead. This will keep the centerlines thin and dark.

AutoCAD. Make 'Centerline' the current working layer. Use the **OFFSET** command to draw lines parallel to the north and west match lines to represent the intersecting coordinates of the pipe rack and equipment centerlines. **EXPLODE** each new line. Use **CHPROP** to change these lines to the 'Centerlines' layer. **TRIM** or **BREAK** these lines to create short intersections representing the equipment centerlines.

Once the equipment centerlines are located your drawing should appear as shown in Figure 10-4.

Procedure 5: Drawing pipe rack and equipment foundations

Reference drawing: Equipment location foundation drawing (see Figure 10-5) and foundation drawing for individual pieces of equipment (see Figures 10-6 through 10-11).

Manual. Use the coordinates shown on the equipment foundation drawing and the dimensions provided on the foundation drawing for each individual piece of equipment to locate the equipment foundations. Foundations located below mechanical equipment should be drawn with hidden lines. Add pipe rack and miscellaneous pipe support foundations using dimensions.

AutoCAD. Make 'Foundations' the current working layer. Use the **LINE** command to draw equipment, pipe rack, and pipe support foundations from coordinates and dimensions shown on the equipment foundation drawings. Use **CHPROP** to change the linetype of the foundations located below the mechanical equipment from 'continuous' lines to 'hidden' lines.

Your drawing should appear as shown in Figure 10-5 when Procedure 5 is completed.

Procedure 6: Equipment layout

Reference drawings: Equipment vendor drawings

Use dimensions provided on the equipment vendor drawings to lay out the equipment as represented in Figure 10-12. The equipment vendor drawings are shown in Figures 10-13 through 10-18.

Manual. All mechanical equipment is drawn with dark, thin lines. Use a .5mm lead. Size and location dimensions for ladder and platform details are supplied with vendor drawings V-101 and V-102.

AutoCAD. Make 'Equipment' the current working layer. Represent all mechanical equipment with the **LINE** command. Ladder and

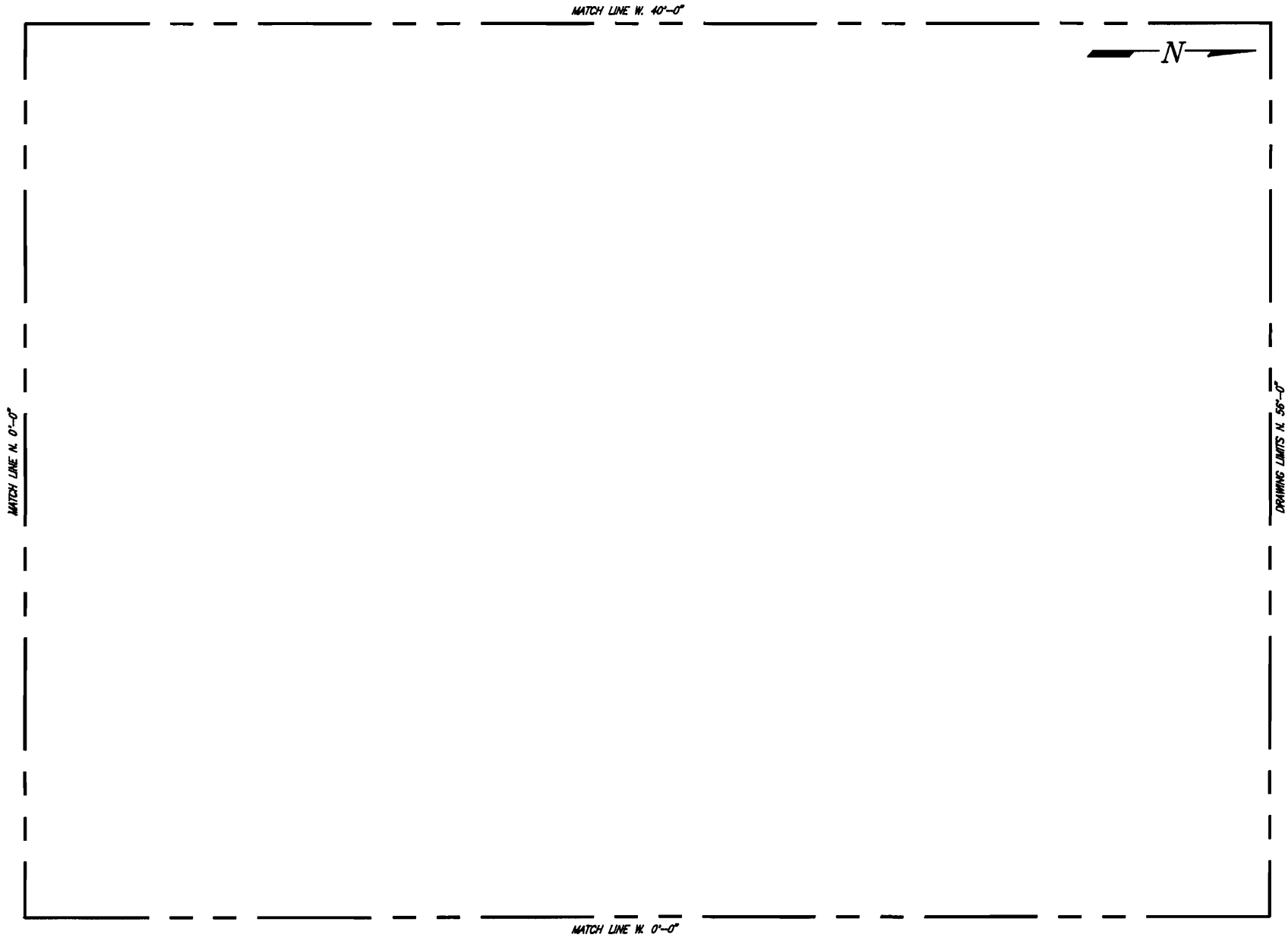

Figure 10-3. Unit matchlines.

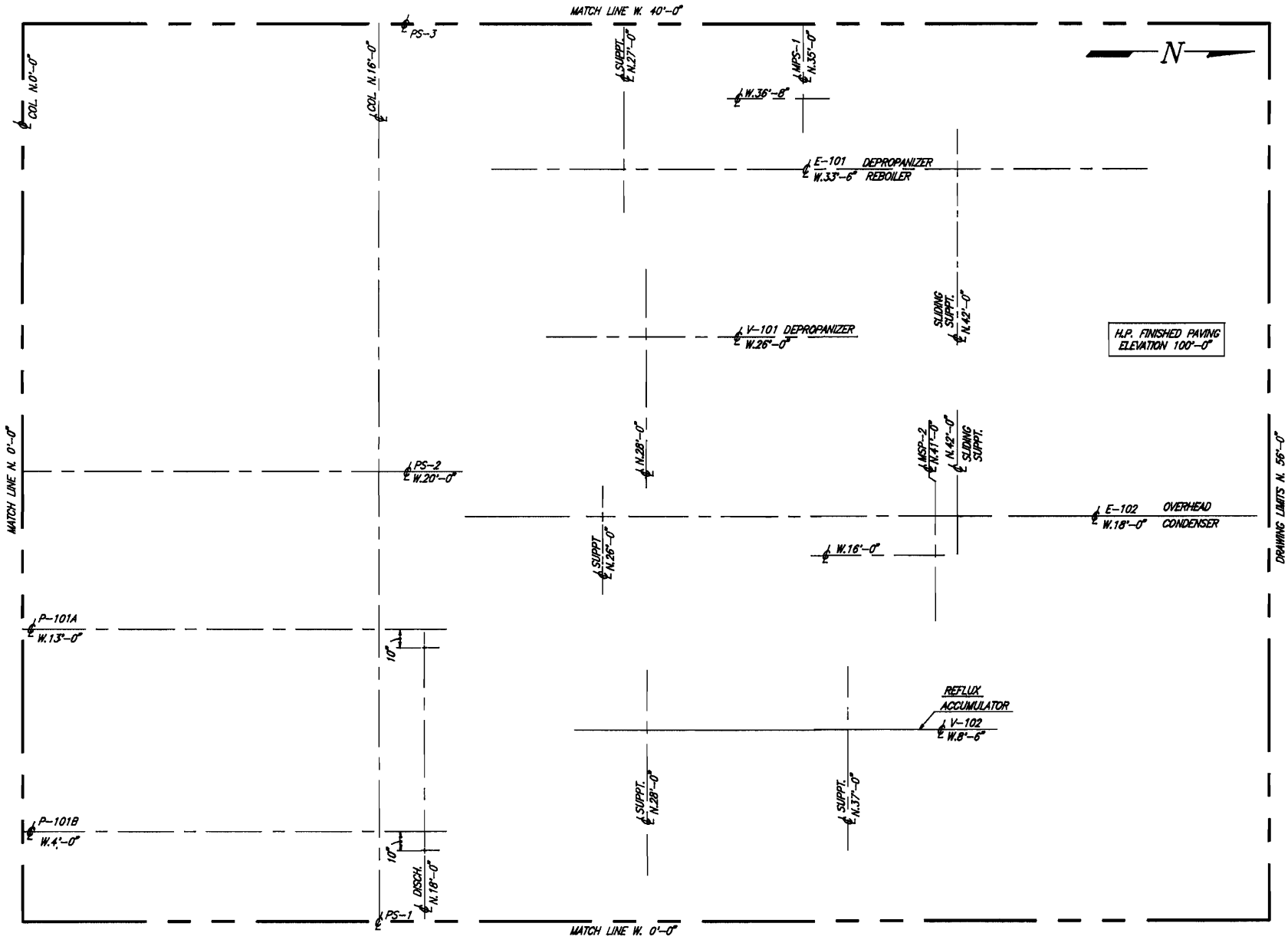

Figure 10-4. Equipment centerlines.

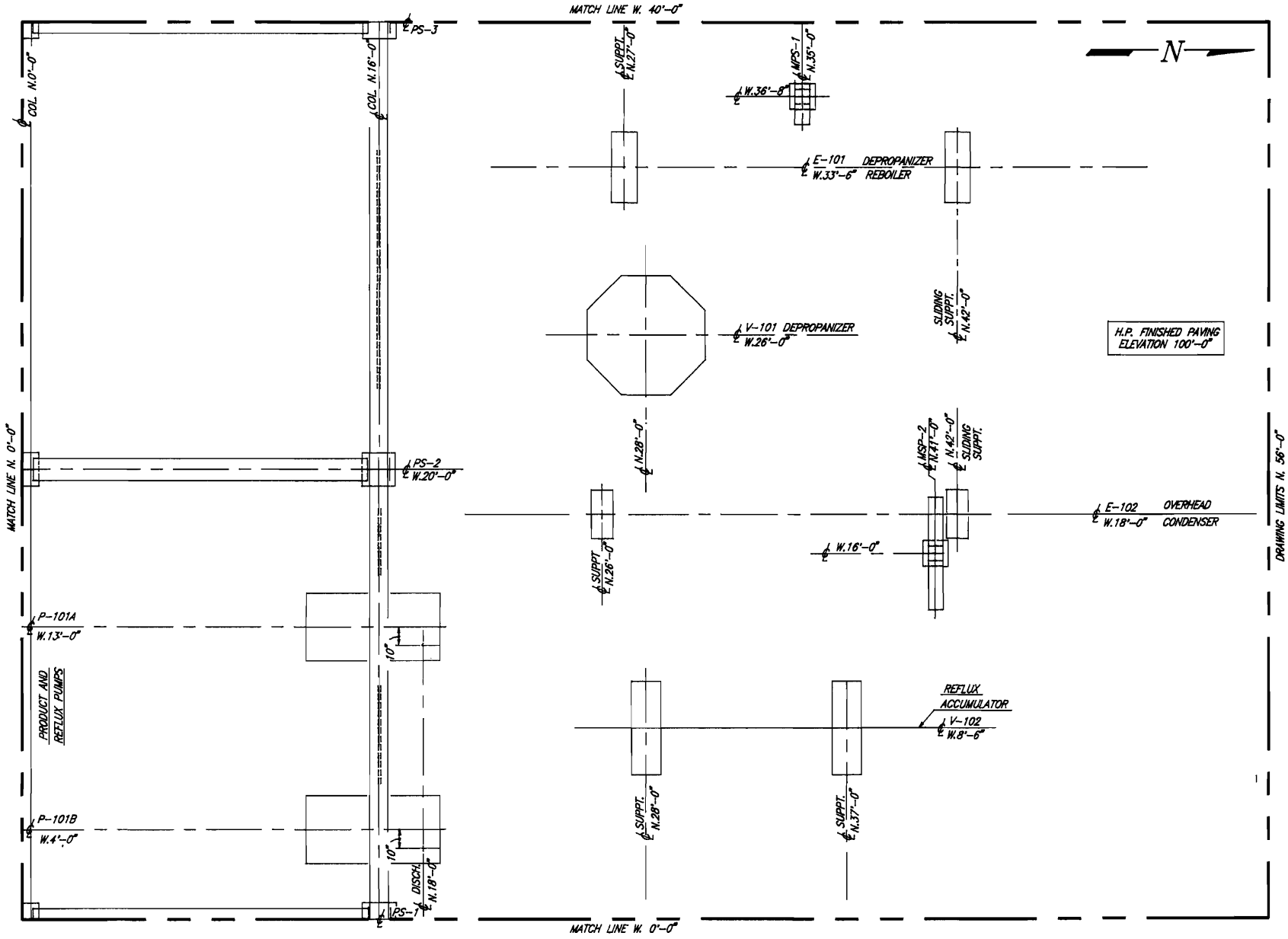

Figure 10-5. Equipment foundation location drawing.

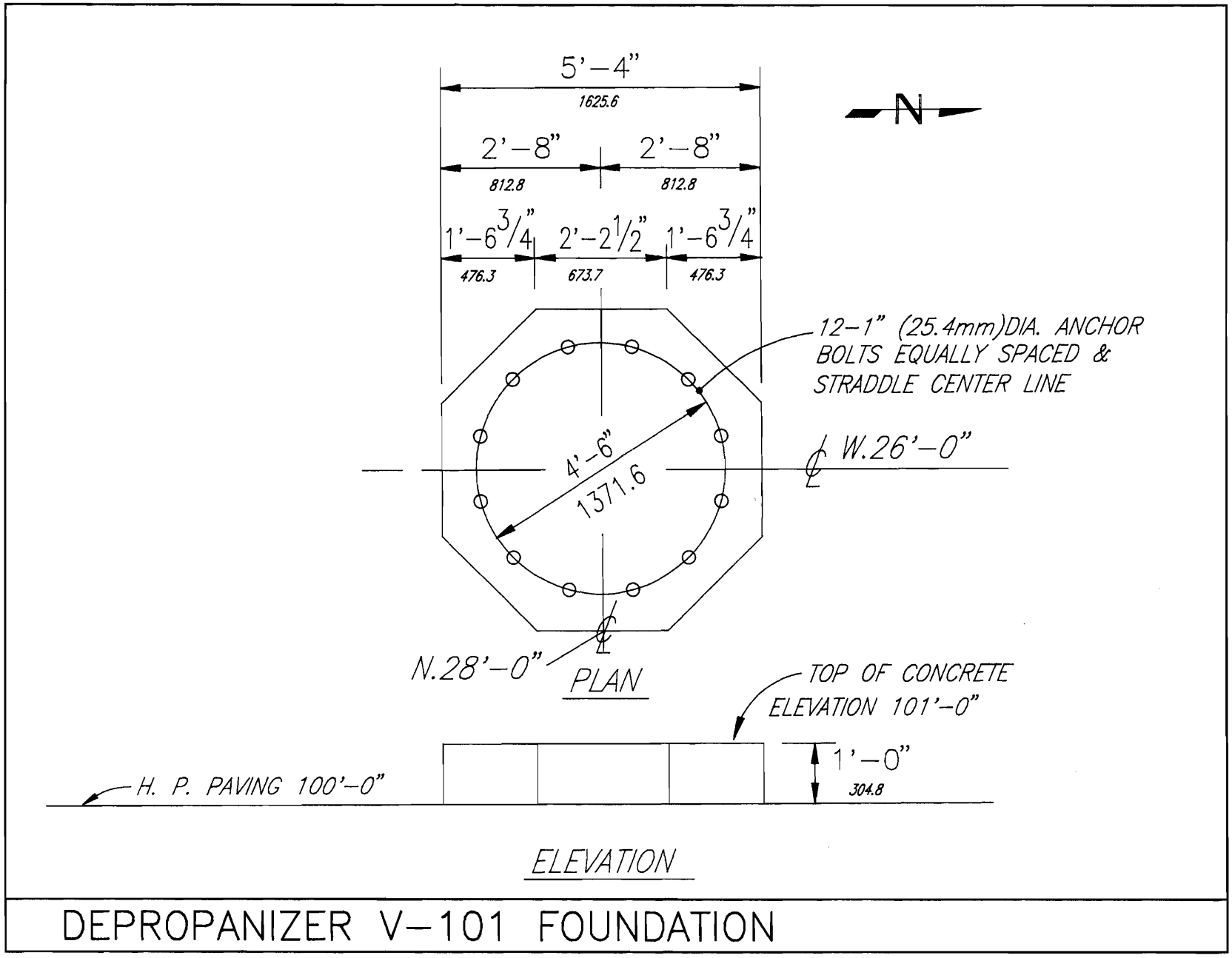

Figure 10-6. V-101 vertical vessel foundation drawing.

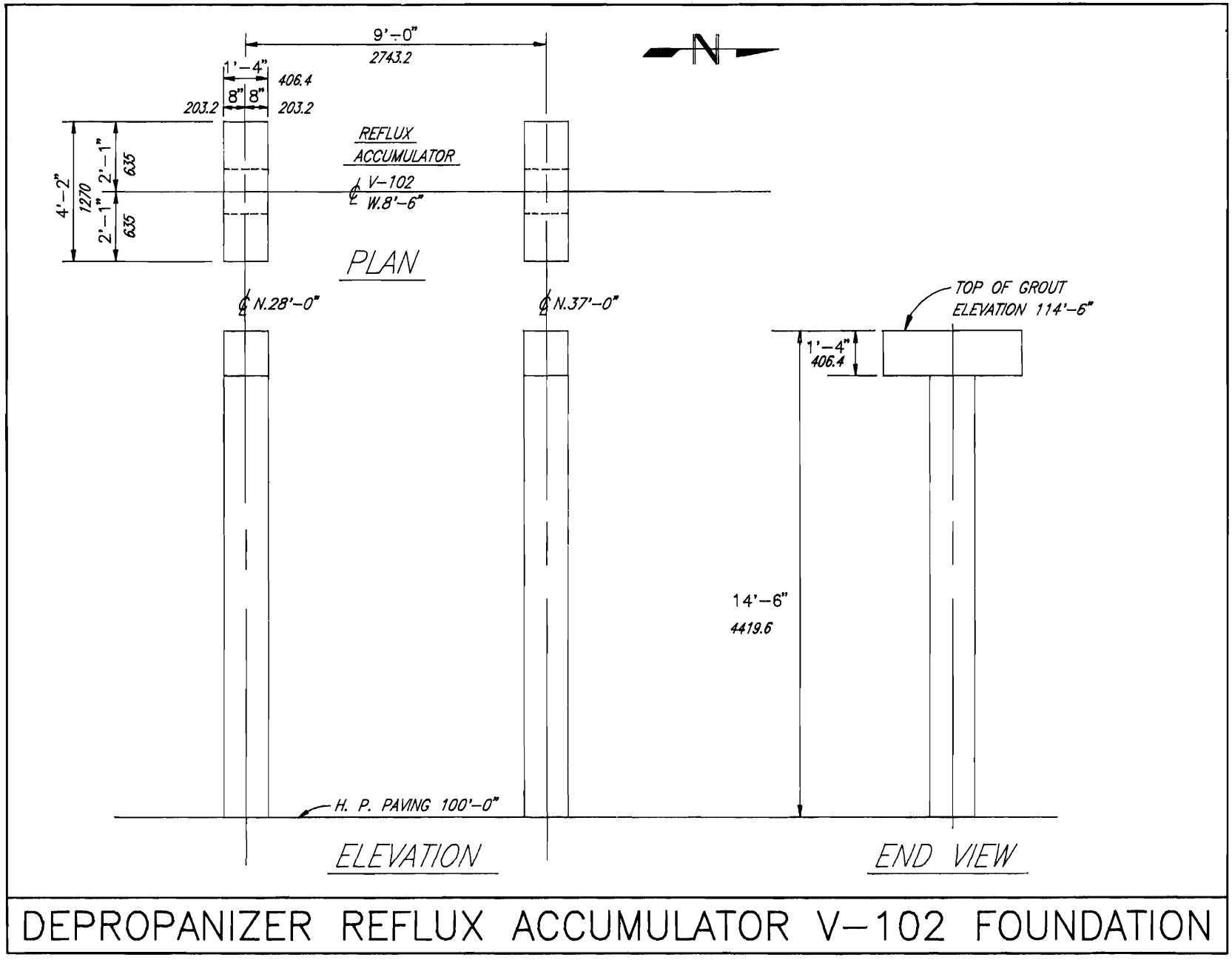

Figure 10-7. V-102 horizontal vessel foundation drawing.

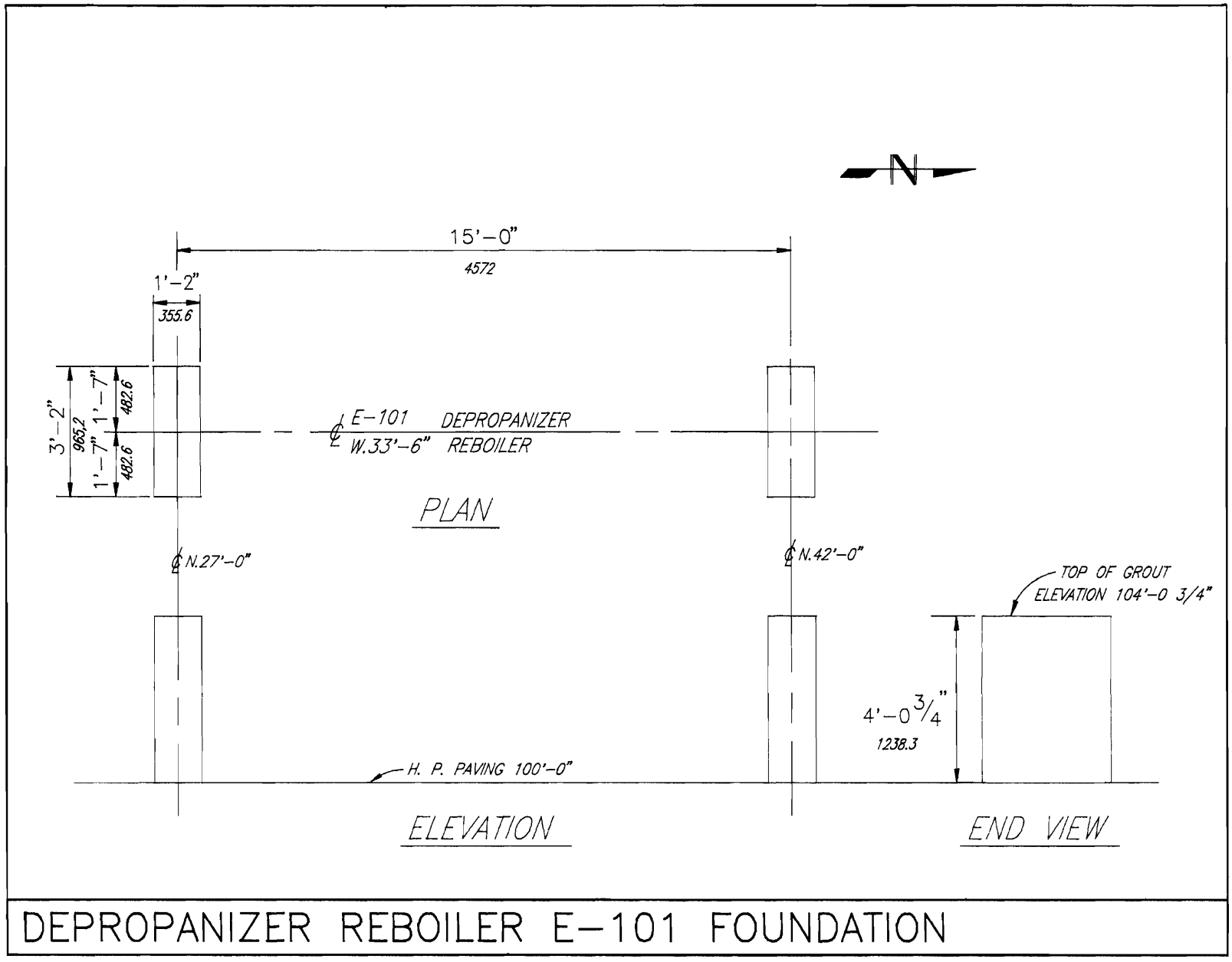

Figure 10-8. E-101 kettle reboiler foundation drawing.

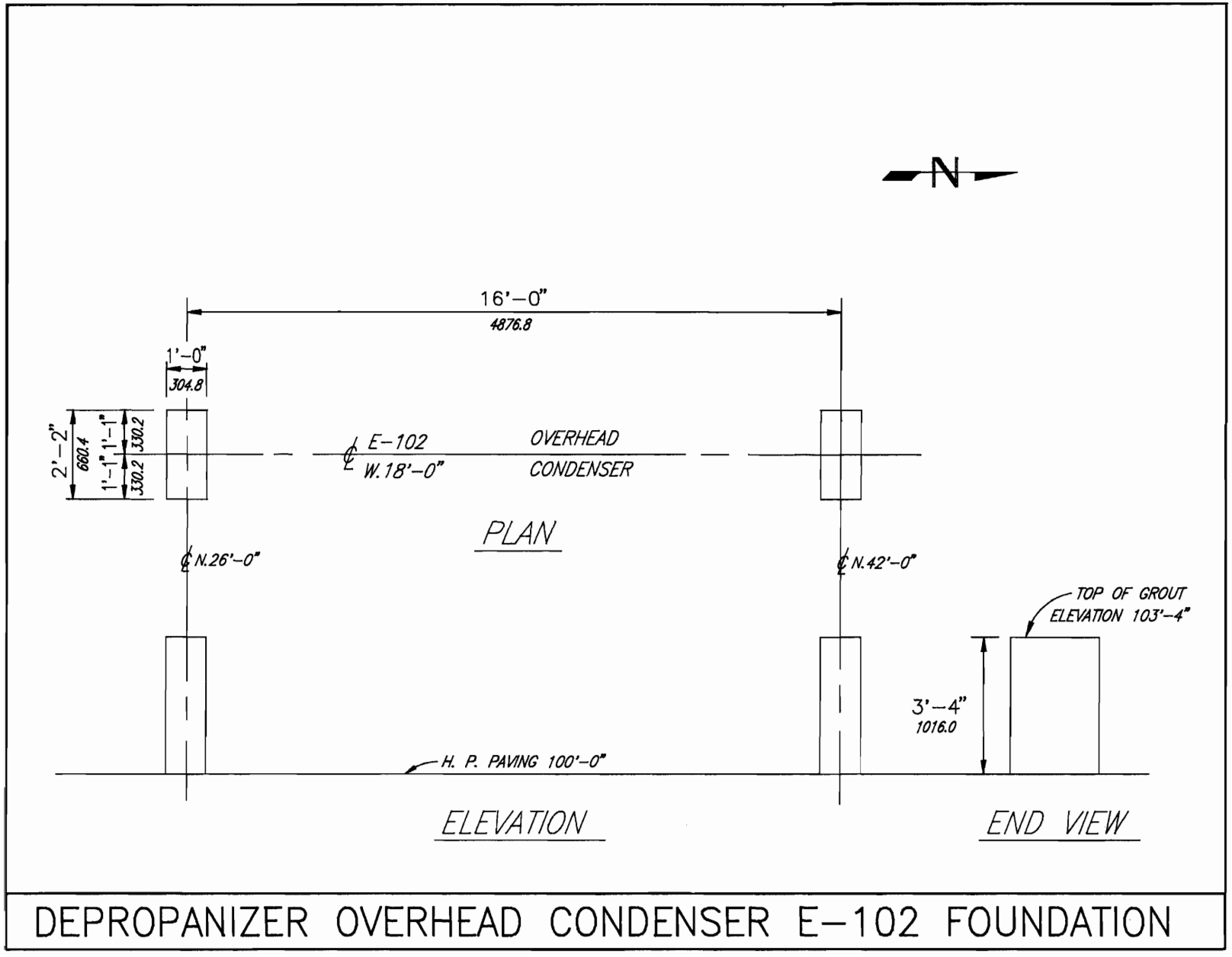

Figure 10-9. E-102 heat exchanger foundation drawing.

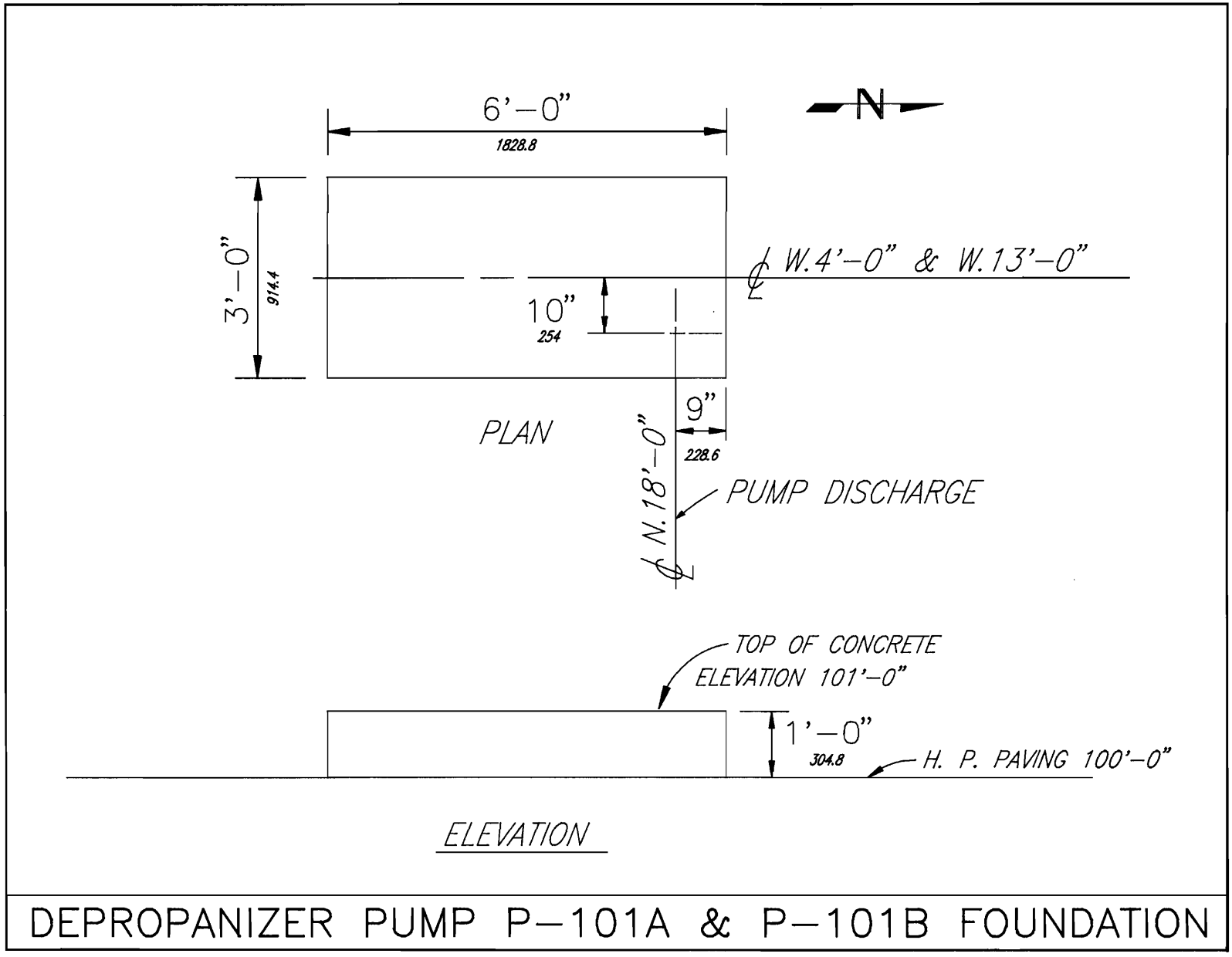

Figure 10-10. P-101A and 101B pump foundation drawing.

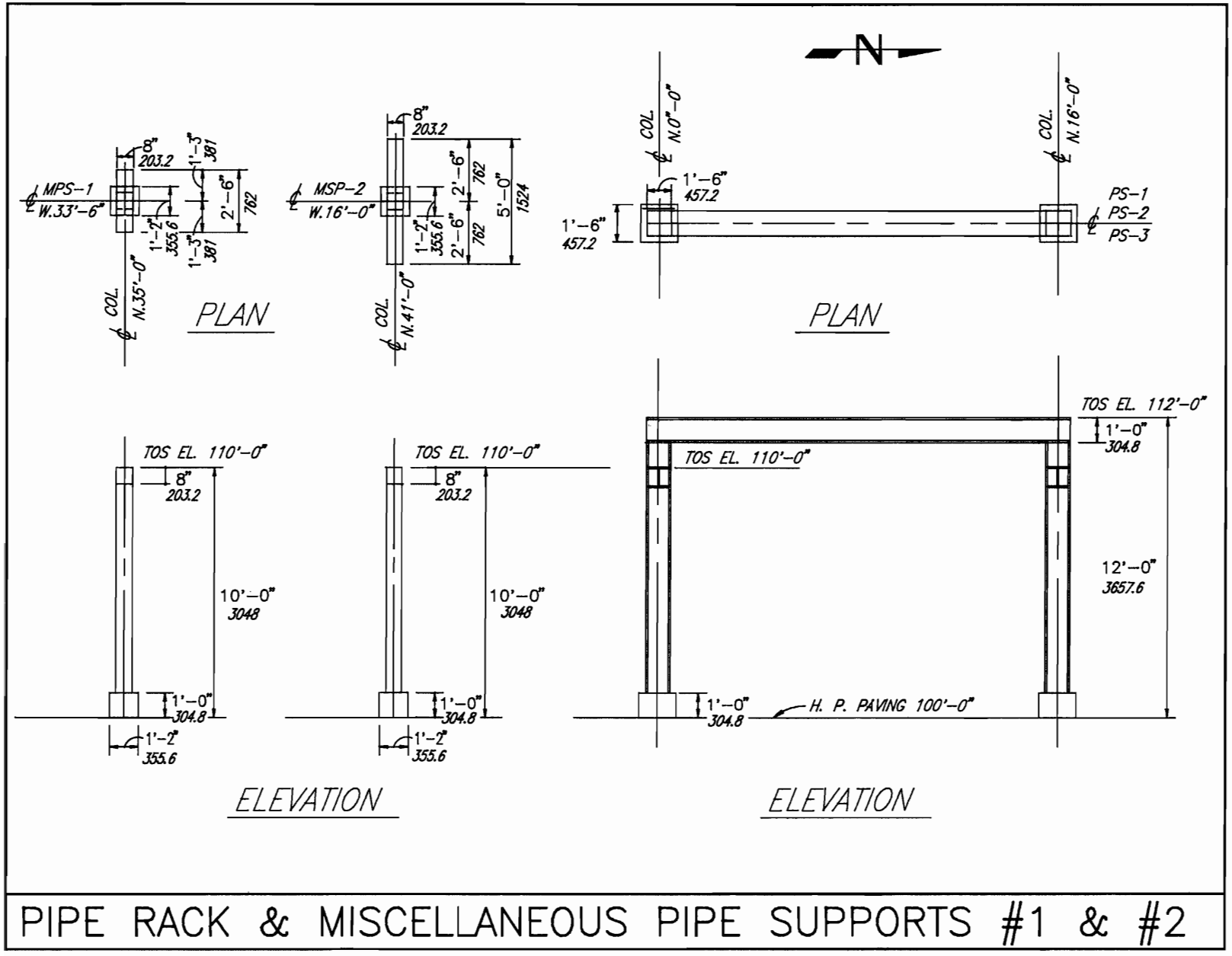

Figure 10-11. Pipe rack and pipe supports MPS-1 and MPS-2.

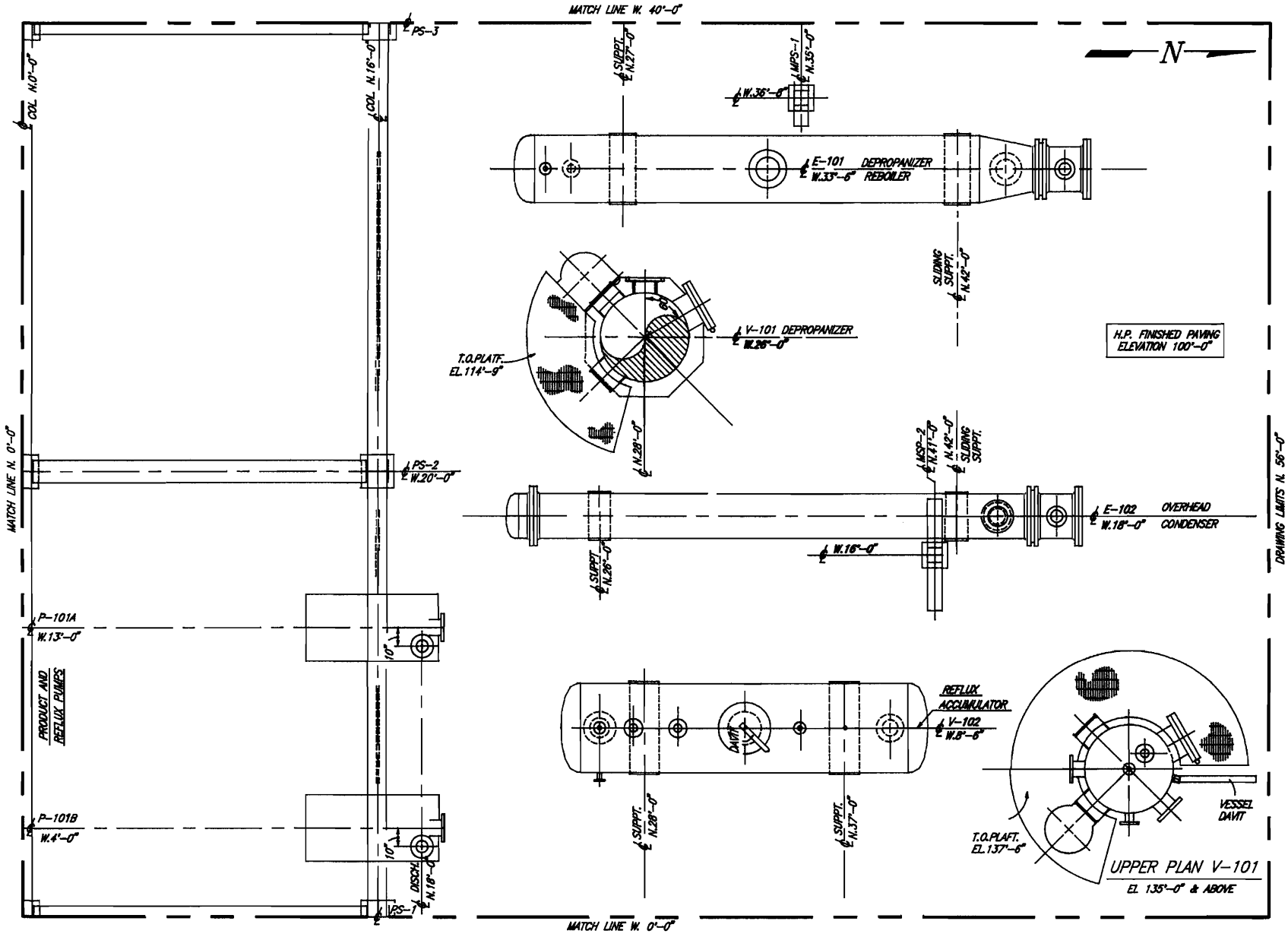

Figure 10-12. Equipment location drawing.

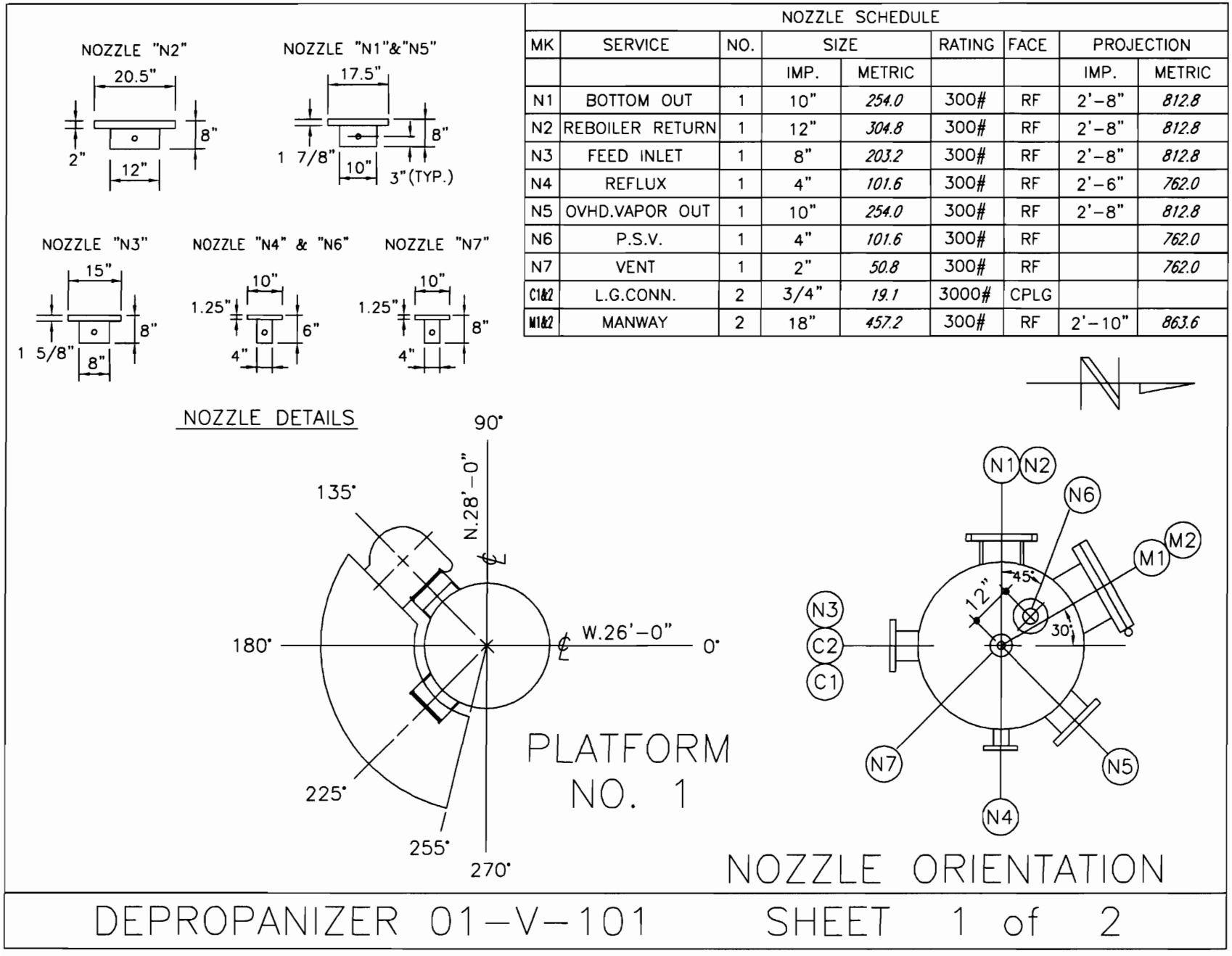

NOZZLE SCHEDULE

MK	SERVICE	NO.	SIZE		RATING	FACE	PROJECTION	
			IMP.	METRIC			IMP.	METRIC
N1	BOTTOM OUT	1	10"	*254.0*	300#	RF	2'-8"	*812.8*
N2	REBOILER RETURN	1	12"	*304.8*	300#	RF	2'-8"	*812.8*
N3	FEED INLET	1	8"	*203.2*	300#	RF	2'-8"	*812.8*
N4	REFLUX	1	4"	*101.6*	300#	RF	2'-6"	*762.0*
N5	OVHD.VAPOR OUT	1	10"	*254.0*	300#	RF	2'-8"	*812.8*
N6	P.S.V.	1	4"	*101.6*	300#	RF		*762.0*
N7	VENT	1	2"	*50.8*	300#	RF		*762.0*
C1&2	L.G.CONN.	2	3/4"	*19.1*	3000#	CPLG		
M1&2	MANWAY	2	18"	*457.2*	300#	RF	2'-10"	*863.6*

Figure 10-13. V-101 vertical vessel.

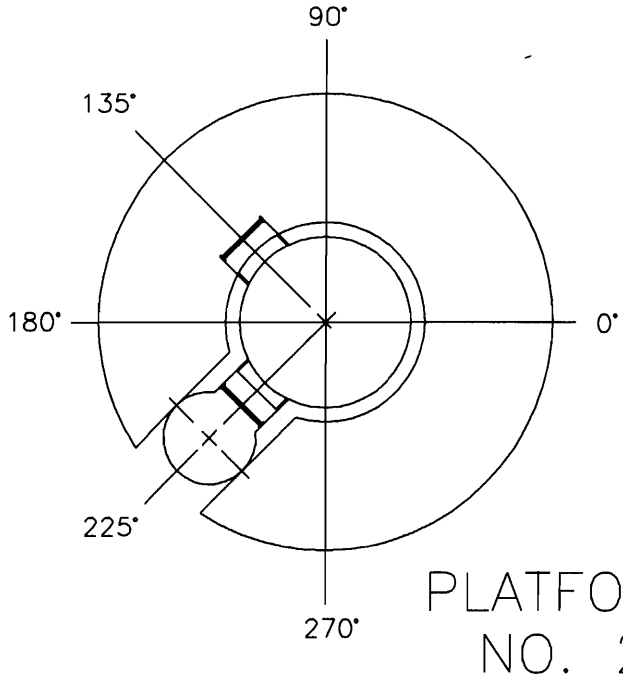

NOZZLE SCHEDULE								
MK	SERVICE	NO.	SIZE		RATING	FACE	PROJECTION	
			IMP.	METRIC			IMP.	METRIC
N1	BOTTOM OUT	1	10"	*254.0*	300#	RF	2'-8"	*812.8*
N2	REBOILER RETURN	1	12"	*304.8*	300#	RF	2'-8"	*812.8*
N3	FEED INLET	1	8"	*203.2*	300#	RF	2'-8"	*812.8*
N4	REFLUX	1	4"	*101.6*	300#	RF	2'-6"	*762.0*
N5	OVHD.VAPOR OUT	1	10"	*254.0*	300#	RF	2'-8"	*812.8*
N6	P.S.V.	1	4"	*101.6*	300#	RF		*812.8*
N7	VENT	1	2"	*50.8*	300#	RF		*762.0*
C1&2	L.G.CONN.	2	3/4"	*19.1*	3000#	CPLG		
M1&2	MANWAY	2	18"	*457.2*	300#	RF	2'-10"	*863.6*

NOTE:

1. THIS EQUIPMENT DRAWING SHOWS ELEVATIONS OF ALL NOZZLES. REFER TO DEPROPANZIER PLAN DRAWING 01-V-101 1 of 2 FOR NOZZLE ORIENTATION.
2. THE ELEVATIONS SHOWN ON THE EQUIPMENT DRAWING DO NOT INCLUDE 1'-0" CONCRETE FOUNDATION.

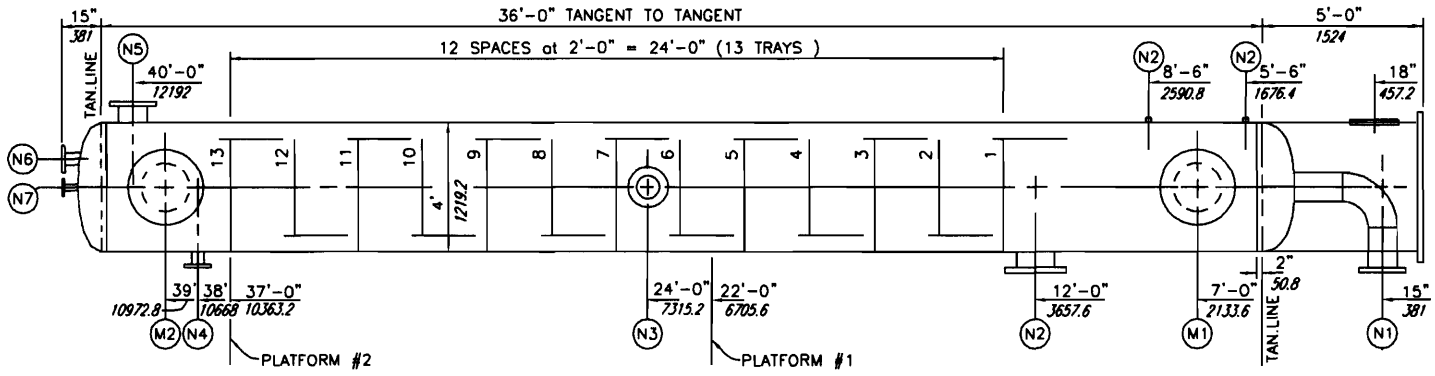

DEPROPANIZER 01-V-101 SHEET 2 of 2

Figure 10-14. V-101 vertical vessel.

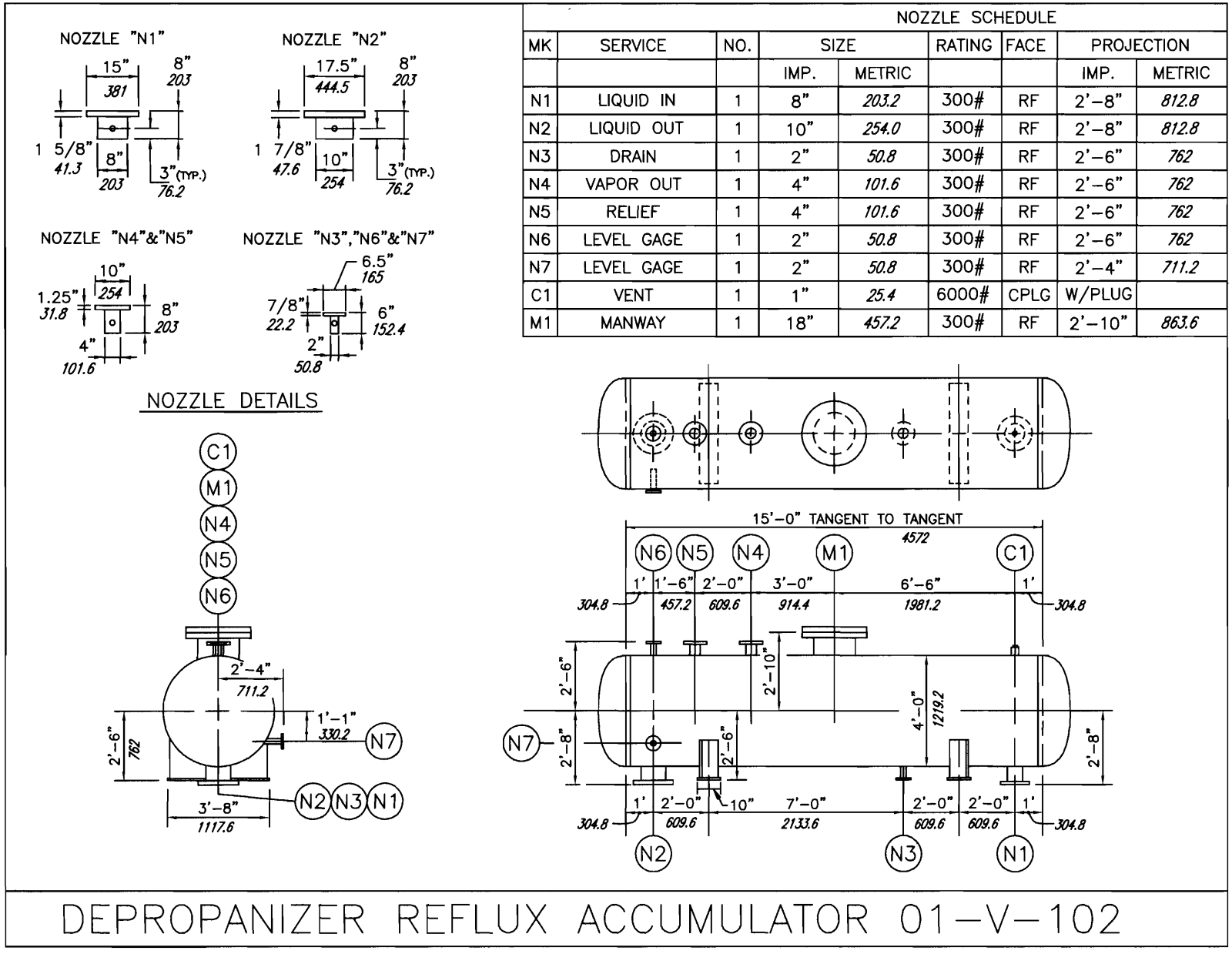

NOZZLE SCHEDULE

MK	SERVICE	NO.	SIZE		RATING	FACE	PROJECTION	
			IMP.	METRIC			IMP.	METRIC
N1	LIQUID IN	1	8"	*203.2*	300#	RF	2'-8"	*812.8*
N2	LIQUID OUT	1	10"	*254.0*	300#	RF	2'-8"	*812.8*
N3	DRAIN	1	2"	*50.8*	300#	RF	2'-6"	*762*
N4	VAPOR OUT	1	4"	*101.6*	300#	RF	2'-6"	*762*
N5	RELIEF	1	4"	*101.6*	300#	RF	2'-6"	*762*
N6	LEVEL GAGE	1	2"	*50.8*	300#	RF	2'-6"	*762*
N7	LEVEL GAGE	1	2"	*50.8*	300#	RF	2'-4"	*711.2*
C1	VENT	1	1"	*25.4*	6000#	CPLG	W/PLUG	
M1	MANWAY	1	18"	*457.2*	300#	RF	2'-10"	*863.6*

Figure 10-15. V-102 horizontal vessel.

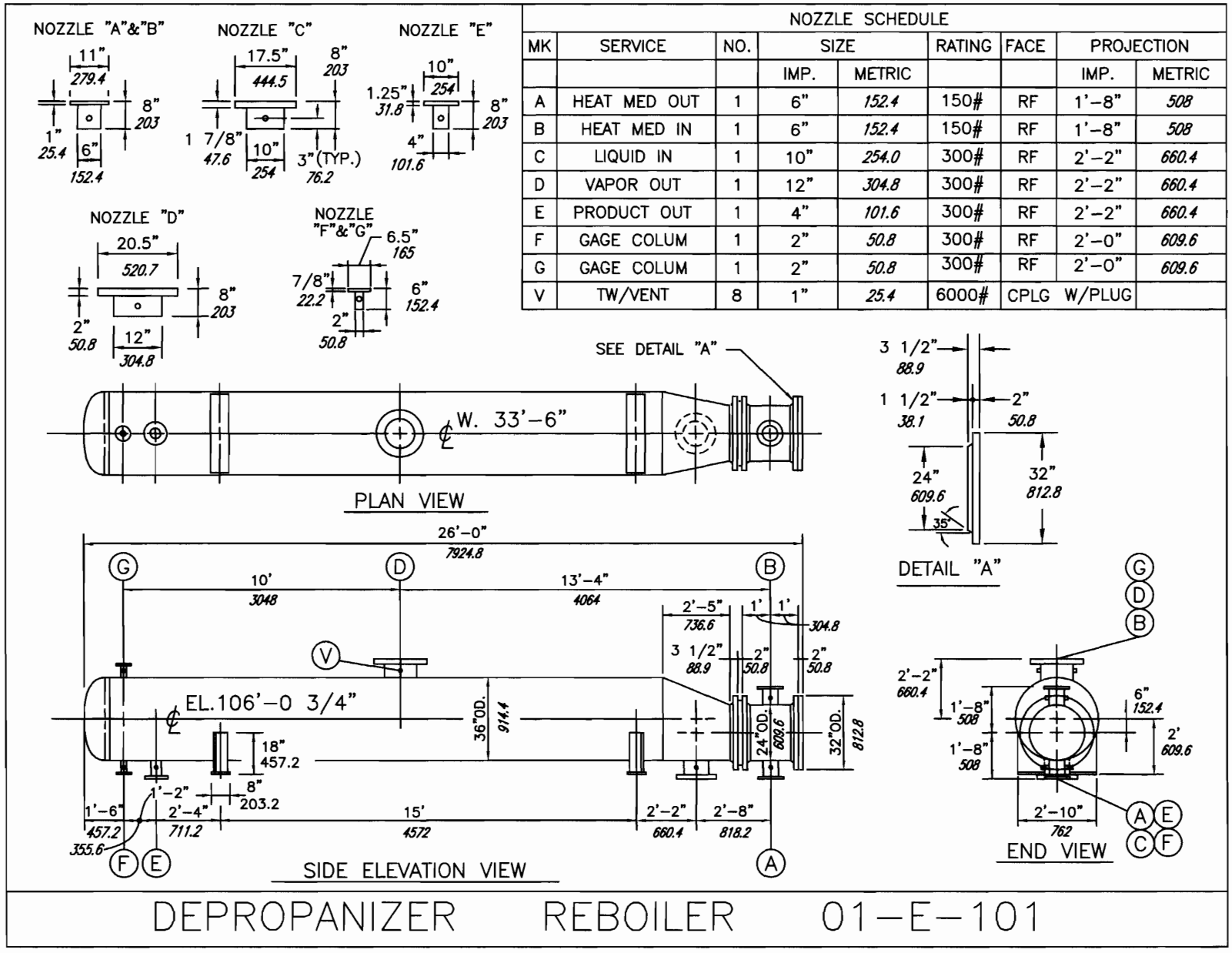

NOZZLE SCHEDULE

MK	SERVICE	NO.	SIZE		RATING	FACE	PROJECTION	
			IMP.	METRIC			IMP.	METRIC
A	HEAT MED OUT	1	6"	152.4	150#	RF	1'-8"	508
B	HEAT MED IN	1	6"	152.4	150#	RF	1'-8"	508
C	LIQUID IN	1	10"	254.0	300#	RF	2'-2"	660.4
D	VAPOR OUT	1	12"	304.8	300#	RF	2'-2"	660.4
E	PRODUCT OUT	1	4"	101.6	300#	RF	2'-2"	660.4
F	GAGE COLUM	1	2"	50.8	300#	RF	2'-0"	609.6
G	GAGE COLUM	1	2"	50.8	300#	RF	2'-0"	609.6
V	TW/VENT	8	1"	25.4	6000#	CPLG W/PLUG		

Figure 10-16. E-101 Kettle reboiler.

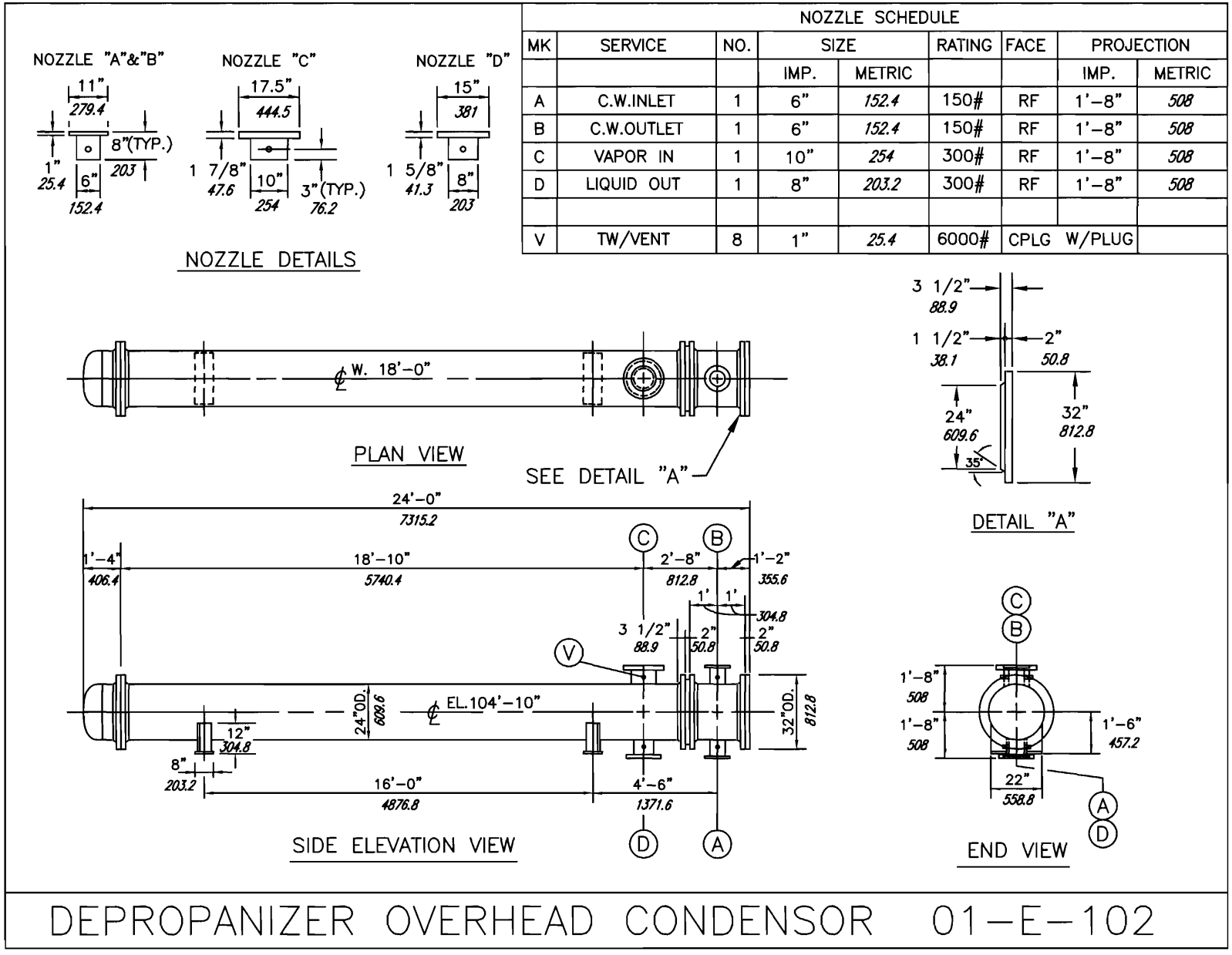

NOZZLE SCHEDULE

MK	SERVICE	NO.	SIZE		RATING	FACE	PROJECTION	
			IMP.	METRIC			IMP.	METRIC
A	C.W.INLET	1	6"	152.4	150#	RF	1'-8"	508
B	C.W.OUTLET	1	6"	152.4	150#	RF	1'-8"	508
C	VAPOR IN	1	10"	254	300#	RF	1'-8"	508
D	LIQUID OUT	1	8"	203.2	300#	RF	1'-8"	508
V	TW/VENT	8	1"	25.4	6000#	CPLG	W/PLUG	

Figure 10-17. E-102 heat exchanger.

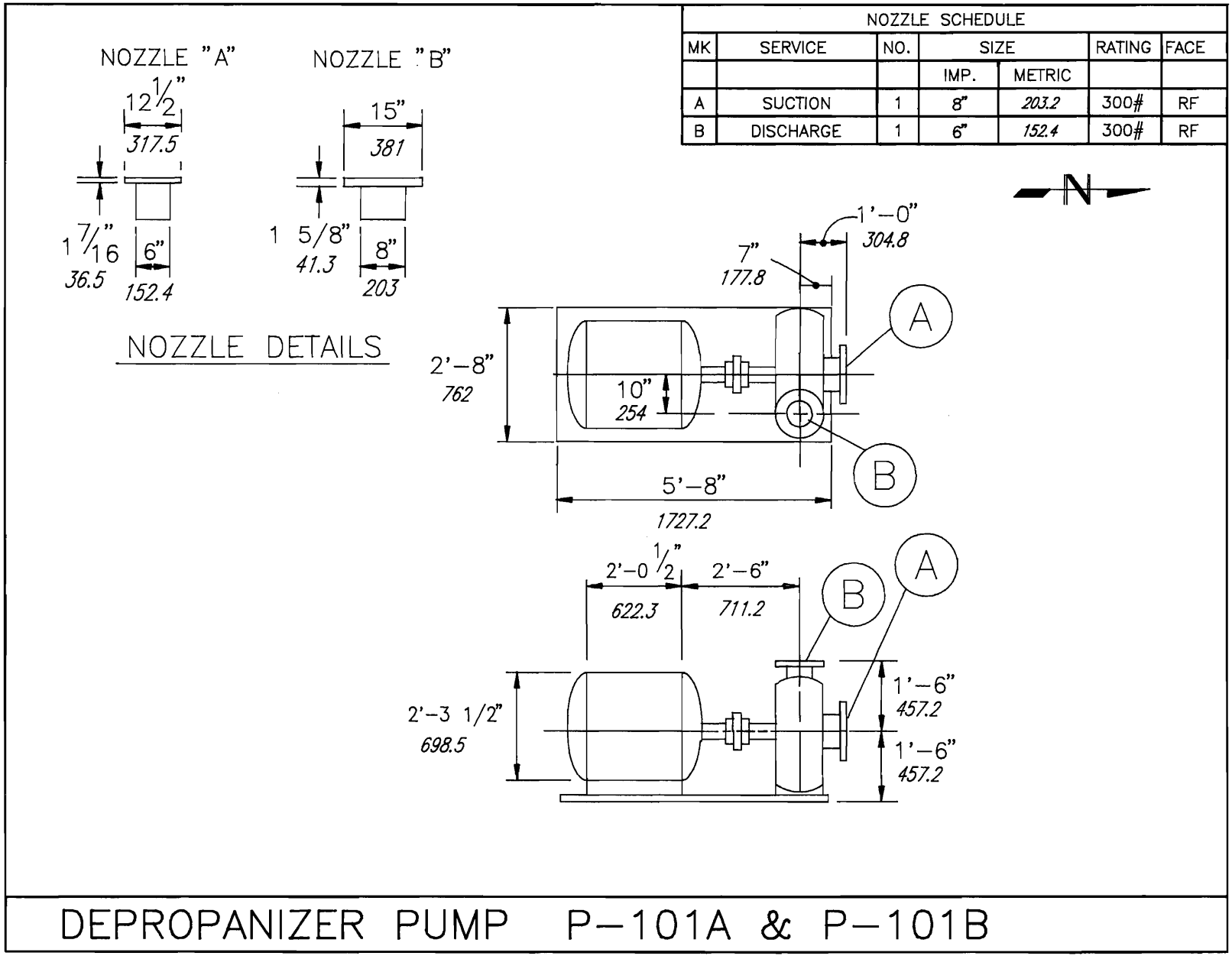

Figure 10-18. P-101A and 101B pumps.

platform dimensions are supplied with vendor drawings V-101 and V-102.

Procedures 7 and 8: Configuration of piping systems

Reference drawings: Mechanical flow diagram, equipment vendor drawings, and piping specifications

In procedures 7 and 8, each line will be described relative to the commodity flow direction. That is, the description of the pipe will correspond to the direction of the flow of the commodity within the pipe. Although the written description of the pipe does not include exact dimensions required for layout, dimensions for fittings, flanges, valves, and equipment can be found on dimensioning charts and vendor drawings. These dimensions will be needed to place the pipe on the arrangement drawing in its proper location and orientation. The 3-D modeled views of each line are shown in the upper right corner. This view will be especially beneficial when representing the lines on the arrangement drawing.

Manual. Represent pipe using nominal size dimensions with a .7mm lead. For lines 14″ and larger, pipe centerlines are drawn with a .5 mm lead.

AutoCAD. Make 'Pipe' the current working layer. Use the **LINE** command to draw all lines 14″ and larger as double-line pipes having actual OD dimensions. Centerlines for double-line pipes are drawn with **LINETYPE** set to 'Center'. Draw any single line pipe with the **PLINE** command having a width of .56″. The fitting, flange, and valve symbols created in the previous chapters can be inserted into their appropriate locations.

Routing

Configurations for lines 01-1-C30-8″ through 01-16-C30-2″.

As shown in Figure 10-19, line 01-1-C30-8″ enters Unit 01 at the west end of the pipe rack. 14′-0″ from the west match line, two elbows welded together turn the line down and north to drop out of the rack at centerline elevation 110′-4 5/16″. The line travels north before it turns up and into vessel V-101 at nozzle **N3.** A 300# gate valve is located fitting make-up below nozzle **N3.** Its handwheel is oriented toward the west.

Figure 10-20 shows the plan and elevation views of depropanizer, V-101, and kettle reboiler, E-101, with its associated piping, lines 01-2-C30-10″ and 01-3-C30-12″.

Line 01-2-C30-10″ starts at nozzle **N1** on V-101. Begin at nozzle **N1** with a flange and an elbow that are welded together. The elbow is welded onto the flange so that it points toward the north. A straight run of pipe travels north and another elbow turns west once the north run aligns with nozzle **C** of E-101. After a short run of pipe, an elbow turns up and a flange connects to nozzle **C.**

Line 01-3-C30-12″ connects to E-101 at nozzle **D.** Begin with a flange and short vertical length of pipe. An elbow is attached that turns south. Another short run of pipe travels south and has an elbow that turns west and connects to V-101 at nozzle **N2.**

Notice in Figure 10-21 that nozzle **N5** of line 01-4-C30-10″ is oriented on vessel V-101 at a 45° angle. Coming out of the nozzle fitting make-up at centerline elevation 141′-0″, the line turns down. A long, vertical drop brings the line to centerline elevation 110′-5 3/8″, where it turns east. When the pipe aligns with the centerline of E-102, it turns north. As the line travels north, it rests on a steel support then turns down into nozzle **C** of E-102. Lines that drop down the side of a vertical vessel typically are supported and guided by pipe supports and guides attached to the side of a vessel. Figure 10-22 shows a typical pipe support.

Line 01-5-C30-8″ transports condensed vapor from E-102 to the overhead accumulator V-102 by attaching to nozzle **D** on the bottom on E-102 and traveling to **N1** on V-102. This 300# line drops out of nozzle **D** fitting make-up and turns east 2′-7″. After a vertical run of pipe, an elbow turns the configuration south to rest on steel at elevation 110′-0″. The pipe continues south to align with nozzle **N1** of V-102. Once aligned with nozzle **N1,** an elbow turns east before turning up into **N1** fitting make-up (see Figure 10-23).

Lines 01-6-C30-10″ and 01-7-C30-6″ and 4″ are suction and discharge lines for pumps P-101A and P-101B. Line 01-6-C30-10″, the suction line, is a 10″ configuration that connects to nozzle **N2** which drops out of the bottom of V-102. An elbow turns south after a vertical drop to centerline elevation 108′-9″. After a short southerly run, the line tees east and west to align with the centerline of pumps P-101A and P-101B. Once the east and west branches align with the centerline of the two pumps, an elbow turns down into a vertical run. Within each of these vertical drops is a gate valve that has been installed so that the handwheel is rotated 45° to the southwest. Attaching fitting make-up to the valve is an elbow that turns south. A 10″ × 8″ eccentric reducer is installed with the flat side on top, (FOT), before the line connects to the pump suction nozzle (see Figure 10-24).

Line 01-7-C30-6″ and 4″ shown in Figures 10-25 and 10-26, is a long line that connects to the discharge nozzles of pumps P-101A and P-101B and travels to nozzle **N4** on

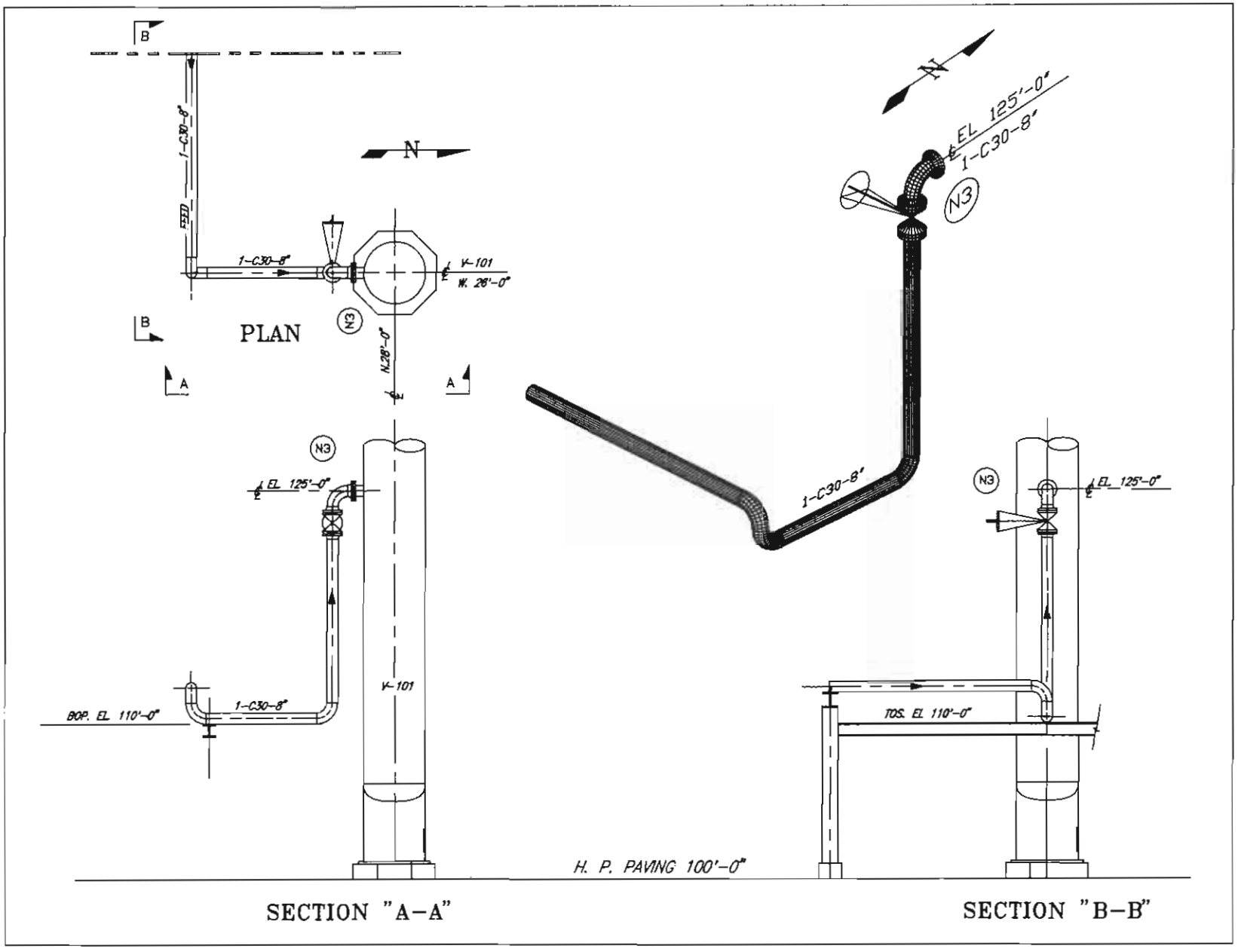

Figure 10-19. Line 01-1-C30-8".

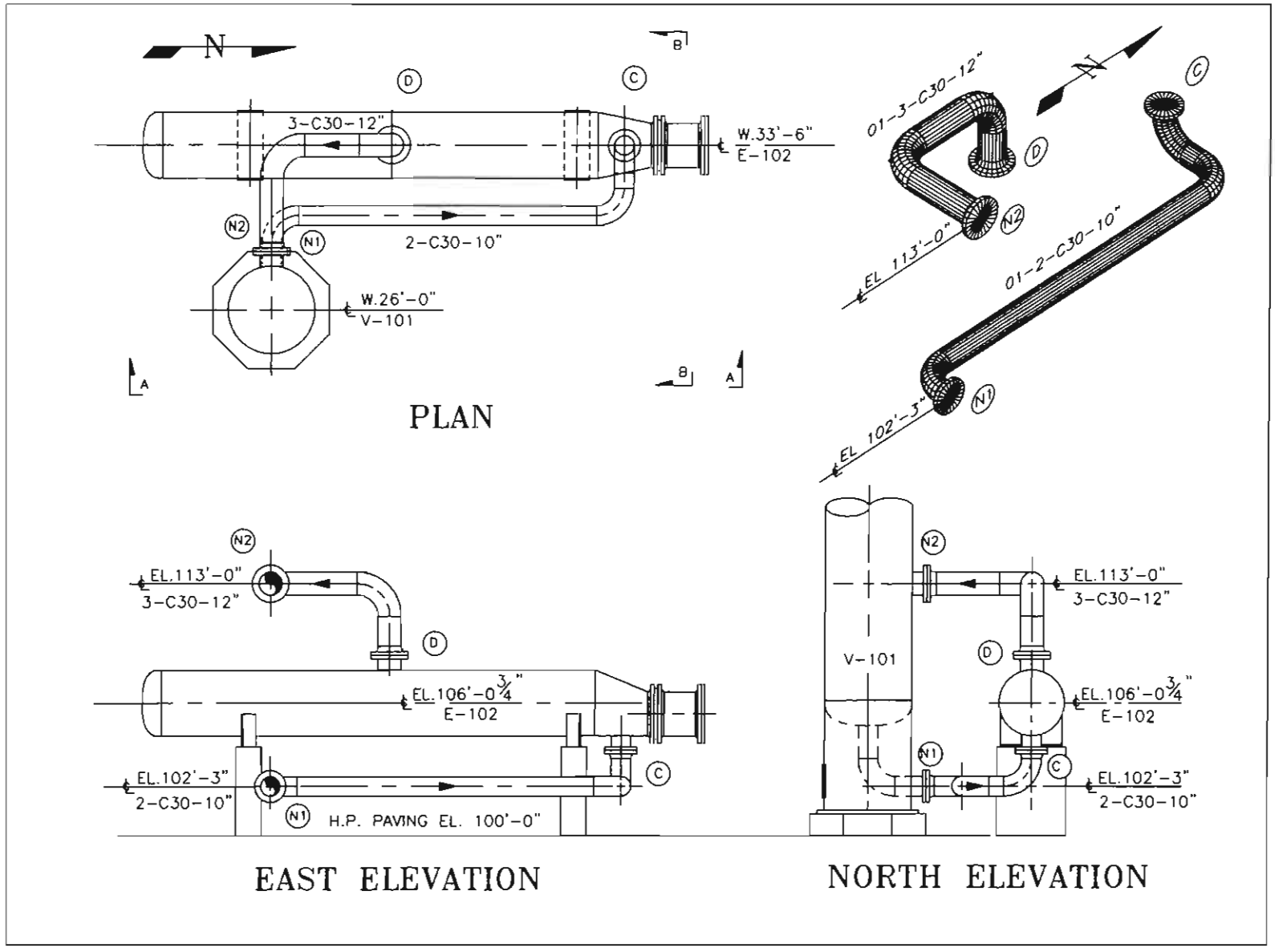

Figure 10-20. Lines 01-2-C30-10″ and 01-3-C30-12″.

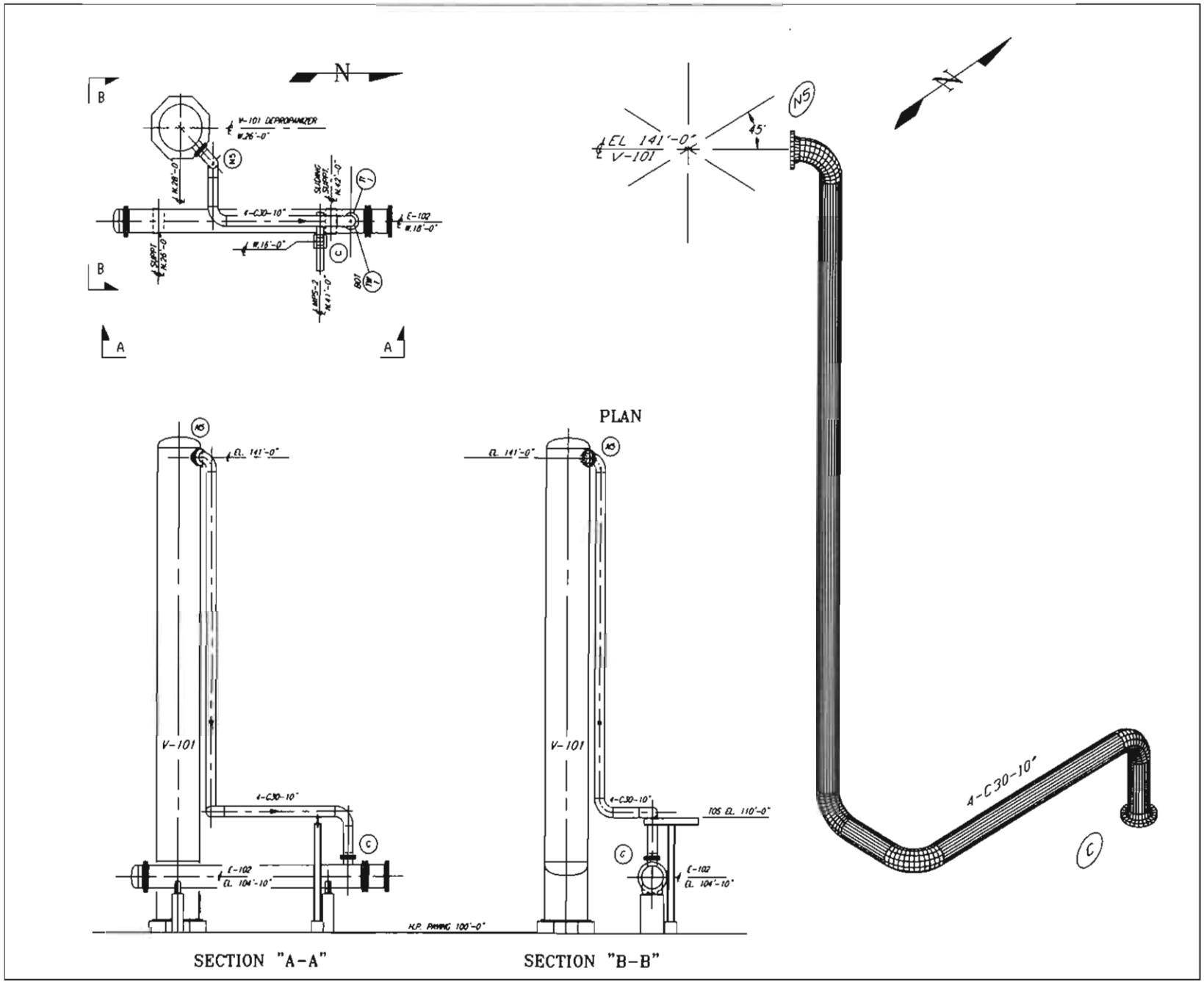

Figure 10-21. Line 01-4-C30-10".

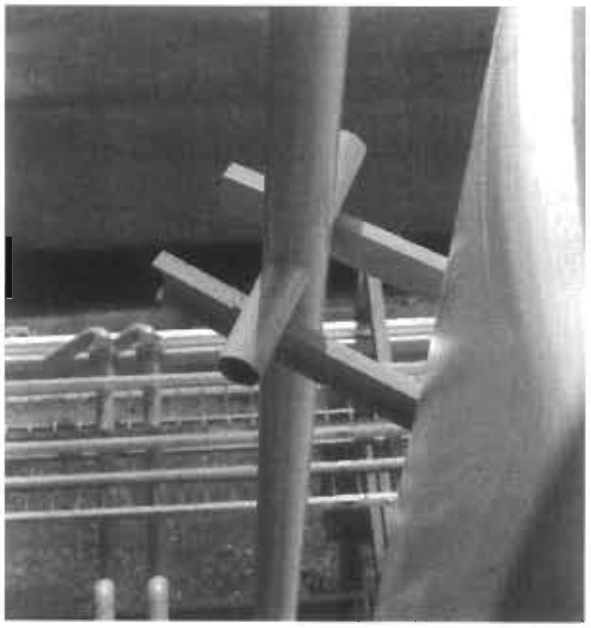

Figure 10-22. Typical pipe support.

vessel V-101. Rising vertically out of the pump discharge nozzle the line increases to a 6″ diameter. A check valve precedes a block valve before the two lines turn toward each other. Equidistant from the two pumps, the line tees to create another vertical run. At a centerline elevation of 110′-3⁵⁄₁₆″ an elbow turns south, travels 3′-2″, turns up 2′-0″, and tees again turning east and west. A 6″ × 4″ eccentric reducer (FOB) is welded to each end of the tee. Now within the pipe rack, the branch traveling east becomes line 01-8-C30-6″ and continues down the pipe rack to the battery limit.

The branch traveling west is a continuation of line 01-7-C30-6″. After a run of pipe 14′-10½″ long from the center of the tee, an elbow turns down 2′-0″ out of the rack, and heads north. This north run is a long run of pipe having an orifice flange assembly positioned in a specific location. Long runs of pipe with an orifice flange assembly are known as a meter run. Meter runs are discussed in greater detail in Chapter 12, Piping Systems. The orifice flange assembly is located 2′-11″ from the downstream end and 7′-0″ from the upstream end. Line 01-7-C30-6″ then turns down into a control valve manifold, also discussed in Chapter 12, Piping Systems. The control valve manifold, also known as a "control station" or "control set," turns the line north to align with the centerline of V-101. The line rises up the side of V-101 and attaches to nozzle **N4**. The plan and elevation views of the control station are shown in Figure 10-26.

Line 01-9-C30-4″ begins by dropping out of the bottom of E-101 at nozzle **E**. The line turns east before rising to centerline elevation 110′-2¼″. Once at this height, an elbow turns south, travels 6′-8″ and drops down into a control station. This control station is similar in size and appearance to the one used in line 01-7-C30-6″. The control station runs in an east to west direction and lies 2′-0″ to the north of the centerline of the pipe rack. The handwheels of the block valves point south. Use the dimensions in Figure 10-27 to represent the control station on your drawing.

The west end of the control station rises to centerline elevation 110′-2¼″, turns south and runs below the pipe rack. The line then rises up through the rack, turns east, and travels offsite to product storage.

As shown in Figures 10-28 and 10-29, lines 01-10-A15-6″ IH and 01-11-A15-6″ IH are heating medium return and supply lines for E-101, respectively. Line 01-10-A15-6″ IH, the return line, is a simple line dropping out of E-101 at nozzle **A**. It turns west, then up, fitting make-up into a block valve. The line continues vertically to centerline elevation 110′-6⁵⁄₁₆″, where it turns south to enter the pipe rack. Once below the rack, the line turns up again and connects to an 8″ header via a stub-in.

Line 01-11-A15-6″-IH is the supply line for E-101. It comes from the heating medium supply header in the pipe rack. After dropping out of the rack, an elbow turns north into a meter run. Precise positioning of the orifice flange assembly must be established at this time. Because there is adequate upstream clearance to locate the assembly, we will determine its position based upon required downstream measurements. Using the guideline of 6 pipe diameters downstream, a minimum straight-run pipe distance of 3′-0″ (6 pipe diameters × 6″ pipe size = 36″) is required to the first weld. To locate the center of the orifice flange assembly, add 3′-0″ plus 9″, the center-to-end dimension of a 6″ elbow, which totals 3′-9″. This 3′-9″ total dimension establishes the position of the orifice flange assembly from the center of the elbow on the downstream side.

From the end of the meter run, the line drops down into a control station. The control station runs north and south and lies on the west side of E-101. Out of the north end of the control station, the line rolls 45° to the northeast and drops into nozzle **B** of E-101.

This layout conforms to the basic rule of piping for exchangers: hot stream in the top, cold stream out the bottom. As the hot oil goes through the tube bundle of the kettle reboiler, it loses its heat and begins to cool. Line 01-10-A15-6″-IH picks up this stream at nozzle **A** of E-101 and pipes it back to the pipe rack to be returned, via the heat medium return header, to a fired heater for

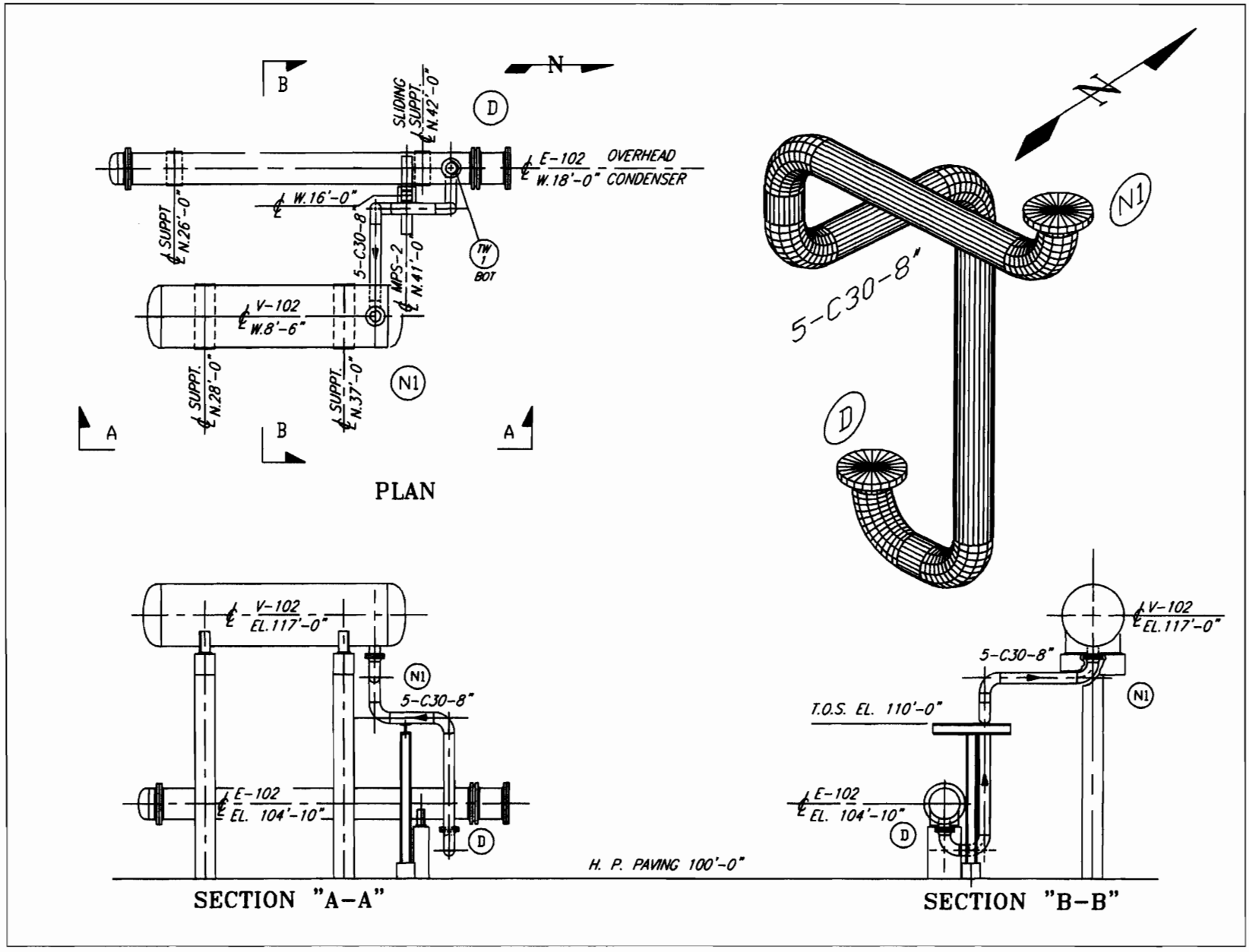

Figure 10-23. Line 01-5-C30-8".

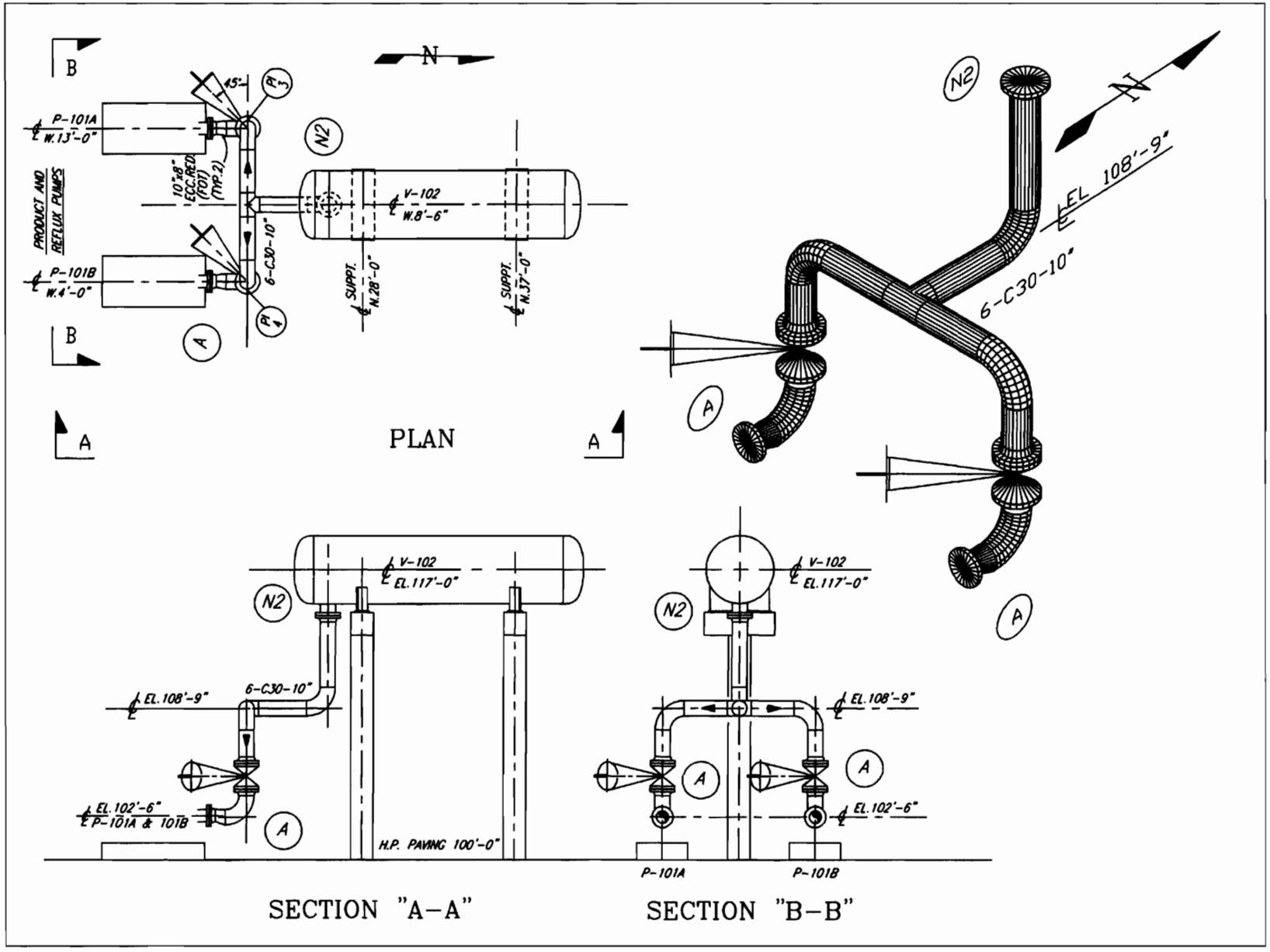

Figure 10-24. Lines 01-6-C30-10″.

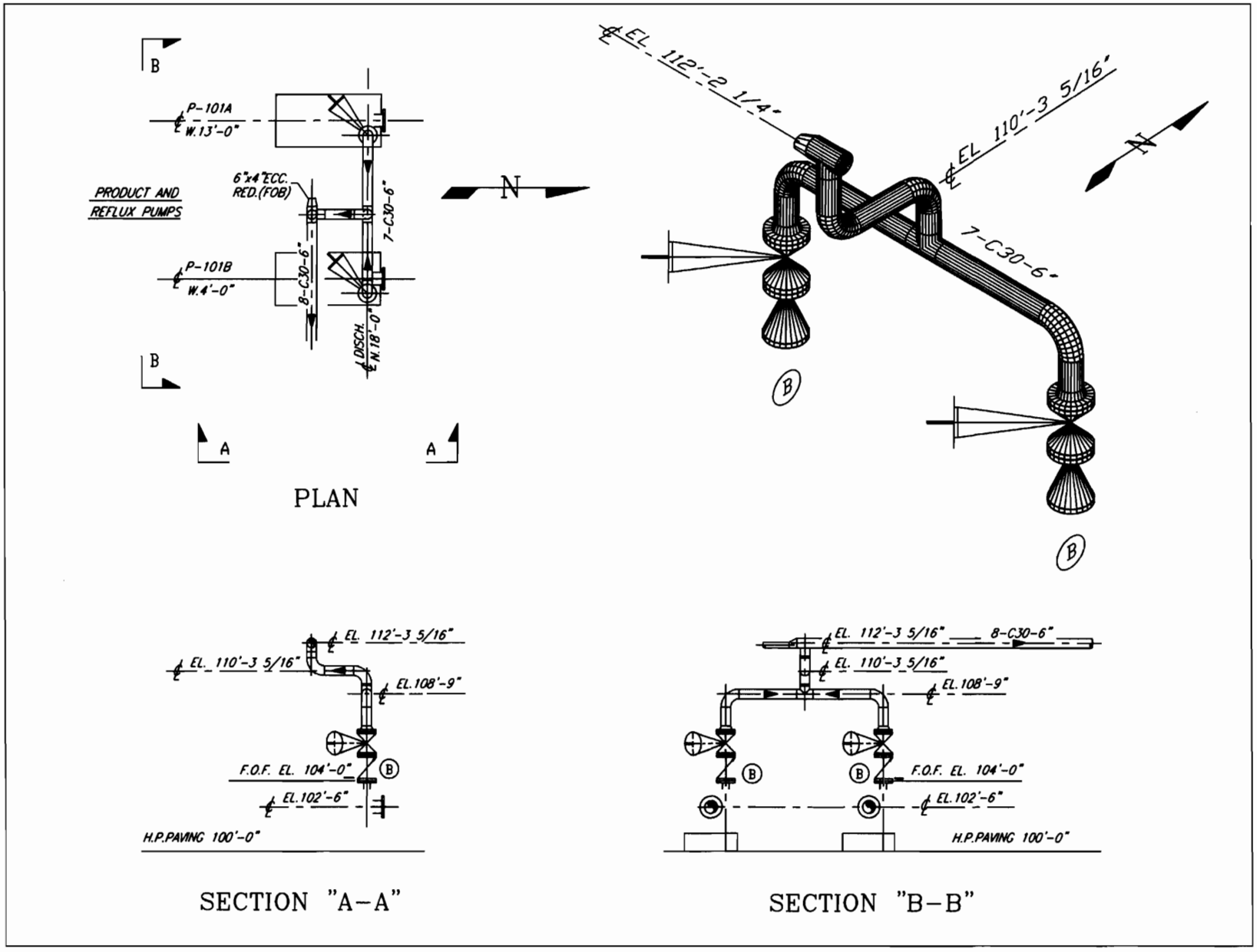

Figure 10-25. Line 01-7-C30-6″.

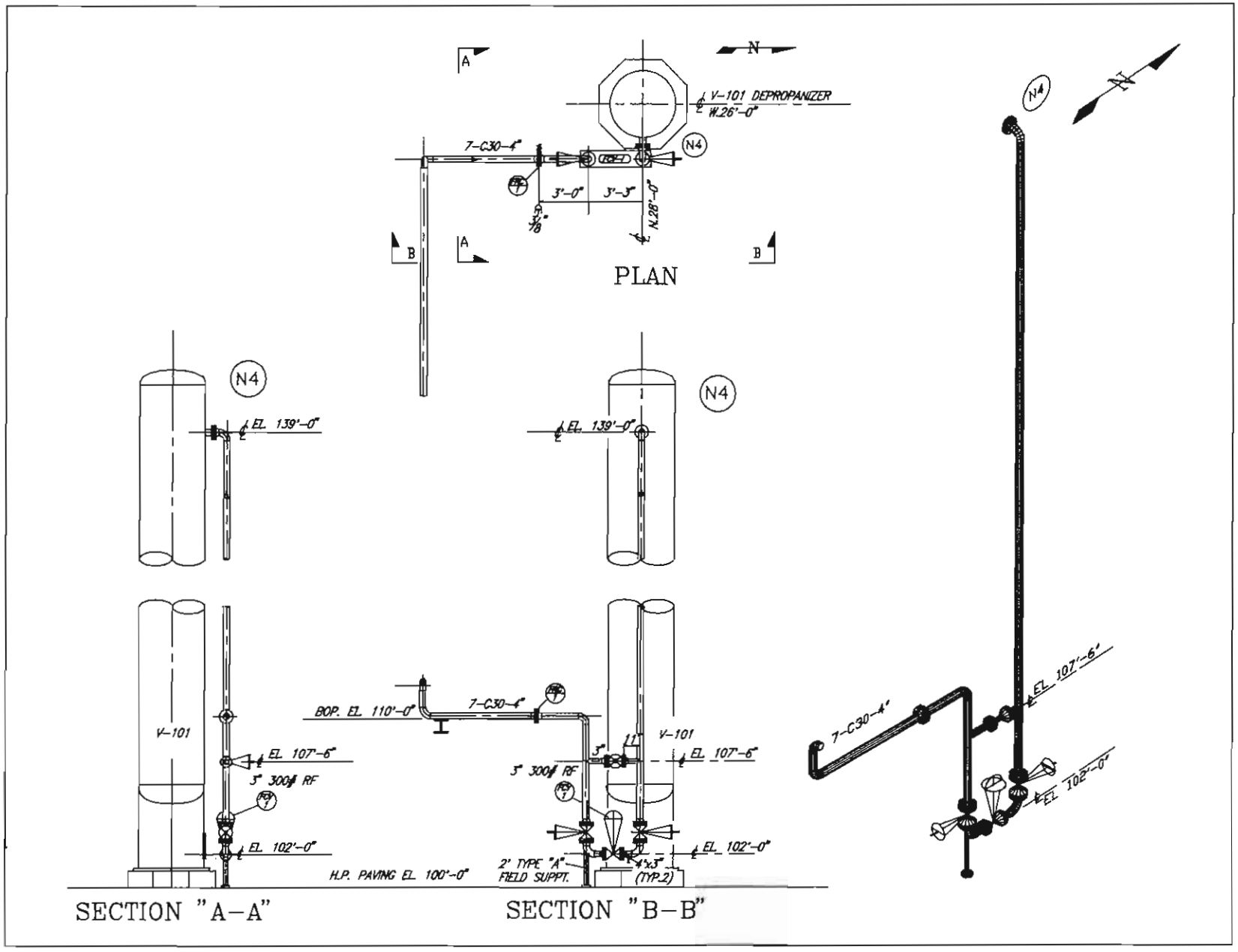

Figure 10-26. Line 01-7-C30-4".

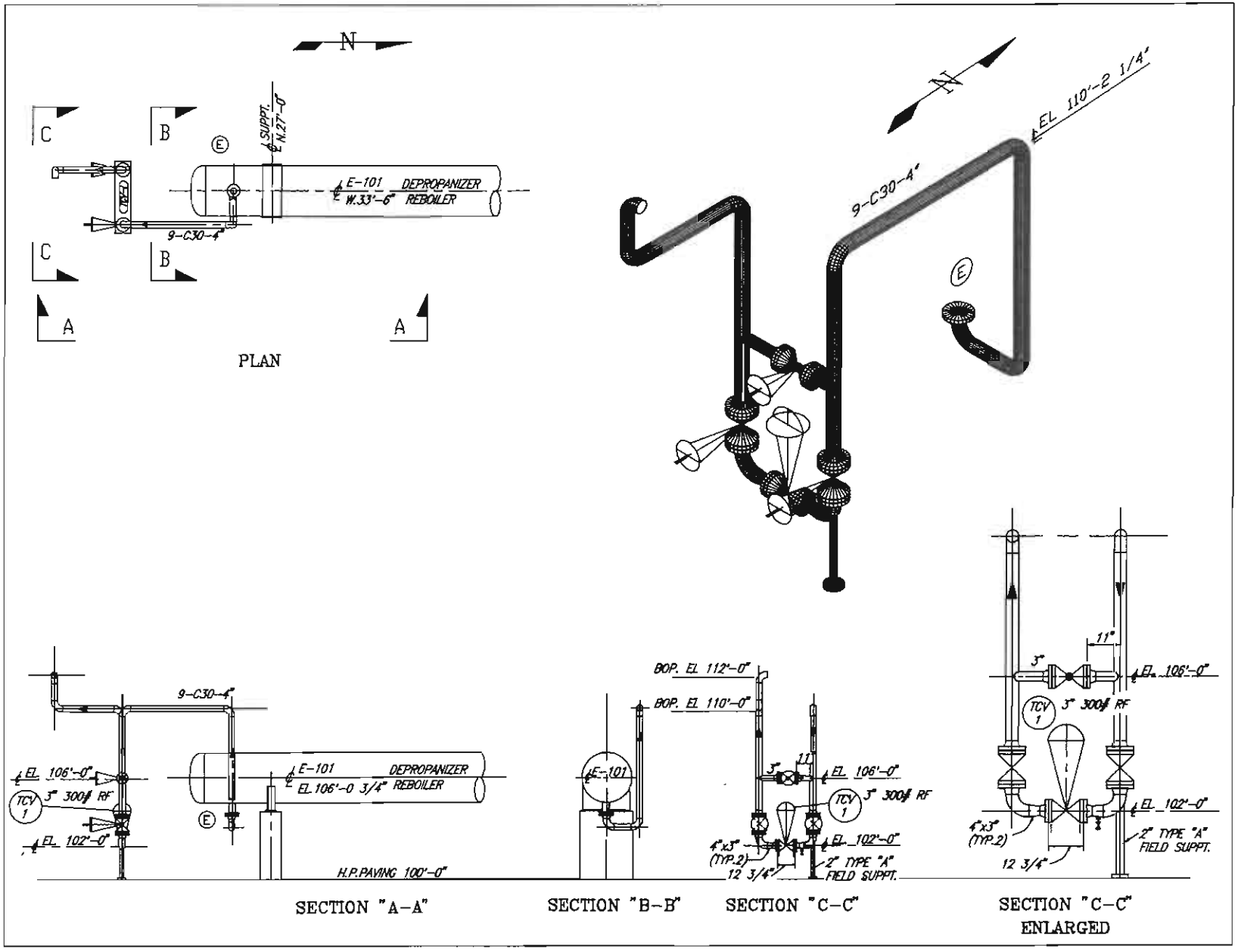

Figure 10-27. Line 01-9-C30-4".

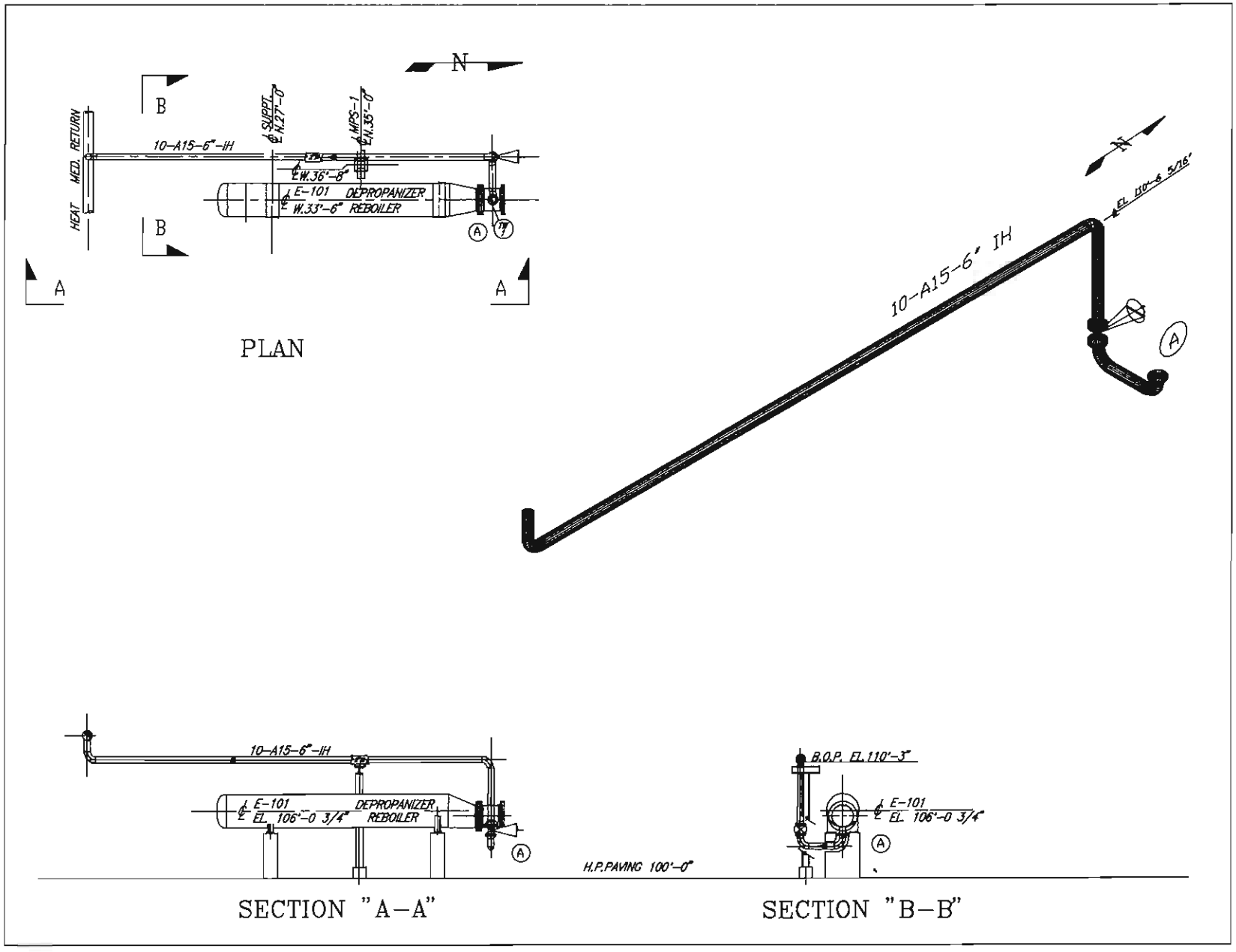

Figure 10-28. Line 01-10-A15-6" IH.

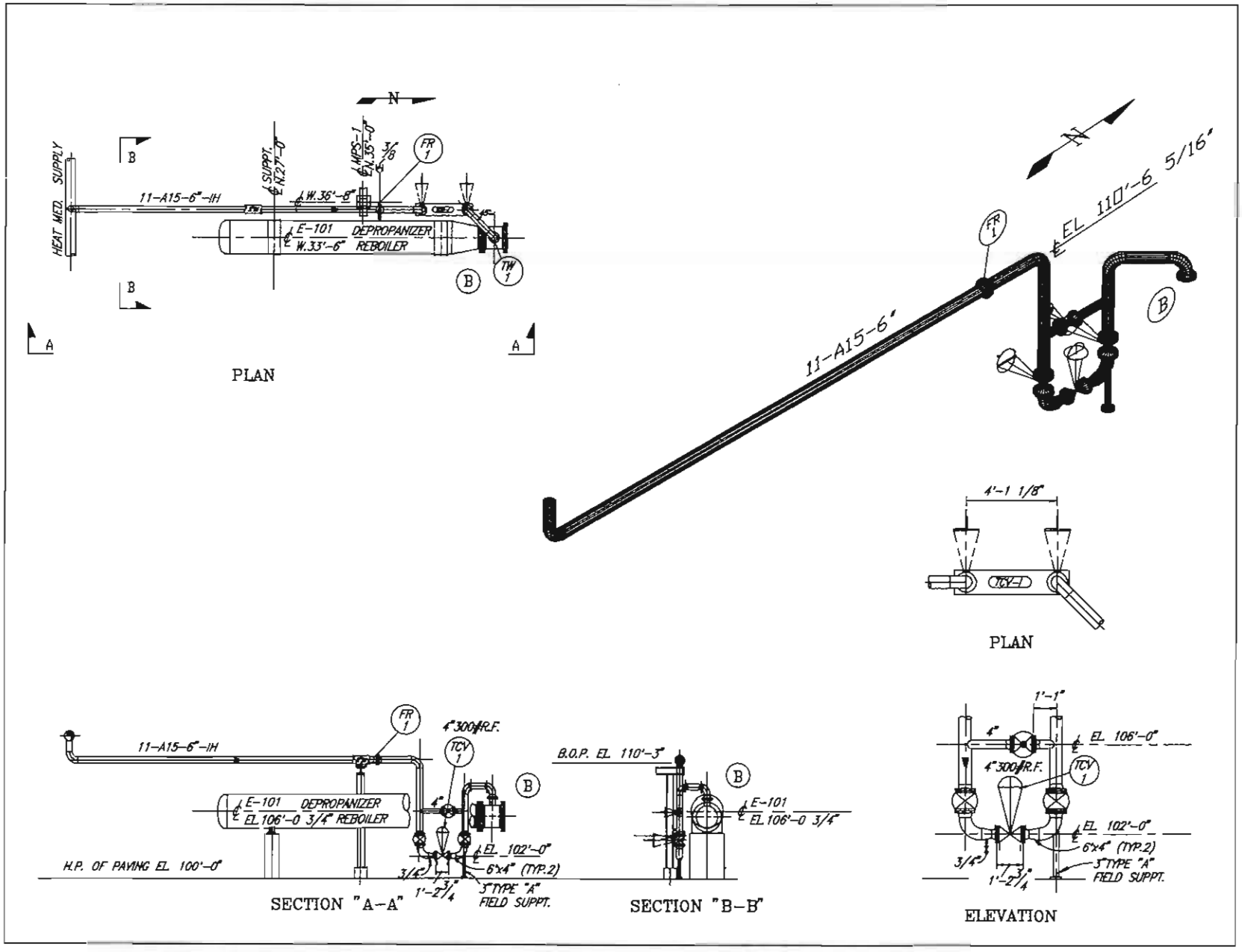

Figure 10-29. Line 01-11-A15-6" IH.

reheating. Both lines 01-10-A15-6″ IH and 01-11-A15-6″ IH are 6″ lines that branch from an 8″ header. To determine the type of branch connection to be made, we must follow piping specification A15. A15 mandates a stub-in must be used to make the branch connection on these lines. Notice these are liquid lines. The typical procedure for branching lines with a liquid commodity is to branch off of the bottom of the rack headers. If these lines contained steam, we would rise off the top of the header pipe to avoid getting condensate in the line.

As shown in Figure 10-30, line 01-12-C30-4″ rises fitting make-up off the top of V-102 from nozzle **N4** with an elbow turning west. Another elbow turning down routes the pipe through a control station. The control station is parallel to the centerline of V-102, traveling north/south. See Figure 10-27 for the measurements required to lay out the control station. The south end to the control station rises to a centerline elevation of 110′-2½″ and turns south. A dummy support is required to support this south run from a horizontal strut in the pipe rack. For further explanation of dummy support refer to Chapter 11. From the dummy support 01-12-C30-4″ turns up, then south again and drops into the 8″ fuel gas line in the pipe rack.

Line 01-13-A-15-6″, shown in Figure 10-31, is designed to transport waste gases from V-102 to the offsite flare stack. Line 01-13-A-15-6″ rises off the top of V-102. It begins at nozzle **N5** with a gate valve and a PSV. PSV-2 has a 4″-300# inlet and a 6″-150# outlet. The PSV routes the outlet line south, where it drops down to be supported on the 110′-0″ TOS horizontal strut. The line truns south again and rolls into the top of the 8″ flare header at a 45° angle to the east. The 8″ flare header then travels offsite to the flare stack.

Lines 01-14-A15-6″ and 01-15-A15-6″ are cooling water return and supply lines, respectively. They are used to circulate the cooling water between E-102 and the offsite cooling tower. Line 01-14-A15-6″ is the cooling water return line. This pipe will circulate the cooling water that has been heated in E-101 back to the cooling tower to reduce its temperature. 01-14-A15-6″ rises off the top of E-102 at nozzle **B** with a gate valve whose handwheel is oriented to the west. After a short vertical run out of the valve, the line turns east then south fitting make-up. The line travels below the pipe rack and turns up into the cooling water return header.

Line 01-15-A15-6″ is the cooling water supply line. It routes water that has been cooled in the cooling tower back to E-102. This line drops out of the bottom of the cooling water supply line in the pipe rack and turns north. When the pipe aligns with nozzle **A** of E-102, it drops down 9′-0$\frac{7}{16}$″ and turns west, then up into a block valve aligned with nozzle **B**. See Figures 10-32 and 10-33 for plan and elevation views of lines 01-14-A15-6″ and 01-15-A15-6″.

Line 01-16-C30-2″ is a short drain line dropping out of the bottom of V-102. This 2″ line is attached to nozzle **N3** and drops straight below the nozzle into a drain funnel. A block valve is located at centerline elevation 104′-6″. Its handwheel is oriented to the east (see Figure 10-34).

The level gauges and level controllers depicted in Figures 10-35 and 10-36 are mounted on a bridle attached to vessels E-101 and V-102 respectively. The level gauge and level controller are installed so an operator can easily monitor and control the normal liquid level of each vessel. The normal liquid level of V-102, the overhead accumulator, is typically the centerline of the vessel. The normal liquid level of E-101, the kettle reboiler, is usually one-half the weir height. The weir is a vertical plate inside the kettle reboiler that serves as a dam to keep the tube bundle submerged under liquid. As the liquid level increases, the excess liquid will flow over the weir and be drawn out through nozzle **E**, which is line 01-9-C30-4″.

Procedure 9: Platform, ladder, and cage layouts

Reference drawing: Vendor drawings

Whether using manual or **AutoCAD** applications, the size and location dimensions for the platforms, ladders, and cages are established from dimensions provided on the vendor drawings for V-101. Figures 10-37 and 10-38 provide an enlarged view of V-101 describing platforms 1 and 2, respectively. Use dimensions provided in these figures to place the platforms, ladders, and cages on V-101 in your piping arrangement drawing.

Procedures 10-15: Placement of line numbers, callouts, coordinates, and dimensions

Reference drawing: Flow diagram, pipe line list, job specifications

Key information about a piping facility is not always depicted graphically. Some information must be communicated in written form. Certain components of a drawing such as dimensions, coordinates, elevations, line numbers, fitting and equipment callouts, and design and fabrication notes can only be represented as written information. The arrangement of information and reference notes on an arrangement drawing usually requires preplanning and proper placement to achieve a good sense of balance on the drawing. This information must be arranged logically and in a clear legible manner. Therefore, interferences among reference notes, dimensioning, and object line work must be kept to a minimum.

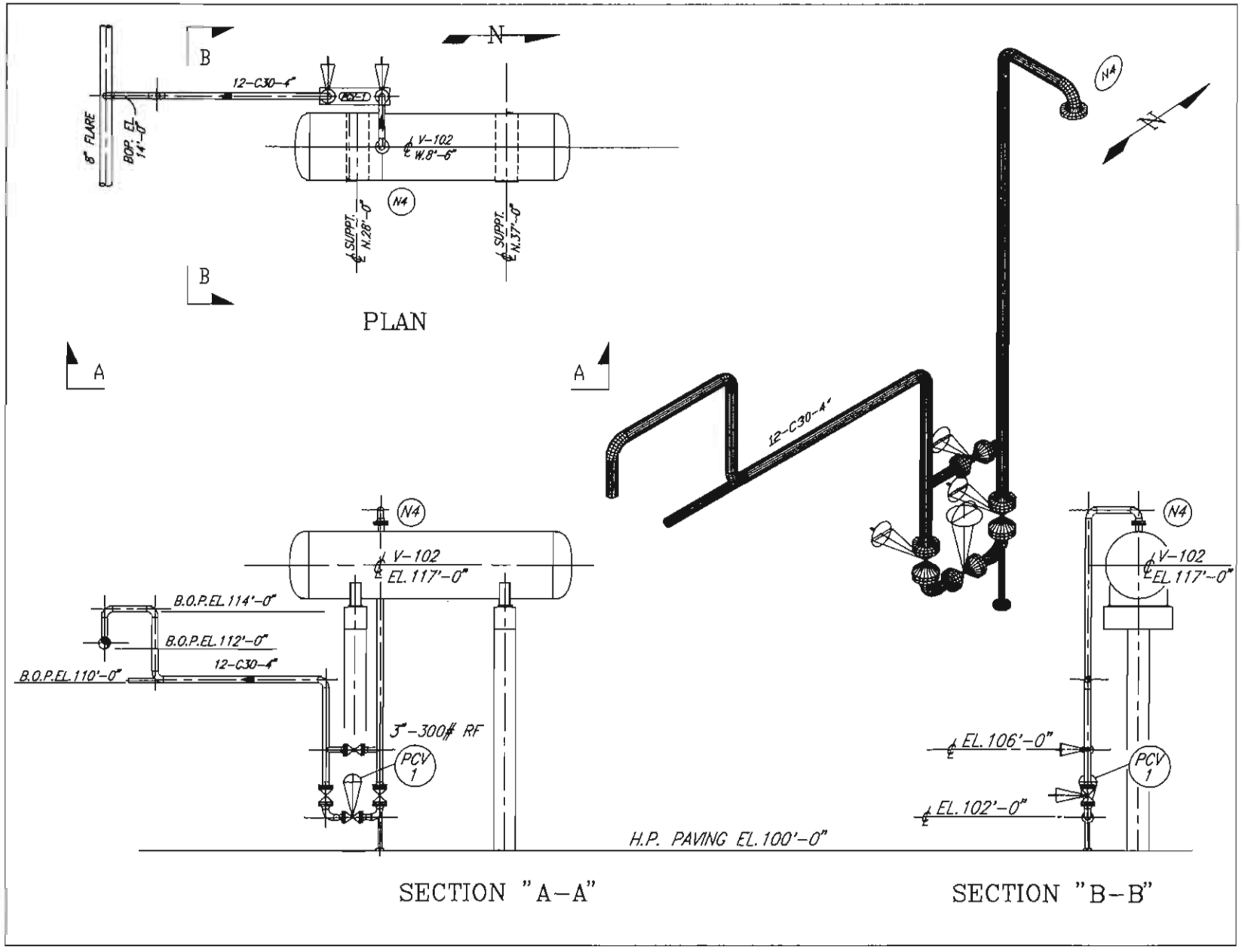

Figure 10-30. Line 01-12-C30-4".

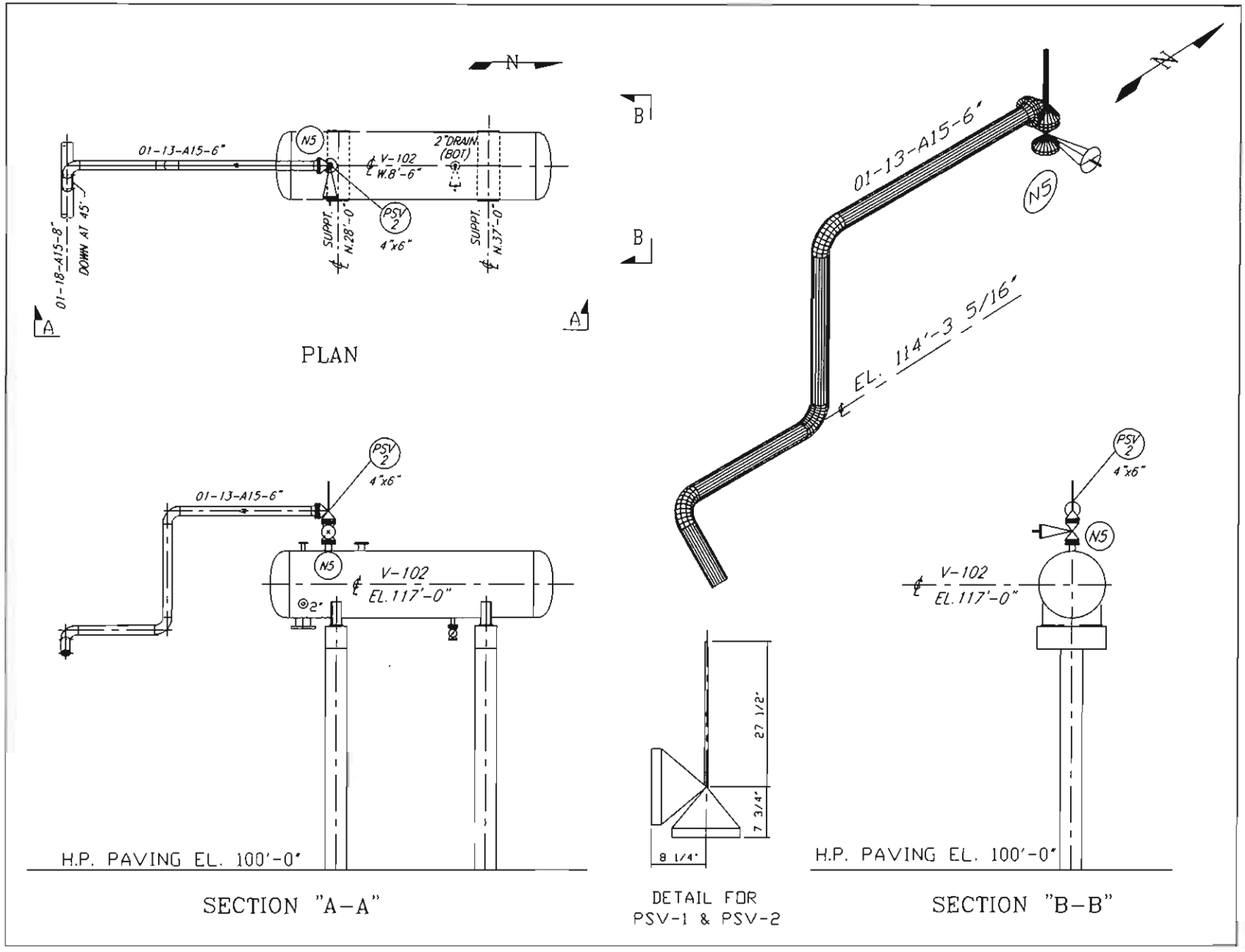

Figure 10-31. Line 01-13-A15-6".

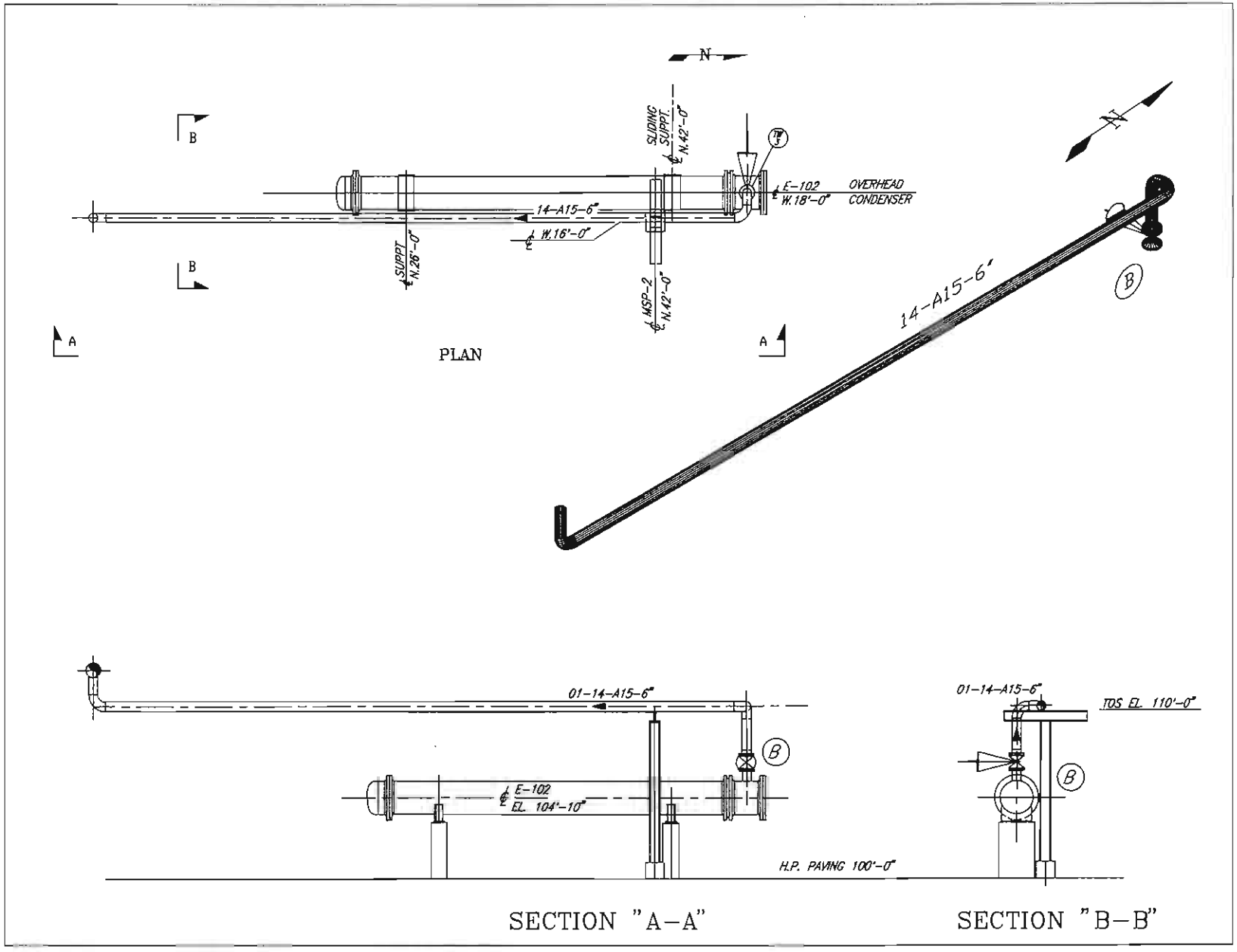

Figure 10-32. Line 01-14-A15-6".

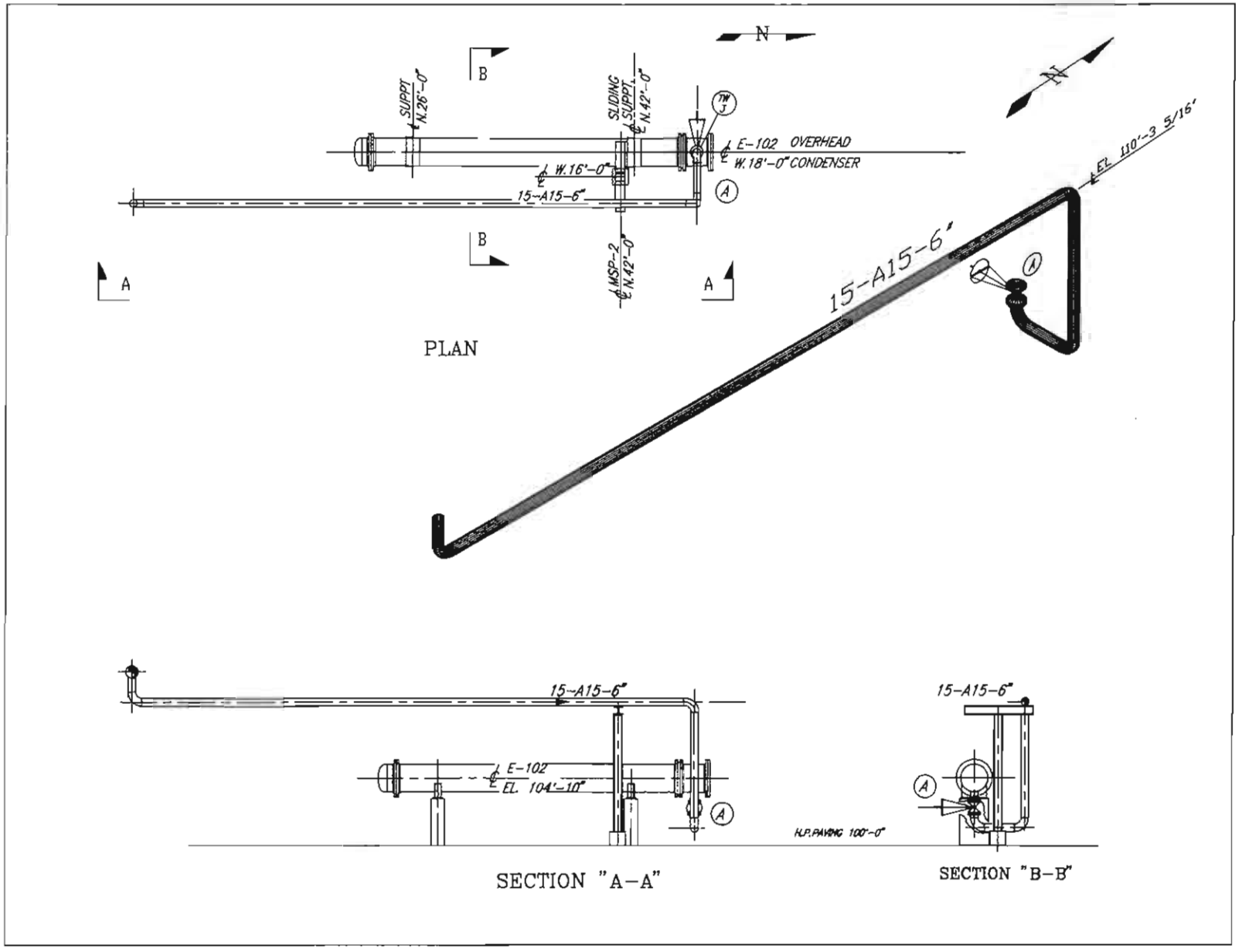

Figure 10-33. Line 01-15-A15-6".

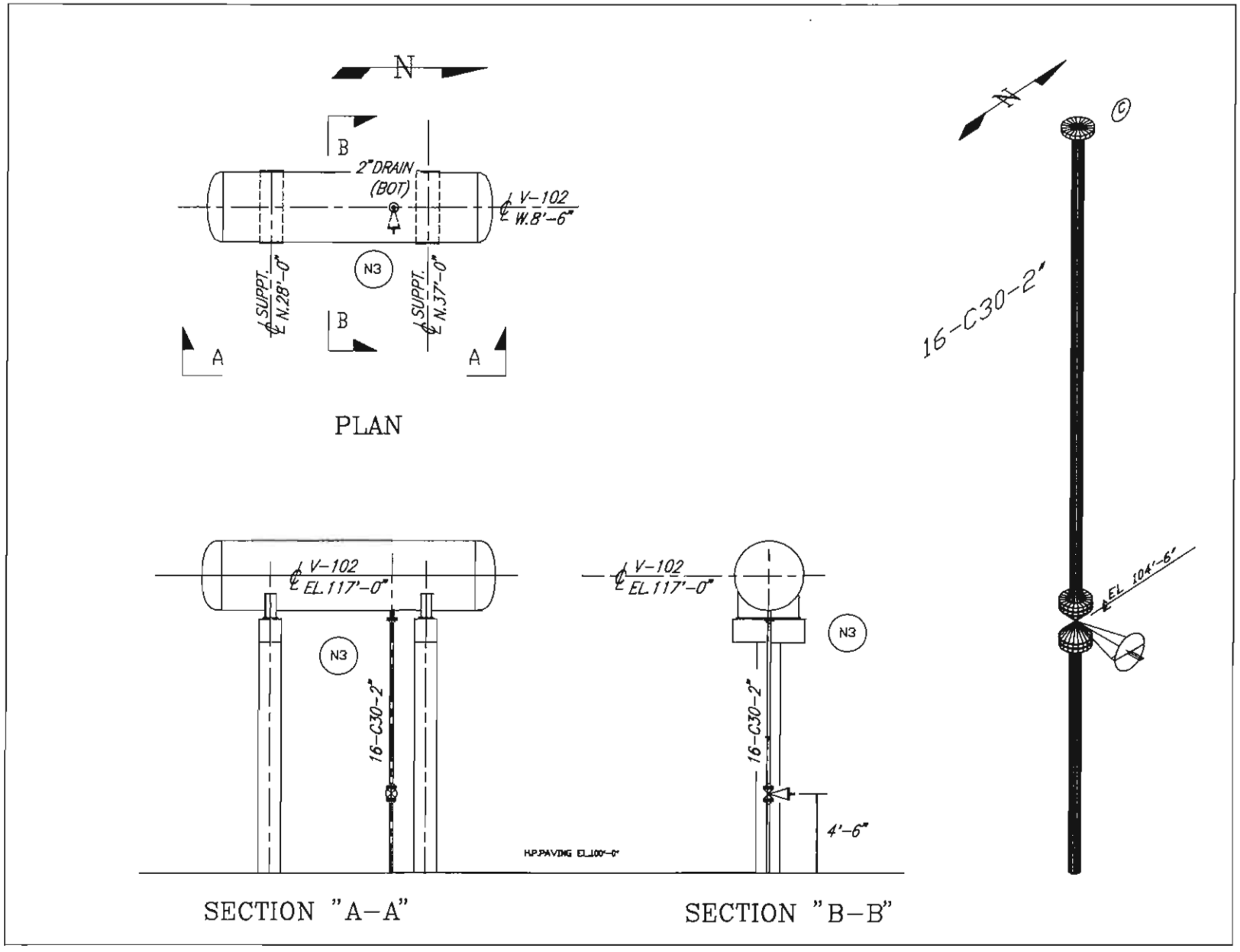

Figure 10-34. Line 01-16-C30-2".

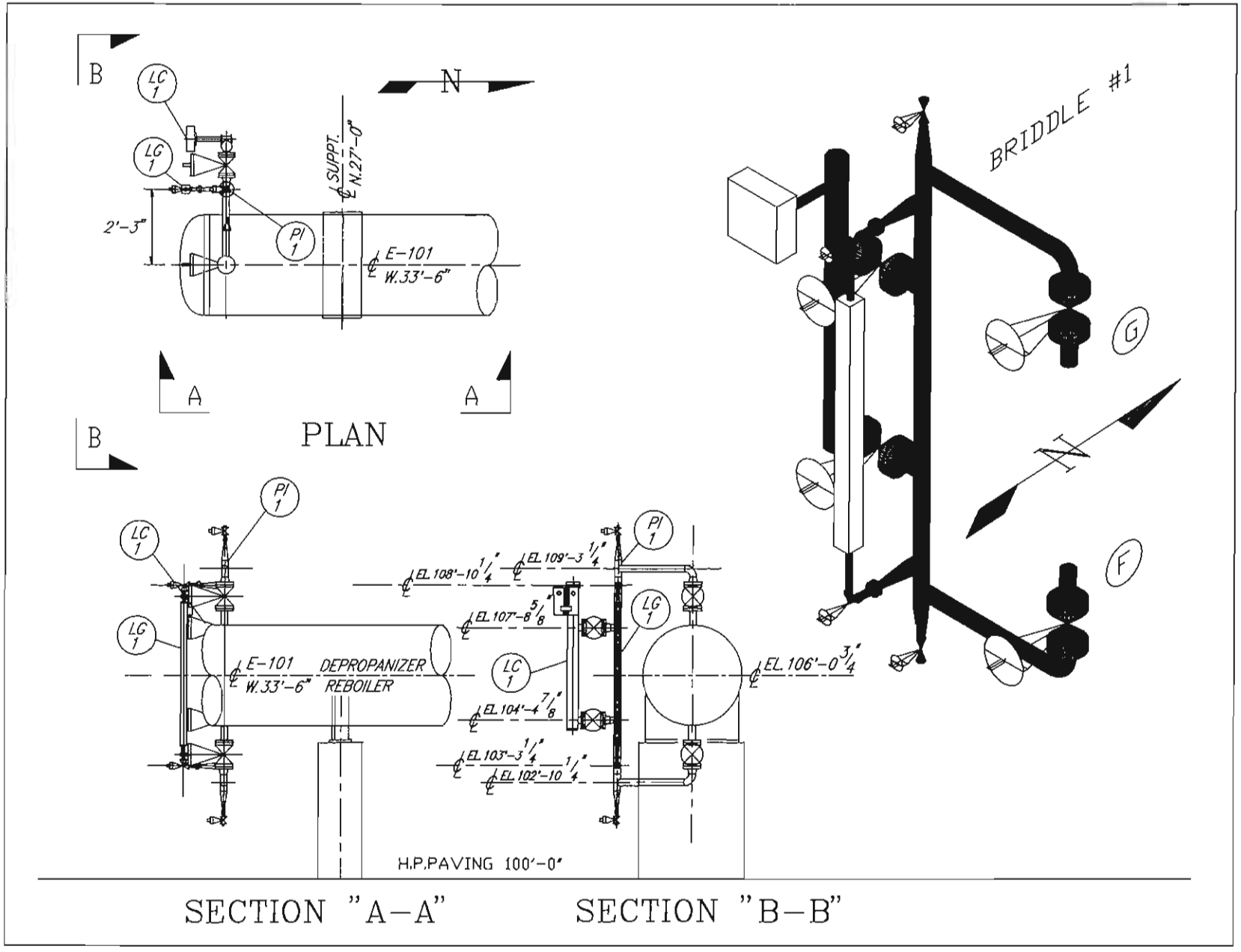

Figure 10-35. Briddle attachments for E-101.

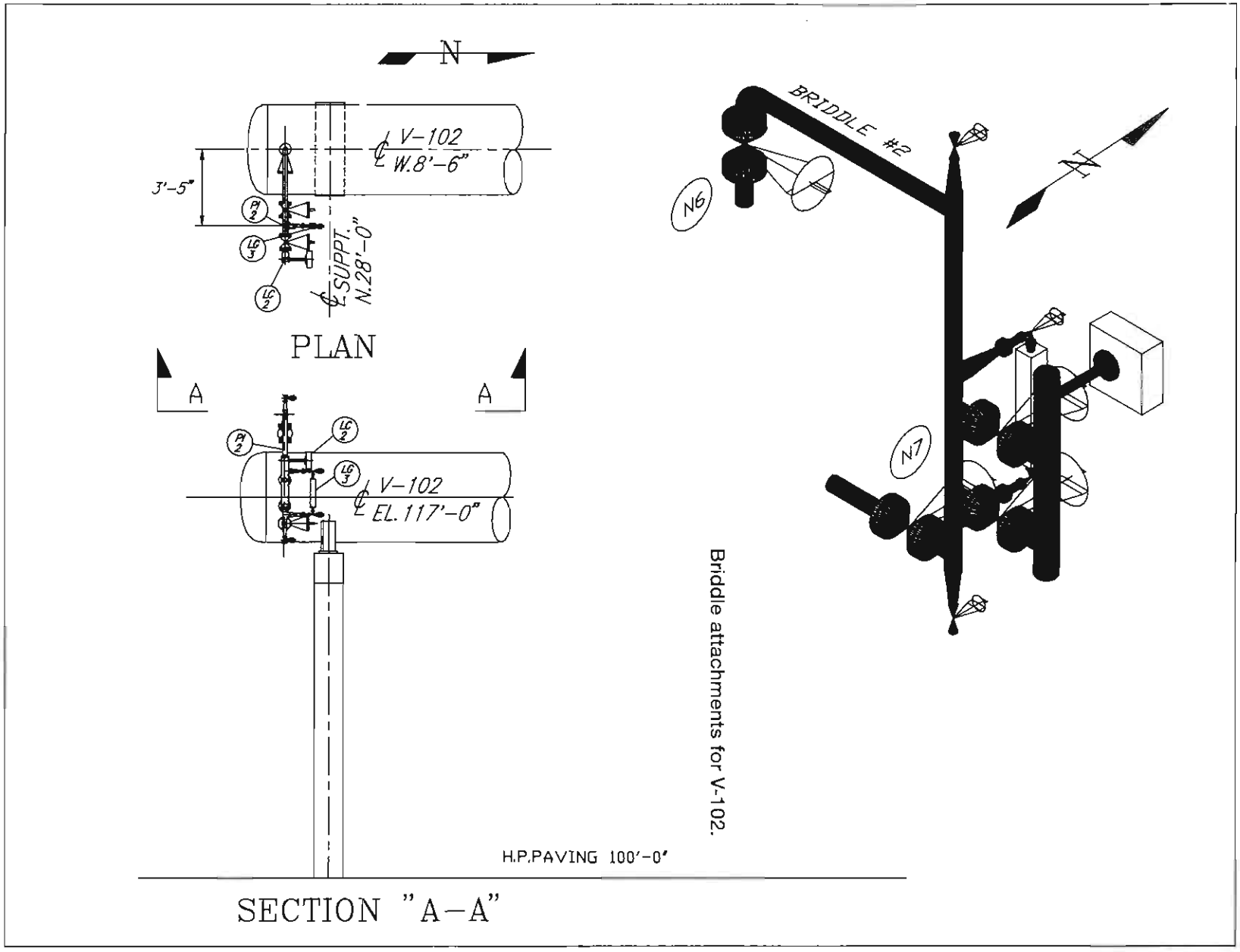

Briddle attachments for V-102.

Figure 10-36. Briddle attachments for V-102.

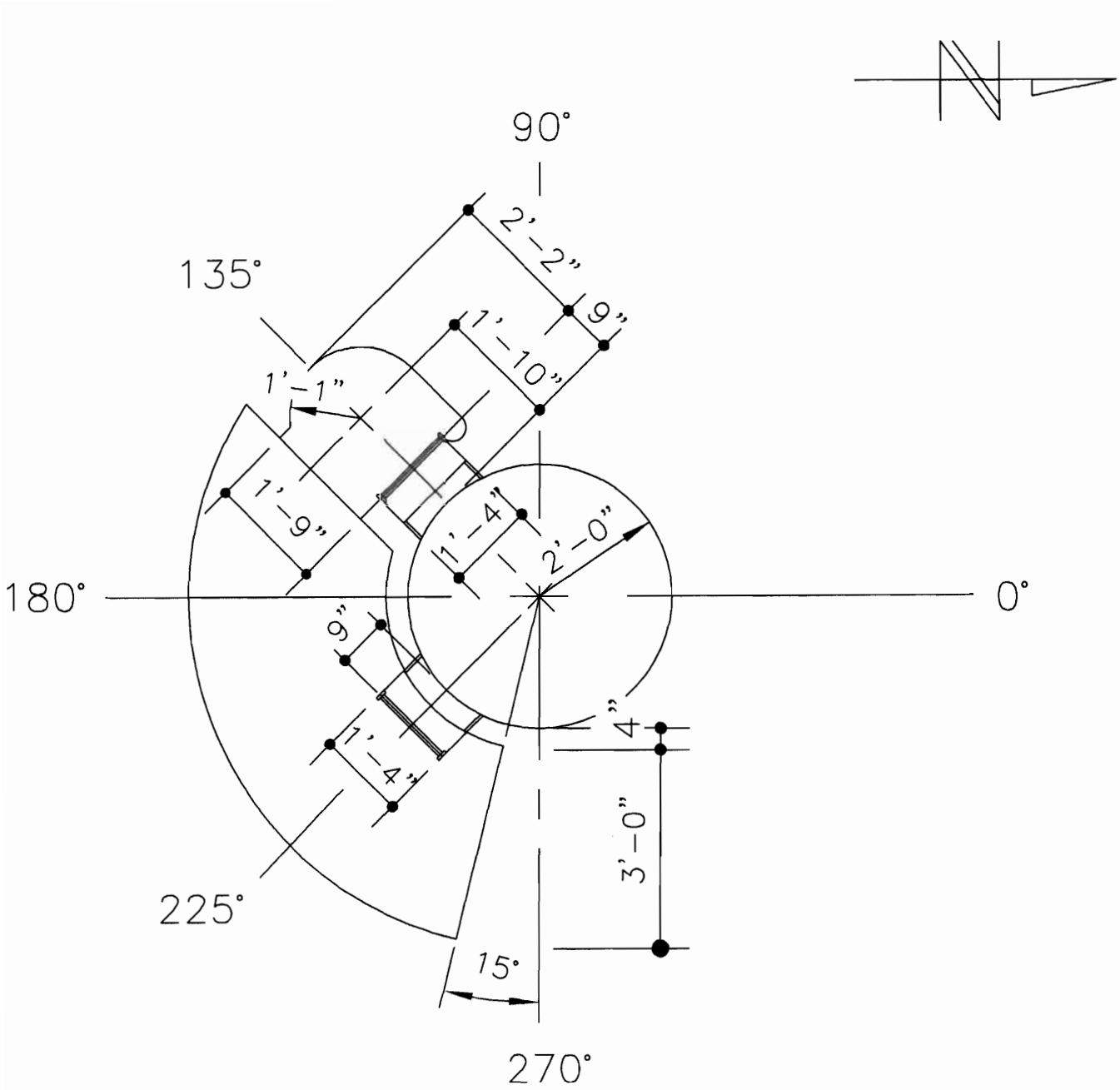

Figure 10-37. Platform No. 1.

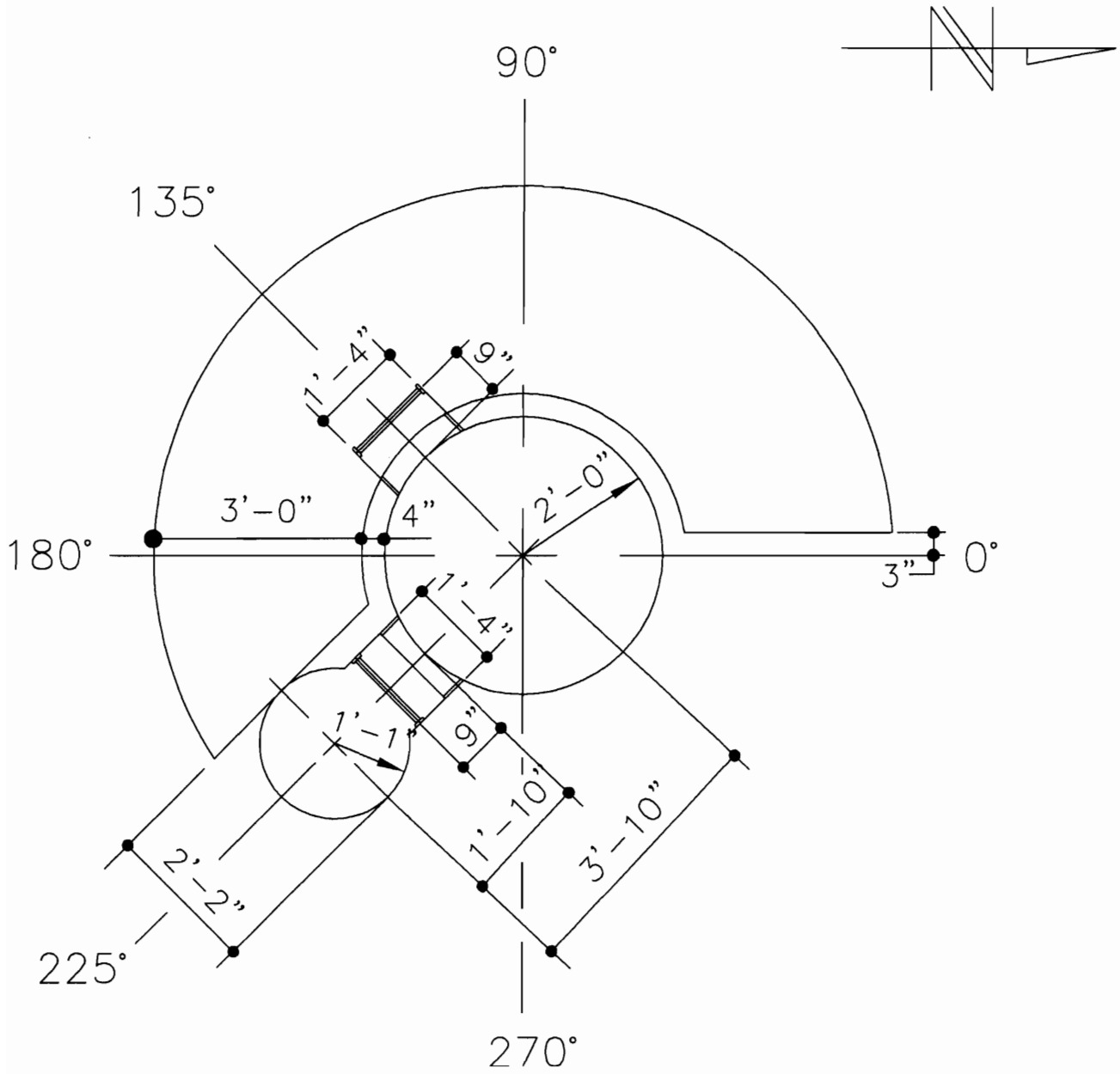

Figure 10-38. Platform No. 2.

The following items must be included on piping arrangement drawings:

- Completed title block information.
- North arrow. Place the north arrow in the upper right corner of the drawing. It should point up or toward the right.
- Coordinates for match lines, area limits, battery limits, equipment, and structural support foundations, all pump suction and discharge nozzles.
- Labels for angular degrees of orientation (30°, 45°, etc.) to indicate orientation of all vertical vessel nozzles.
- Tag numbers (N1, N2, N3, etc.) for all nozzles on equipment that corresponds to the vessel outline drawings, equipment vendor drawings, and nozzle schedule.
- Show Equipment item numbers and title information.

  NOTE: To avoid congestion on drawing, extend centerlines away from equipment and provide equipment description and coordinates in an open area of the drawing.

- Labels for all pipelines with the following information:
  Line number
  Flow direction
  Insulation symbol and thickness
  Steam, heat, or electrical tracing if required
- A reference note somewhere within the area limits of the piping plan drawing to indicate the finished grade or high point of paving elevation.
- Label for all instrumentation per the mechanical flow diagram. All instrumentation should be accounted for one time in either the plan view or section view. Use ½″ diameter instrument bubble.
- Label for the top of platform (TOP) elevation on plan drawing.
- Reference notes to describe the following:
  Piping specialty items
  Reducers and reducing tees
  Out of spec flanges
  Any nonstandard item not covered in piping spec
  Vessel davits
  Chain operators for valve handwheels
  Pipe guides, supports, anchors, hangers
- Cutting plane callouts that identify the name and direction of the section or elevation to be drawn.
- Labels for lines running through a pipe rack to specify the commodities they contain.

  NOTE: For clarity and neatness, group similar callouts together in one common location where possible (see Chapter 11, Figure 11-2).
- Identification for any miscellaneous items. Locate and describe as required.

As a general rule, drawing notes and callouts are drawn .125″ tall. When the drawing is created full scale, as with **AutoCAD**, text height should be a minimum of 4″ tall. When plotted to ⅜″ = 1′-0″ scale, the result would be text .125″ tall. All notes should be read from the bottom of the drawing. Information such as coordinates for match lines, area limits, battery limits, line numbers, equipment callouts, coordinates, and elevations should be labeled parallel to the item to which they apply. This may result in notes being read from the bottom or the right side of the drawing.

DIMENSIONING

Developing drawings with a high degree of dimensional accuracy is of primary importance. Good dimensional arrangement and placement enhances a drawing's effectiveness. Clear, concise, well-placed dimensions not only reflect a well-thought-out drawing, they simplify communication, which minimizes checking and reduces drawing revisions.

Dimensioning Guidelines

When placing dimensions on a drawing, either manually or with **AutoCAD,** apply the following guidelines to maximize the use of the limited space on a drawing. General dimensioning guidelines include:

- Avoid duplication of information. Do not repeat dimensions or notes in each view of a piece of equipment.
- Dimensions on plan drawings are to be placed within the drawing's limits, i.e., match lines, drawing limits, area limits, battery limits, etc.
- Dimension lines should be in a continuous string. Avoid staggered or offset dimensions.
- Group dimensions outside of a detailed area, where possible. Avoid crossing elements of the drawing with dimension or extension lines.
- Avoid placing dimensions between coordinates.
- Place dimensions for horizontal lengths on a plan drawing. Dimensions for vertical lengths should be shown on sections or elevations.

- Dimension all piping from centerline to centerline, centerline to face of flange, or face of flange to face of flange; do not dimension to welds.
- When required, include gasket thickness in dimensions. Indicate gasket location relative to flange extension lines with gasket symbol.
- Provide spacing dimensions for lines in a pipe rack. Do not place a continuous string of dimensions across a pipe rack if pipe rack column coordinates are provided.
- Indicate TOS or BOP elevation of lines in the pipe rack.
- Dimensioning should be minimal. Provide only those dimensions, coordinates, and elevations required to draw and check piping isometrics or spools. Avoid referral to other drawings such as vessel drawings, vendor drawings, plot plan, etc.
- Show all angular offsets. Indicate degree of offset and plane direction (horizontal or vertical).

Procedure 16: Checking your work

Reference drawing: All available information and drawings

Now that the drawing is complete, it must be reviewed carefully. A blueprint or plotted copy of the drawing will be required. If the drawing was created manually on vellum, mylar, or other reproducible medium, a blueprint must be obtained. If the drawing was developed on a computer, a copy of the drawing must be plotted. Although the drawing will be thoroughly checked by your instructor or supervisor for completeness and correctness, a drafter should always review the drawing to check for any errors, deletions, or inaccuracies. It may be necessary to systematically review the layout procedure in one's mind to duplicate the sequences used to develop the drawing.

Equipment location and size should be verified. Fitting and flange dimensions must be confirmed and valve handwheel orientations must be reviewed. It is also the drafter's responsibility to assure the drawing was developed in accordance to any and all client or company specifications and governing federal regulations.

Procedure 17: Drawing release

Once you have checked and corrected your drawing, it is customary to indicate the "Completed Date" in the drawing title block. Some companies may also require that a drafter initial the drawing as an affirmation this is his or her work. Run a new blueprint or plot a new copy of the drawing to provide to your instructor or supervisor. The drafter may also elect to make an additional copy of the drawing to use as future reference.

PIPING SECTIONS AND ELEVATIONS: WHAT ARE THEY?

As previously mentioned, plan view drawings, such as the piping arrangement drawing, provide horizontal dimensions that establish a facility's width and depth measurements. An occasional note or callout is the only reference to height measurements found on plan drawings. To supply more detailed information on height measurements, drawings called *sections* and *elevations* are developed. Height is the most important dimension on section and elevation drawings. Although these two terms have come to have synonymous meanings they are conceptually different.

The word *elevation* has a literal meaning of "height above sea level." Both sections and elevations provide height measurements from an object to the ground (grade). The primary difference is that elevation drawings provide a view of the exterior features of a facility, while section drawings represent interior components of a facility that may not be visible from an exterior viewpoint. Comparing this to the features of a house, an elevation represents what the house looks like from the street, while a section might show how the furniture in a room is arranged, what type of wallpaper is on the walls, how many pictures are hanging on the walls, or how much attic space is provided above the ceiling.

Elevation Types

Section and elevation drawings are the standard on which vertical measurements for foundations, platforms, steel supports, nozzles, and centerlines for equipment and pipe are shown. As mentioned in Chapter 9, Coordinates and Elevations, the ground, or grade, is often given an arbitrary value called a *datum elevation*. Since the use of the exact height above sea level dimension is not practical, a datum elevation of 100′-0″ is typically used. All height dimensions are measured from this 100′-0″ setting and are assigned elevation names to describe their type and location. Elevation names for items above grade can appear in various forms, such as centerline (℄), top of steel (TOS), top of concrete (TOC), bottom of pipe (BOP), or face of flange (FOF or F/F). Elevation names for items below grade are referred to as *invert* (INV) elevations. The obvious need for the drawing of sections and elevations is to show piping tie-ins to equipment, calculate lengths for vertical piping runs, check for interferences, make sure lines are properly supported, verify worker and operator access clearances, and establish

sufficient overhead clearance required for equipment installation, maintenance, or removal.

Where to Begin?

Sections and elevations come from the piping arrangement drawing. Once buildings, equipment, and structural support foundations have been established and pipe, fittings, valves, and instrumentation have been represented on the plan view drawing, some indication of what to draw is needed. The cutting plane callout is such an indicator. The cutting plane callout resembles a large letter **L** with an arrowhead on one end. The direction the arrowhead points indicates the direction from which the facility is being viewed. This point of view is the direction from which the section or elevation view is drawn. See Figure 10-39 for the use of cutting plane callouts. Notice the callout is labeled to make referencing between the plan and section or elevation views possible.

Depending on the direction from which the facility is viewed, only one horizontal dimension, either width or depth, is required to locate equipment, foundations, pipe racks, etc. on an elevation drawing. This is unlike plan view drawings that require two intersecting coordinates to locate items. Coordinates for match lines, area limits, and battery limits taken from the piping arrangement drawing are used to establish boundaries on the right and left sides of section and elevation drawings. With only one locating coordinate, equipment can be positioned from the right or left drawing boundaries. It is recommended that all locating measurements be made from either the right boundary or left boundary to avoid misplacement of equipment and other components. Figure 10-40 shows how alignment of the plan and elevation views can make coordinate location quicker by projecting width measurements from the plan view down into the elevation view.

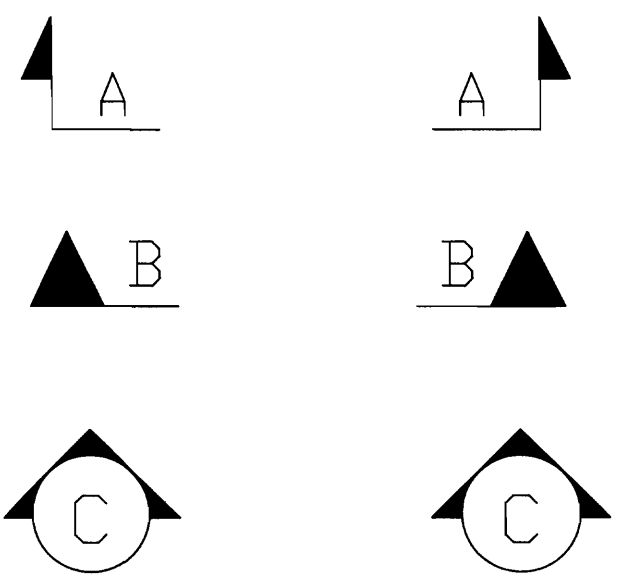

Figure 10-39. Cutting plane callouts.

Vendor drawings are used to establish sizes of equipment. Nozzle schedules and dimensioning charts provide location, size, and pound ratings for equipment nozzles and their mating flanges. Pipe routings, fitting rotations, and handwheel orientations on the arrangement drawings are interpreted and rendered accordingly on the elevation. Although fitting, flange, and valve symbols are the same for plans, sections, and elevations, the rotation and orientation of the symbols will vary. Representation of an elbow that turns down on a piping arrangement drawing will be drawn differently when viewed from above than when viewed from the side as in an elevation drawing.

DETAIL DRAWINGS

Although a simple note or callout can be sufficient in conveying information to a reader, an actual drawing representation will provide much more detailed information. One case in point is the **TOS** callout. Known to mean *top of steel*, this note, and others like it, is the only way of representing height on a plan view drawing. But on a section or elevation drawing, the actual structural steel member can be drawn to provide a graphical representation to the reader. By rendering, height measurements become easily recognizable. Headroom clearances, pipe support spacing, and possible interferences become self-evident. Figure 10-41 shows a typical elevation of the piping facility.

The following guidelines should be used when placing callouts on section or elevation drawings;

- Provide top of steel (TOS) elevations of all pipe supports.
- Include centerline elevations of exchangers and horizontal vessels.
- Specify top of concrete (TOC) or grout elevations for all equipment foundations.
- Provide centerline elevations of horizontal nozzles on equipment, including piping and instrumentation nozzle connections.
- Label face of flange elevations for nozzles attached to the top or bottom of vertical vessels, exchangers, and suction and discharge nozzles on pumps, turbines, and compressors.

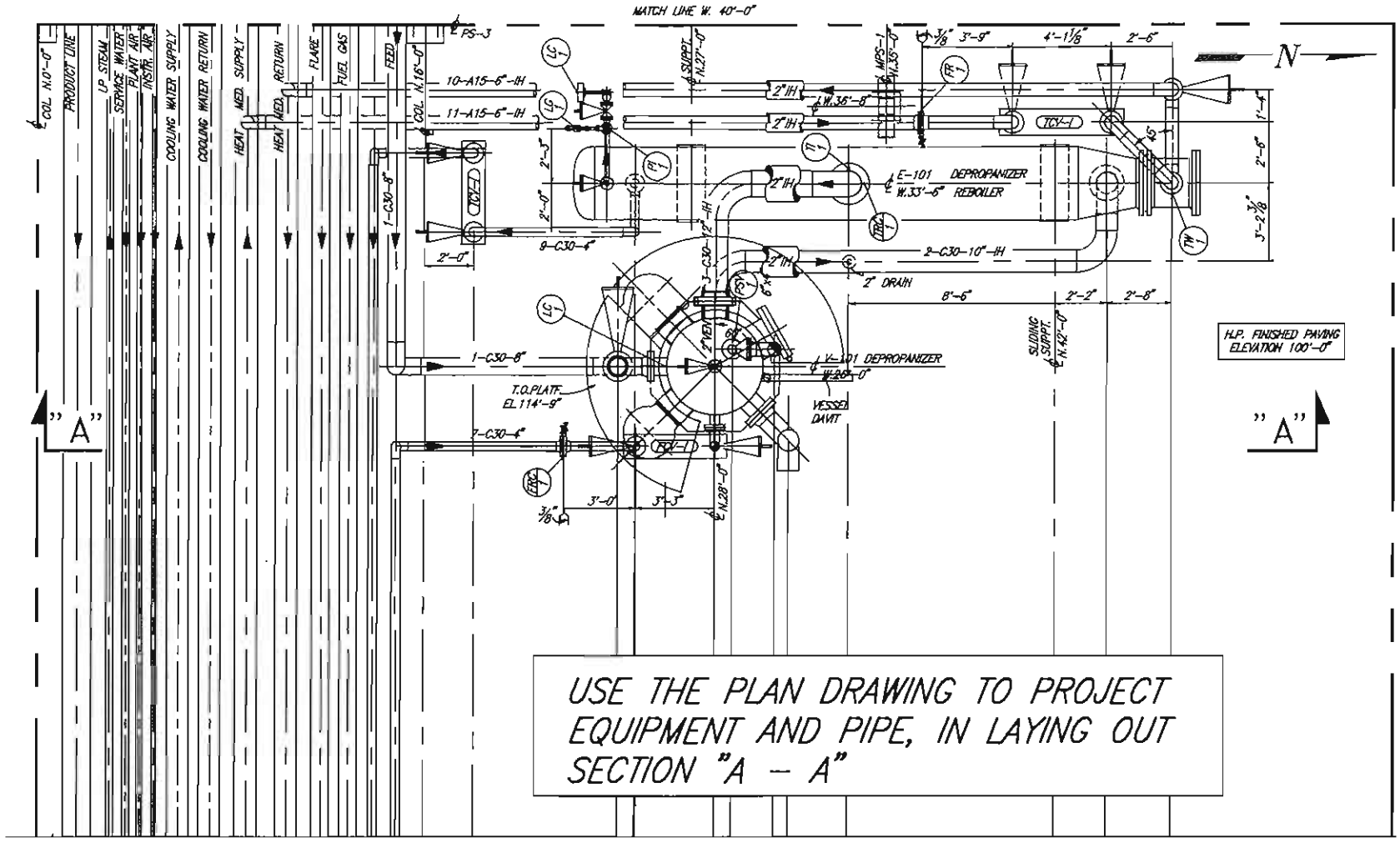

Figure 10-40. Projection of coordinates.

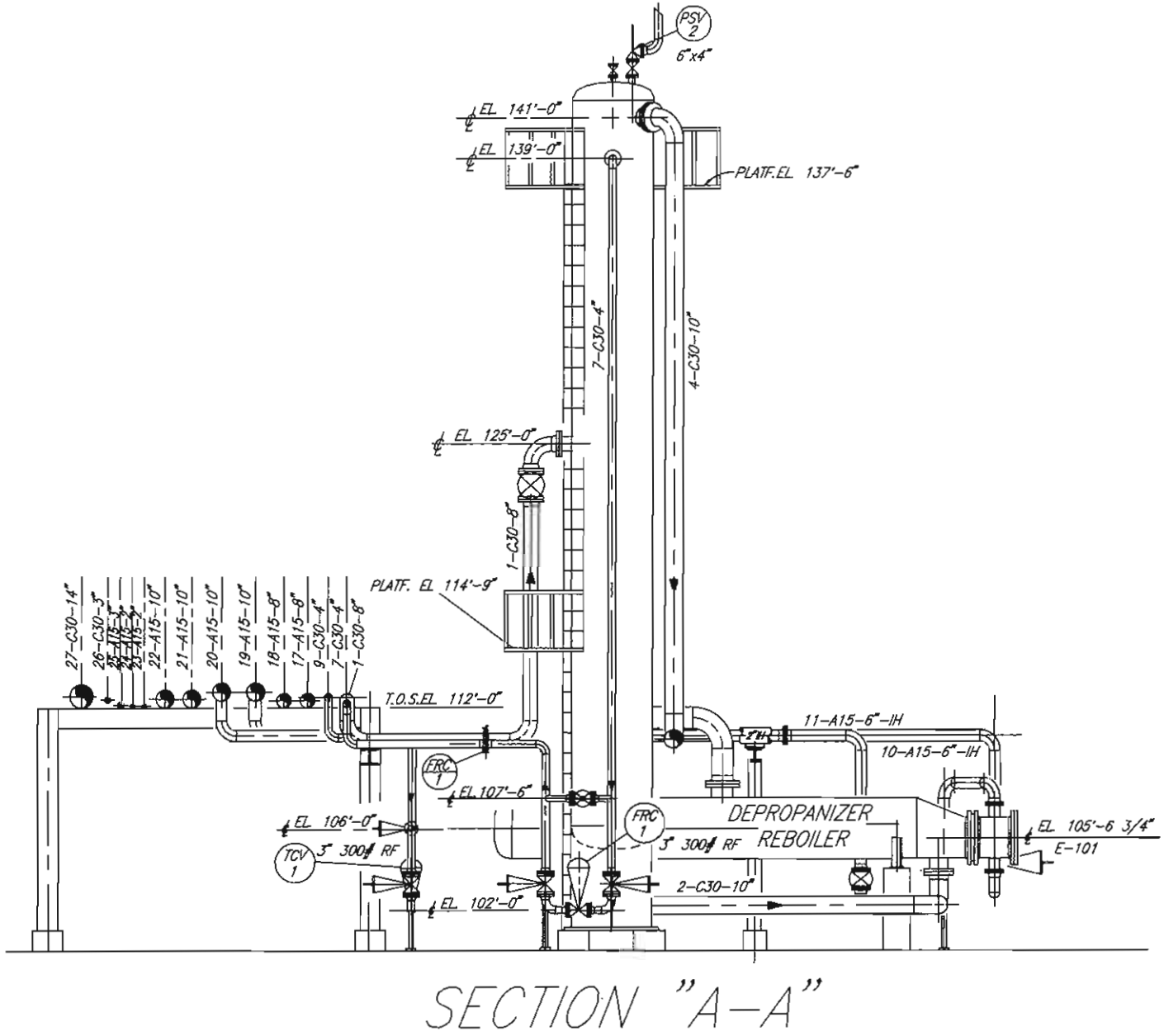

Figure 10-41. Elevation view.

- Indicate high point of finished grade (datum elevation).
- Mark top of grating or plate on platforms.
- Include bottom of pipe (BOP) elevation for pipelines on shoes.
- Provide centerline elevation of relief valves.

The following list contains some DON'TS relating to the dimensioning of plan, elevation, or section drawings.

DO NOT

- Dimension from underground lines to aboveground lines.
- Dimension from lines running at one elevation to lines running at a different elevation within pipe racks or other areas.
- Dimension to the center of a valve, except with small bore screwed or socket-weld valves.
- Dimension piping from electrical cable trays, conduit, or instrument tray runs.
- Dimension internal equipment piping to external piping.
- Dimension piping from outlines of buildings, structures, or equipment.
- Dimension "fitting make-up" installations.
- Dimension the lengths of standard piping components such as elbows, tees, reducers, etc.

CHAPTER 10 REVIEW QUIZ

1. What is a piping arrangement drawing?

2. What is a nozzle schedule?

3. Name five reference drawings or documents needed by a piping designer to lay out the piping arrangement drawing.

4. What is the typical scale used to create manual piping drawings?

5. What is the typical scale used to create CAD piping drawings?

6. Which drawing is used as a reference drawing when locating centerlines for pipe racks and equipment foundations?

7. What is the standard height of text used on piping drawings?

8. Explain the difference between section and elevation views.

9. Define datum elevation.

10. What is the most important measurement shown on section or elevation drawings?

EXERCISES: PLANS, ELEVATIONS, AND SECTIONS

Chapter 10 Drawing Exercises

Exercise 10-1. Using the layout procedures discussed in this chapter, develop the piping arrangement drawing of Unit-01 as shown in Figure 10-1.

Exercise 10-2. Render the elevation view of Unit-01 as shown in Figure 10-41.

Standard Piping Details

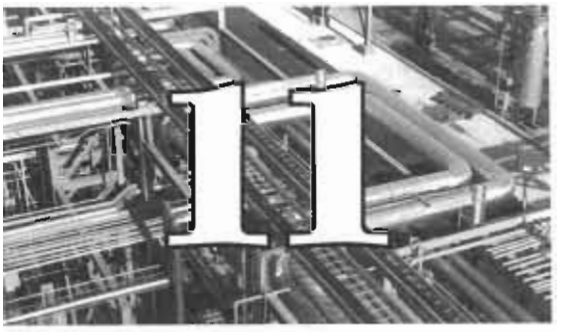

Any project having the complexity of a piping facility will undoubtedly have many components that are used repeatedly throughout the facility. In an attempt to reduce the volume of drawings produced, many companies have initiated the use of *standard piping details*. The standard piping detail is a drawing that depicts an item or items that are used with such frequency and having such consistency in their installation procedure that a single drawing can be created and duplicated for use to represent their installation in almost every situation. Situations in which standard piping details are most likely to be used are for the support, anchoring, guiding, and spacing of pipe. This chapter discusses the methods and devices used in these applications.

PIPE RACK SPACING

Arrangement and positioning are important factors in the layout of a piping facility. Space is limited. Area and boundary limits force conservation of space. Arranging equipment throughout the unit in an orderly and sequential fashion is a necessity. Therefore, proper spacing and arrangement of pipe in the pipe rack requires special attention. A pipe rack has a defined width; therefore, working within the allotted space makes spacing crucial. Not only must pipe be arranged to take up a minimum amount of space, but allowances should be made for any pipe that might be added in the future.

Line spacing dimensions are based on a clearance of 1″ between the outside diameter of the largest flange and the outside diameter of the adjacent pipe. The minimum spacing between any two lines is 4″. If either of the lines is insulated, the thickness of the insulation must be added. When lines are placed adjacent to a wall, column, building, or other structure, a minimum clearance of 2′-0″ is required from the outside diameter of a flange. Pipes having orifice flanges also require a minimum clearance of 2′-0″ on either side of the pipe. Figure 11-1 shows the requirements for establishing the minimum clearances for line spacing.

The line spacing chart shown in Table 11-1 provides the minimum clearances for pipe without insulation.

DRAWING PIPE IN THE RACK

When representing pipe in a pipe rack, the careful arrangement and organization of names, dimensions, and line numbers will make the drawing easier to read. Figure 11-2 shows a pipe rack that has been well organized. Notice how the alignment of notes, dimensions, and other callouts makes the drawing easy to read.

The following guidelines will help you organize your drawing:

1. Keep flow arrows the same size and aligned.
2. Line numbers should be left justified when possible.
3. Pipe commodity should be identified on utility lines only.
4. Line spacing dimensions should align across the pipe rack from one pipe support column to the other. This allows coordinates for each pipe to be calculated since each pipe support column is positioned using a coordinate.

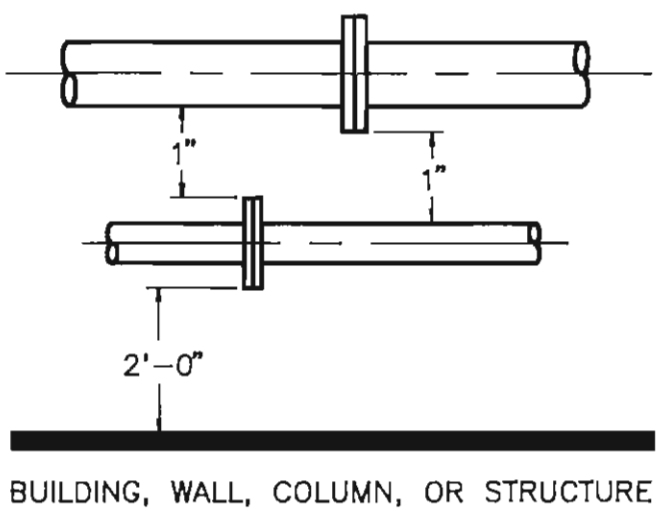

Figure 11-1. Line spacing clearance requirements.

Table 11-1
Line spacing chart.

	PIPE SIZES	300 # 16	14	12	10	8	6	4	3	2
150 #	2	15	14	13	11	10	9	8	7	6
	3	16	15	13	12	11	9	8	7	6
	4	16	15	13	12	11	10	9	8	7
	6	18	16	15	14	12	11	10	9	8
	8	19	17	16	15	13	12	11	10	9
	10	20	18	17	16	14	13	12	11	11
	12	21	19	18	17	15	14	13	13	12
	14	21	20	19	17	16	15	14	14	13
	16	22	21	20	19	18	17	15	15	14

		150 # 16	14	12	10	8	6	4	3	2
150 #	2	14	13	12	11	9	8	7	6	6
	3	15	14	13	11	10	9	8	7	
	4	15	14	13	12	10	9	8		
	6	17	15	14	13	12	10			
	8	18	16	15	14	13				
	10	19	17	16	15					
	12	20	18	17						
	14	20	19							
	16	21								

		300 # 16	14	12	10	8	6	4	3	2
300 #	2	15	14	13	11	10	9	8	7	6
	3	16	15	13	12	11	9	8	7	
	4	16	15	14	12	11	10	9		
	6	18	16	15	14	12	11			
	8	19	17	16	15	13				
	10	20	18	17	16					
	12	21	19	18						
	14	21	20							
	16	22								

PIPE FLEXIBILITY

A major concern when arranging pipe in a rack is the amount of expansion and, to an extent, contraction that occurs when a cold pipe is heated to its normal operating temperature. Because the dimensions provided in the line spacing chart do not account for expansion of a pipe during the start-up of a unit, consideration must be given to the amount of expansion a pipe will undergo as its temperature begins to rise. If the expansion of a pipe will result in its interference with an adjacent pipe, line spacing will have to be increased. If the normal expansion of a pipe will not result in interference, line spacing will not be affected. Remember, space in the rack is limited. Over spacing must be avoided. Figure 11-3 provides two illustrations where additional line spacing may be required.

The interference occurring at point *1* is a result of linear expansion. Lines 103 and 104 have similar spacing in the rack. Both pipes drop out of the rack and rest on a support beam before attaching to a piece of equipment.

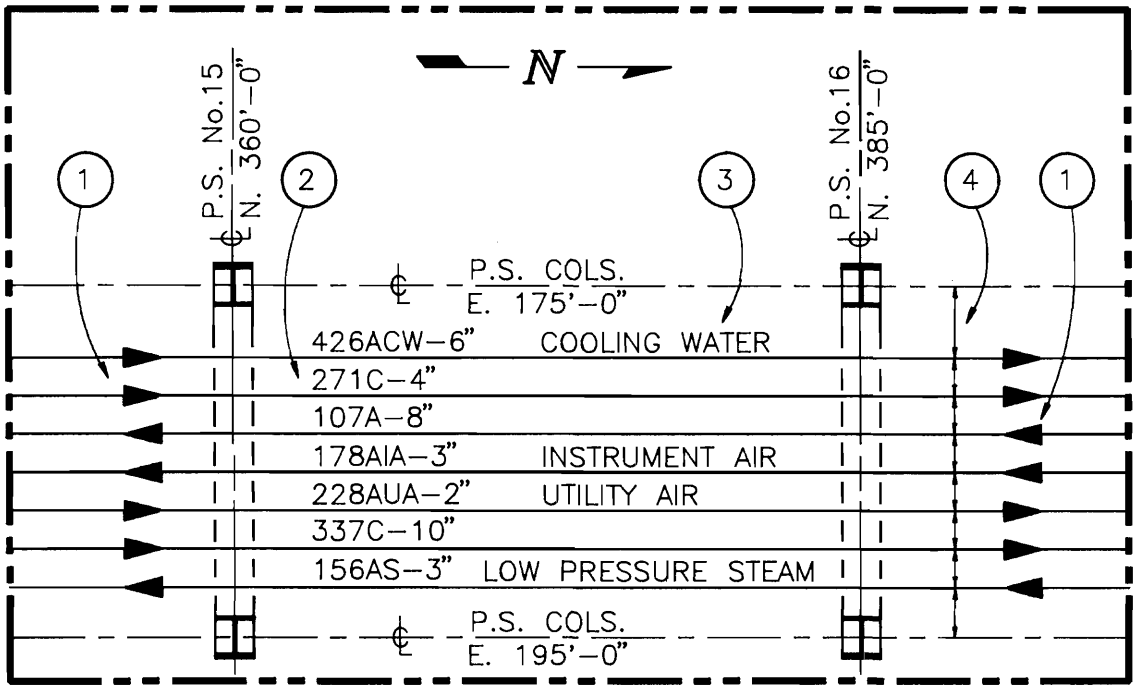

Figure 11-2. Pipe rack drawing organization.

Using the spacing dimension provided in the line spacing chart, these lines need 8″ for adequate clearance. Additional calculations indicate line 103 is expanding 2″ to the south and line 104 is expanding 2″ to the north. By adding one-half the OD of line 103 (2¼″) and one-half the OD of line 104 (2¼″) and the 2″ of expansion for each pipe, it is obvious an interference will result. To avoid this interference, two alternatives are feasible:

1. Increase the spacing between the two pipes if the ends of the pipe where they attach to the pieces of equipment allow it. If this is not possible, use the next alternative.
2. *Cold spring* lines 103 and 104 1″. Cold spring is an installation technique that requires the length of the pipe that is expanding to be cut short by a distance equal to one-half of the length of expansion. In this case 1″ for each line.

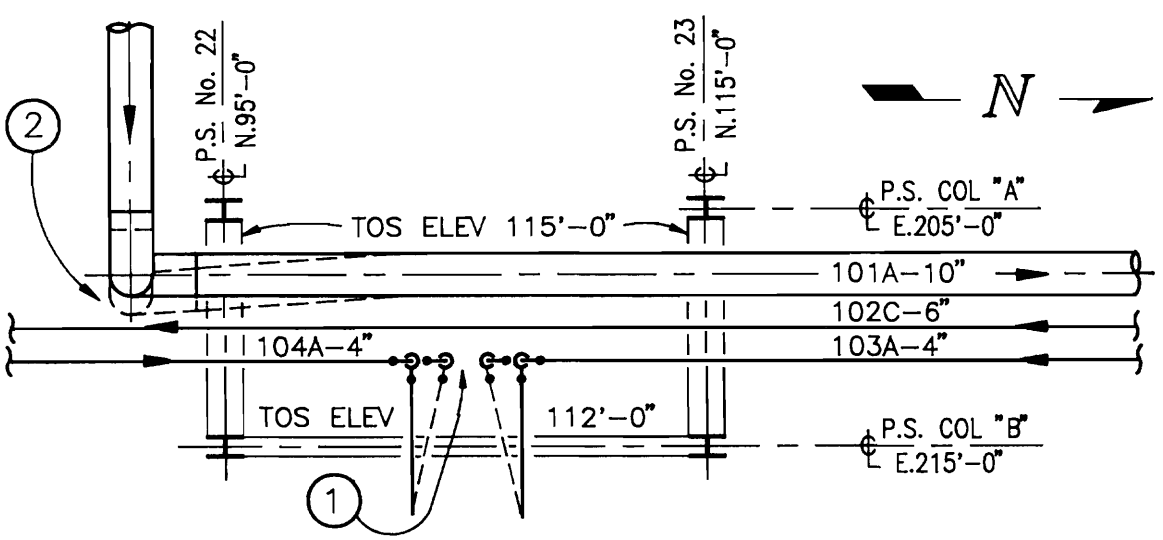

Figure 11-3. Pipe expansion.

When trying to solve the interference problem occurring at point 2, a similar approach can be taken. Either add 1″, the amount of expansion, to the line spacing dimension or cold spring line 101½″ to the west and add ½″ to the line spacing dimension.

PLANNING FOR HEAT EXPANSION

Heat expansion can be quite significant on long runs of pipe, especially those in a pipe rack. To absorb the expansion of pipe in a rack, *pipe loops* are often incorporated. Figure 11-4 shows a pipe loop as a *U-shaped* routing of the line designed to contain the expansion of the pipe. Loops are typically located near the midpoint of a long run of pipe. Expansion will cause the two ends of the pipe to grow toward one another resulting in the distortion of the loop as shown in Figure 11-5.

When multiple loops are placed at the same location, as shown in Figure 11-4, adequate line spacing requires the deflection of each loop be calculated to avoid interference.

Lines resting on *T-supports* must be designed carefully as well. If a line is positioned too close to the end of a support, expansion may push the pipe off the support (see Figure 11-6). Situations like this may require a cold spring or a longer *T-support.*

When multiple lines resting adjacent to one another turn in the same direction, attention must be given to the fact that one line can grow while the other does not. In Figure 11-7 assume lines 105 and 106 are both expanding at the same rate and in the same direction. As they both grow, adequate line spacing will be maintained. But what if line 106 was a cold line and did not grow at the same rate as line 105? Expansion from line 105 would cause interference with 106. To avoid this, the line spacing dimensions *X* and *Y* in Figure 11-7, must be calculated to reflect the conditions of one line being hot and the other cold. Calculations using the hot/cold scenario will guarantee adequate spacing at all times.

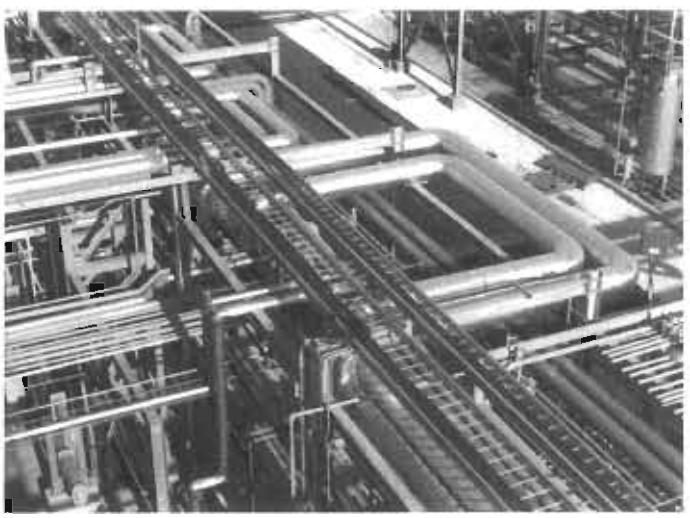

Figure 11-4. Piping loop. Courtesy Nisseki Chemical Texas Inc., Bayport, Texas

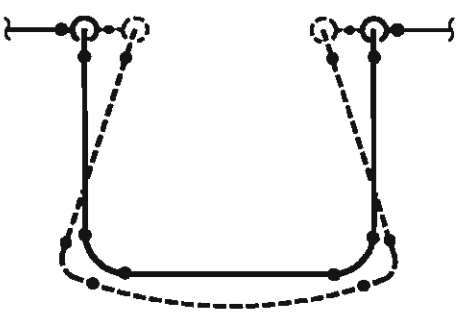

Figure 11-5. Pipe loop distortion.

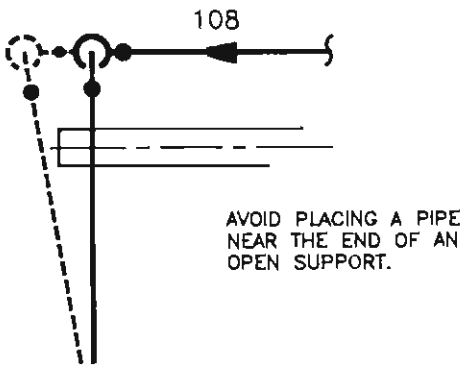

Figure 11-6. Pipe expansion on T-supports.

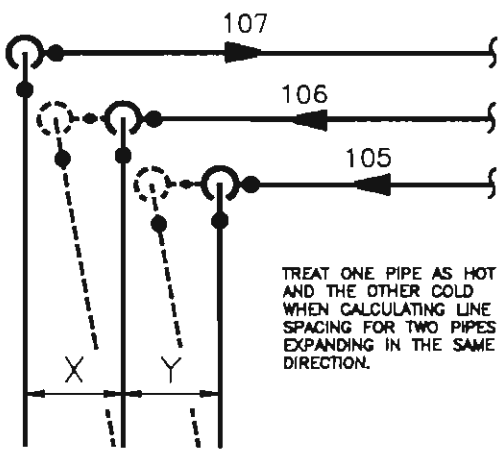

Figure 11-7. Hot and cold line spacing.

PIPE ANCHORS

Expansion is not the only force that can alter the alignment of a pipe. Vibration, commodity turbulence, and other external forces, such as wind, cause a pipe to move. Often restriction of a pipe's movement becomes necessary. To prevent movement or to control the direction of movement *pipe anchors* are often used. Two types of pipe anchors exist: *fixed* and *directional*. Fixed anchors are used in locations where all movement of a line must be prevented. The most common way to anchor a pipe is to weld the pipe directly to a support or structural member. If the pipe to be anchored is insulated, the pipe *shoe* is welded to the structural support. Shoes will be discussed later.

Directional anchors are used to force movement to occur in one direction while preventing it from occurring in the opposite direction. Directional anchors are often used to direct a pipe's movement away from buildings, structures, or pieces of equipment. Figure 11-8 depicts the anchoring of uninsulated pipe.

PIPE INSULATION SHOES

Pipe is often insulated to prevent heat loss or to ensure worker safety. Anchoring lines with insulation requires special preparation. Resting insulated pipe directly on structural support damages the insulation. To protect insulation on pipes 3″ and larger *pipe shoes* are welded to the pipe at the location where it rests on a support.

Attached to the pipe prior to the insulation being installed, shoes are approximately 6″ long and are made from 3″ tall structural *T*-shapes or 6″ wide flanges that have been cut into two pieces (see Figure 11-9). The pipe can then be elevated off the support without damage occurring to the insulation. Pipe smaller than 3″ typically has insulation thin enough to be cut away from the pipe at the point where the insulation would rest on a support. Therefore no shoes are required.

PIPE GUIDES

When total restriction of pipe movement is not required, *pipe guides* are used. Pipe guides confine movement along the pipe's lineal axis. Used primarily to maintain proper line spacing in a pipe rack, pipe guides prevent lateral or sideway movement. Unlike the pipe anchor, which is welded to the pipe and structural support, the guide allows pipe to slide lengthwise between two angle shapes (see Figure 11-10). When a pipe is supported on shoes, the angle shapes are positioned on either side of the shoe (see Figure 11-11).

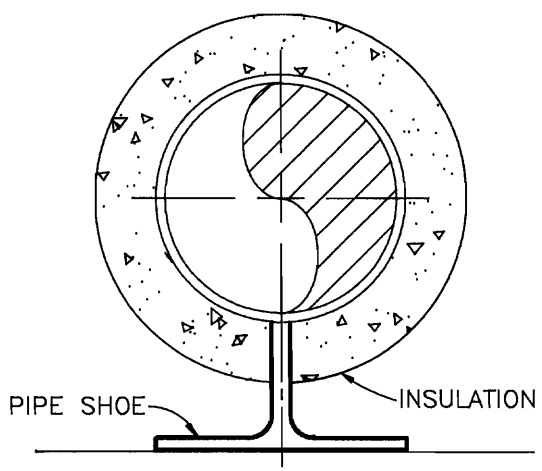

Figure 11-9. Pipe shoe.

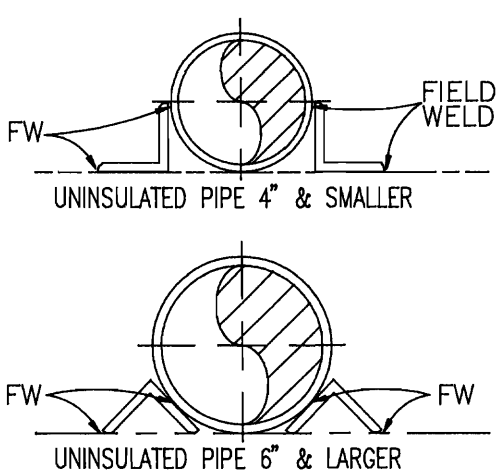

Figure 11-8. Pipe anchors.

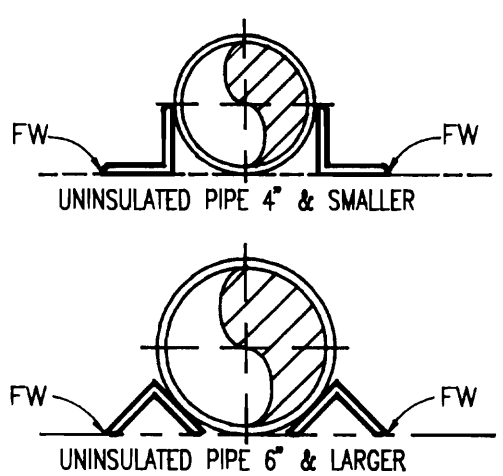

Figure 11-10. Pipe guides.

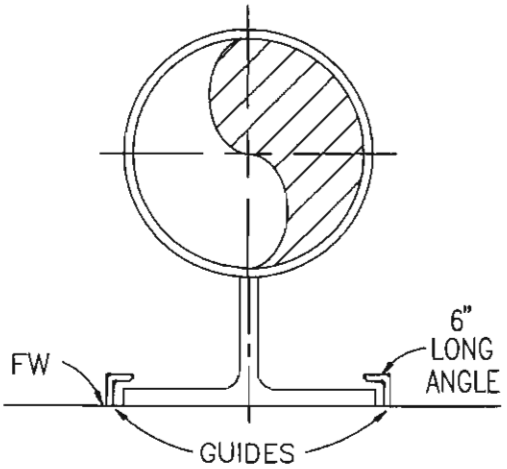

Figure 11-11. Pipe guides with shoe.

FIELD SUPPORTS

Once a pipe drops out of the rack, support must be provided to relieve weight stresses that heavy piping systems can place on nozzles, weld joints, and other critical points. Nozzles and welded joints are not designed to carry heavy loads. Extreme loads placed on a nozzle could result in the nozzle being pulled off the vessel or piece of equipment. Lateral forces applied to weld joints could have the same result. Field supports are designed to support pipe routed down to grade or anywhere structural support is not provided. Figure 11-12 shows a field support being used to carry the load that would otherwise be placed directly on a stub-in branch connection.

The *base support* is a type of field support that rests on the ground, platform, or other stationary surface and is used to support control stations and other pipes routed no more than 2′-0″ above grade level. As seen in Figure 11-13, some base supports are dummy welded to the bottom surface of an elbow to provide support. Others are

Figure 11-12. Field support. Courtesy Nisseki Chemical Texas, Inc., Bayport, Texas.

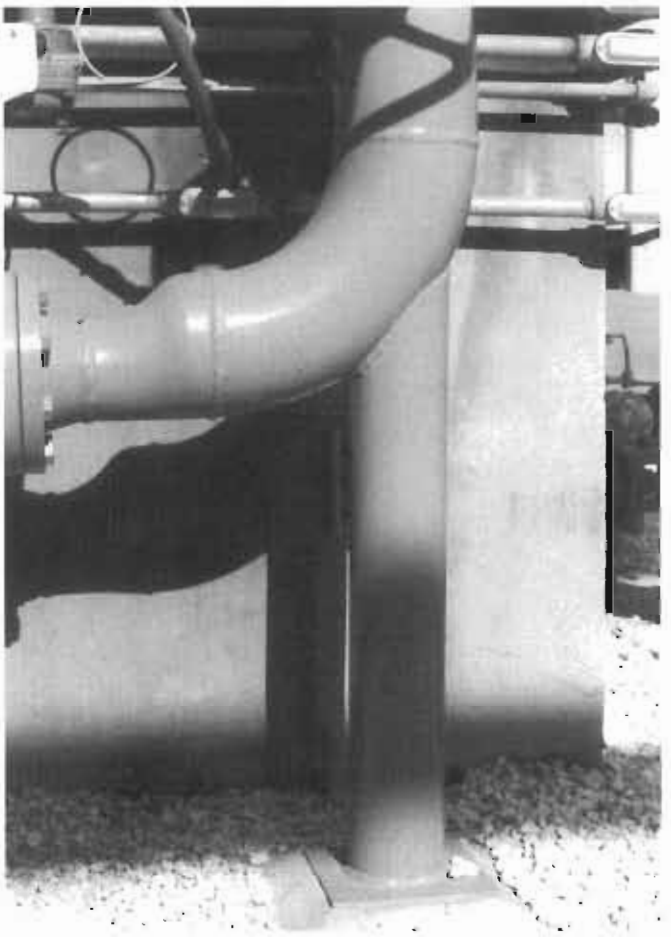

Figure 11-13. Base support. Courtesy Nisseki Chemical Texas, Inc., Bayport, Texas.

attached by bolting. Although similar in function, base supports differ in size, attachment methods, adjustability, and load capacity.

When the distance from pipe to grade makes the base support inappropriate, a support fabricated from angle iron or structural channel is used. These supports are generally bolted or welded to structural steel or concrete columns. They are typically less than 2′-6″ in length and, with a load capacity of 500 pounds, are used only on pipe 12″ and smaller (see Figure 11-14).

DUMMY SUPPORTS

The dummy support or *dummy leg* as it is also known is used to support pipe that would not otherwise be supported due to its short length or change in direction. The dummy leg is a piece of open pipe welded to the outside of an elbow. The piece of open pipe acts as a continuation of the pipe's axis thereby allowing it to extend across a horizontal structural support (see Figure 11-15).

HANGER RODS

Hanger rods are the standard supporting device used when a pipe, or pipes, must be supported from above. Hanger rods are suspended from overhead lines or structural supports. Two major styles of hanger rods are used. One is designed to support a single pipe and one intended to support multiple lines. Used on lines up to 24″ in diameter, and having a load capacity of 4,800 pounds, the single pipe hanger uses a rod and clevis to provide support (see Figure 11-16). The multiple line hanger is often called a *trapeze*. It uses a length of steel angle suspended by two rods at the ends (see Figure 11-17). The trapeze can vary from 3′-0″ to 10′-0″ long from center to center of the rods with the shorter length carrying a maximum load of up to 4,900 pounds.

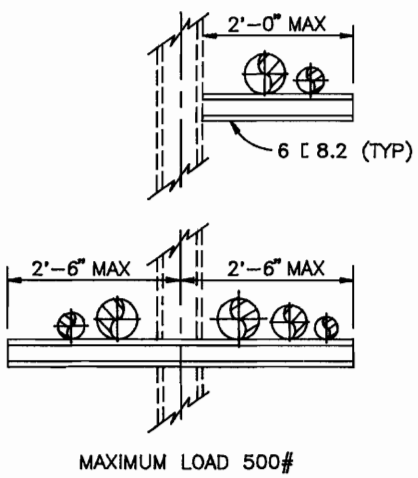

Figure 11-14. Channel supports.

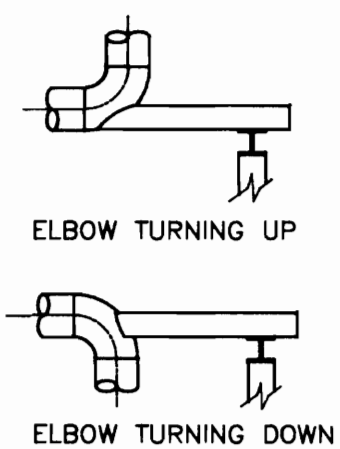

Figure 11-15. Dummy support.

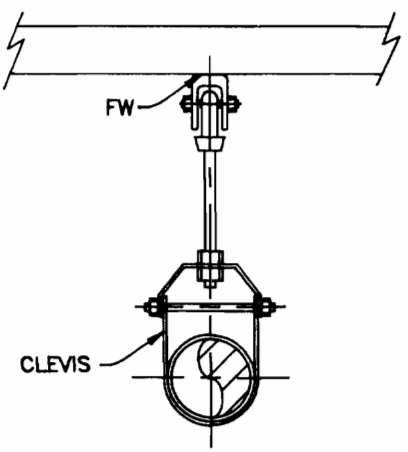

Figure 11-16. Rod and clevis.

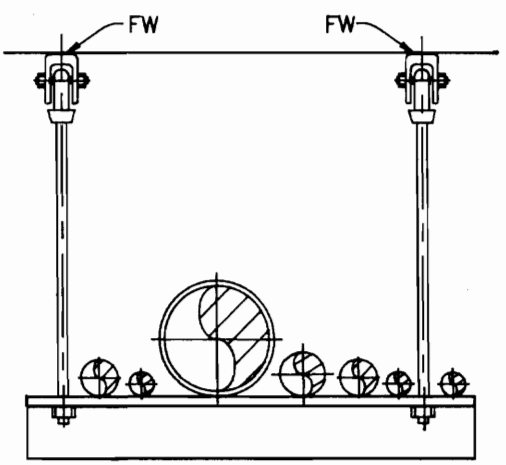

Figure 11-17. Trapeze.

SPRING HANGERS

Lines having significant growth, due to expansion, prevent the use of a stiff support such as a hanger rod or trapeze. These lines require the use of *spring hangers*. Spring hangers allow expanding pipes room to grow without placing stress on the supporting rod (see Figure 11-18).

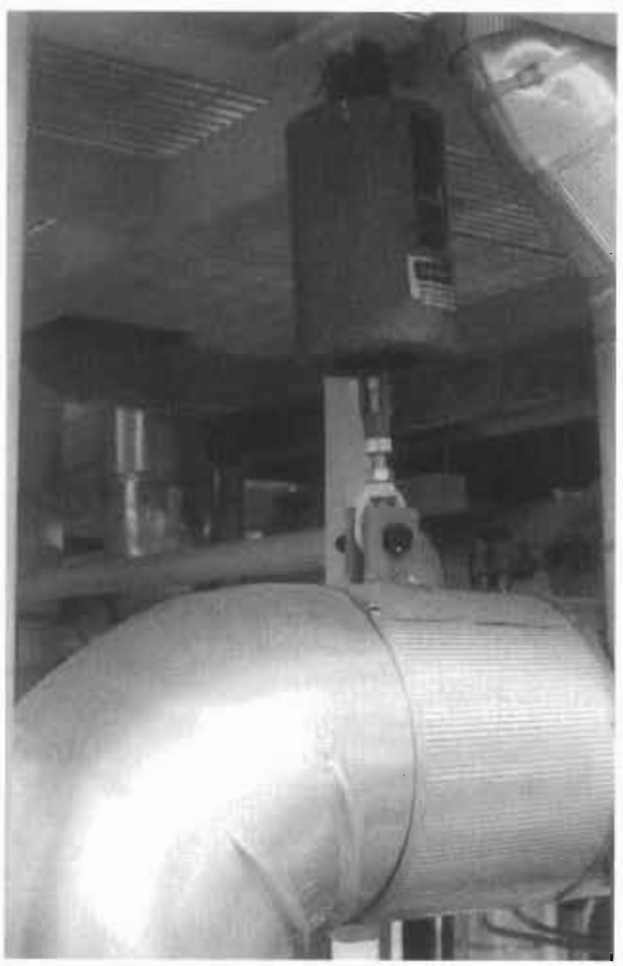

Figure 11-18. Spring hanger. Courtesy Nisseki Chemical Texas, Inc., Bayport, Texas.

PICK-UP PIPE SUPPORTS

In most piping facilities, structural column spacing in the pipe rack is 25′-0″. For large diameter pipe, spanning this distance poses no problem. Smaller diameter pipes, however, don't have the strength necessary to span this distance and will sag between supports. These sags or *pockets* can become so severe they can prevent commodity flow. *Pick-ups* are designed to use the larger pipes to support the smaller pipes. Using a length of steel angle attached to the larger diameter pipe with U-bolts allows the small diameter pipes to be supported at their weakest point (see Figure 11-19). Pick-ups can span up to 10′-0″ and carry a load of 1,200 pounds.

The various guides, supports, and anchors discussed in this chapter play a significant role in the overall design of a piping facility. Each one requires special analysis and calculations to be properly installed. Most companies have strict guidelines governing the use of these items. Only designers with years of experience should make decisions on when and where to use these devices.

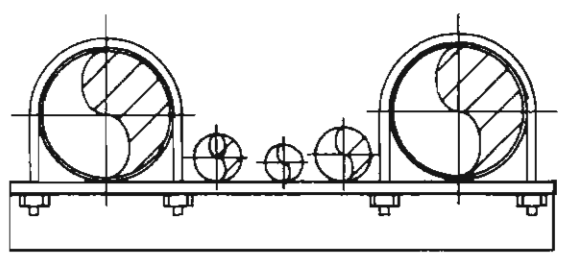

Figure 11-19. Pick-ups.

CHAPTER 11 REVIEW QUIZ

1. Why is *line spacing* critical?

2. What is the minimum spacing between lines?

3. Define *cold spring*.

4. What is a *pipe loop*?

5. Name two types of pipe anchors.

6. What is a *pipe shoe*?

7. Explain the difference between a pipe anchor and a pipe guide.

8. What is the function of a *dummy leg*?

9. Name two types of hanger rods.

10. What are *pick-up* supports designed to prevent?

Piping Systems

Within every piping facility there are specific piping systems that perform specialized functions. These systems vary in their importance to the overall operation of the facility and can range from vital to peripheral. These systems can be complex in design or simple in function. The systems described in this chapter are examples of those commonly found in many piping facilities.

PLANT UTILITIES

Every piping facility is designed for a definite purpose. Most commonly that purpose is to produce a product that can be sold for profit. In order to achieve the intended purpose of the facility, certain components are incorporated into its design. Plant utilities are among these. By design they are not the profit-producing product. However, plant utilities provide services that are essential to the efficient operation of the facility. Utilities include systems such as water, steam, condensate, fuel oil and gas, flares, and air.

Water Systems

Often taken for granted, water systems play an important part in a piping facility's successful operation. Water systems can include cooling water, boiler water, plant water, utility water, and emergency water.

Cooling Water

Cooling water flows through a closed piping system that circulates water through various pieces of equipment. Exchangers and condensers require chilled water to reduce the temperature of the process commodity. As water circulates through the shell of an exchanger, heat is transferred from the process commodity to the cooling water. To maintain its effectiveness, the cooling water is piped to a cooling tower where the heated water is aerated to reduce its heat gain. After the heat has been removed from the cooling water, the chilled water travels back to the exchanger and repeats the process.

Boiler Water

Boiler water is the piping system that delivers feed water to all steam generating equipment in a facility. Steam is generated by boilers, heaters, even nuclear reactors, and is used in a wide variety of piping facilities.

Emergency Water

Designed specifically for worker safety, emergency water systems include eye wash and emergency shower stations. Emergency shower stations are provided in all areas where maintenance and operational personnel are subject to hazardous leaks or spills. Eye wash stations are also provided for situations where physical injury may be caused by chemical sprays or hazardous fumes.

Steam and Condensate

Steam has a number of uses in various piping facilities. Made by on-site equipment, steam is relatively inexpensive. Many utility companies use steam as their source for powering huge generators to produce electricity. Multistoried buildings use steam to heat a building's occupied areas during winter months. Cargo ships use steam as their primary source of power. In petrochemical facilities, steam is used to power the steam turbines used as drivers on pumps and compressors.

In petrochemical facilities, *super-heated* steam is also used as *stripping steam*. Stripping steam is used in fractionation columns to enhance the effectiveness of the fractionation process. In situations where heat tracing is required, steam is used to maintain constant temperatures and prevent commodities with slow flow characteristics from freezing. During shutdowns, steam is used as a means of cleaning parts and equipment.

Condensate is the visible evidence of steam condensing. In its purest form, steam is invisible. Only when steam cools and becomes heavy with water vapor is it visible. Condensate is undesirable in certain situations so it must be removed from steam lines. When moved under extreme pressure, condensate can be damaging to

equipment such as turbine impellers. Condensate is separated from the steam by *traps*. Steam traps are placed at pocketed low points and at the dead ends of steam headers to collect condensate. Condensate is then piped back to fired equipment where it is converted back into steam.

Fuel Oil and Fuel Gas

These commodities are used as fuel for heat sources such as fired heaters and boilers.

Flare Systems

The most noticeable piece of equipment in use, especially after dark, the flare is where waste gases and vapors are burned. Flare systems collect gases created during start-ups and those released from pressure safety valves and routes them to the flare stack to be burned. Flare stacks are typically located up-wind of process units and are placed a minimum distance of 200′ from the closest piece of process equipment, storage tanks, or cooling towers. Figure 12-1 depicts a typical flare stack.

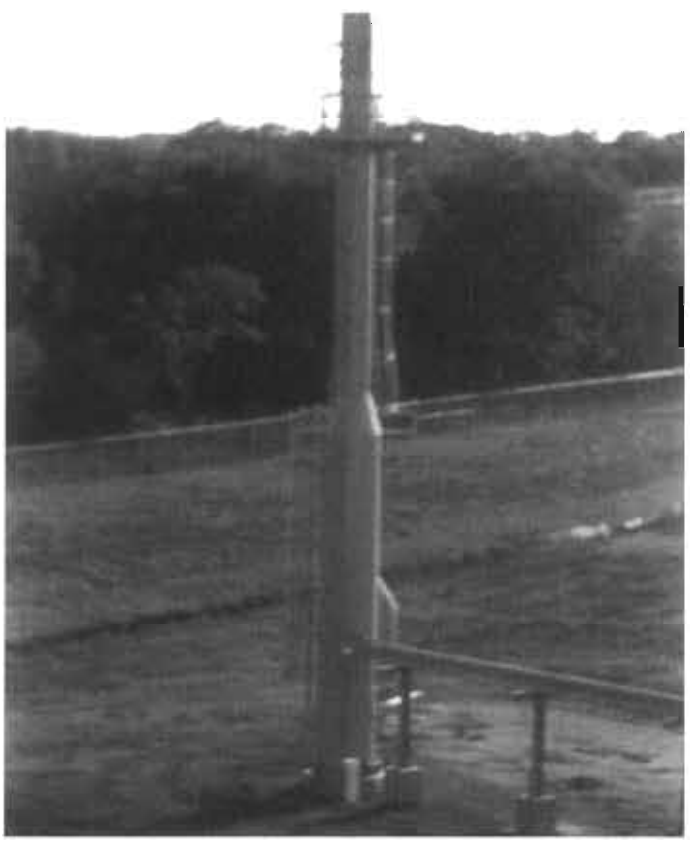

Figure 12-1. Flare stack. Courtesy Nisseki Chemical Texas, Inc., Bayport, Texas.

Air Systems

Another plant utility that is essential to the operation of the facility is its air system. There are two types of air systems: utility air and instrument air.

Utility air

Utility air is compressed air piped throughout the facility to power pneumatic tools and equipment. Impact wrenches, grinders, and other pneumatic tools are commonly used during normal plant operations. During times of a shut-down, scheduled maintenance and repairs require workers to loosen nuts and bolts that have not been removed for quite some time. Power driven tools are the only efficient means of timely maintenance.

Instrument air

Instrument air is also a compressed air system, but with a much different task. Instrument air is used to operate all pneumatic monitoring and controlling instruments in the piping facility. Pneumatic instruments such as control valves, recorders, and indicators require an uninterrupted feed of air to provide continual monitoring and operational control. Routed through small bore pipe and tubing, the compressed air in an instrument air system has been dried and purified to remove all moisture and any airborne particles to prevent damage to the instruments.

CONTROL VALVE MANIFOLDS

Control of the commodity traveling through pipe and equipment and accessibility to the controlling apparatus are two major concerns in any piping facility. The control valve manifold addresses both of these concerns. The control valve manifold is a series of valves, fittings, and piping placed at grade or platform level that uses an automatic valve to control and monitor the flow of a commodity through a piping system. The photograph in Figure 12-2 depicts a typical control valve manifold arrangement.

Notice the valves used in Figure 12-2. Four different types of valves are used in the typical control valve manifold. The valve in the center of the configuration is the *control* valve. It has a globe valve or similar body type and uses a pneumatic or hydraulic actuator to automatically regulate the commodity's rate of flow. The valves to the right and left of the control valve are called *block* valves. Block valves are gate valves that are used to block the flow of the commodity through the control valve during times of repair or replacement.

When the block valves are closed, the commodity can be controlled manually by the *bypass* valve. The bypass valve is either a globe, plug, or ball valve located on the bypass line found above the control valve. The bypass valve is normally closed but is opened when the block valves are closed and flow must be regulated manually. The fourth valve type is the *drain* valve. It is the small valve shown below the left reducer. The drain valve is opened after the block valves have been closed and before the bolts have been loosened on the flanges that sandwich the control valve. The drain allow the commodity trapped below the two block valves to be captured and disposed of without a spill occurring.

Control valve manifolds can have various configurations depending on the placement of the block valves. Care must be taken to orient the handwheels away from equipment, aisleways, and other obstructions. Figure 12-3 depicts the graphical representation of the control valve manifold shown in Figure 12-2.

Figure 12-2. Control valve manifold. Courtesy Nisseki Chemical Texas, Inc., Bayport, Texas.

When drawing the plan view of a control valve manifold on a piping arrangement drawing, minimal information is provided. Figure 12-4 shows the plan view of a typical control valve manifold. Notice only the overall length and the centerline elevation is provided. An instrument bubble is shown to aid in the identification of the control valve. Handwheel orientation of the block valves must be shown so representation can be made on isometric drawings. If, for clearance purposes, handwheels of the block valves are oriented with an offset angle, the angle of offset must be shown on the arrangement drawing.

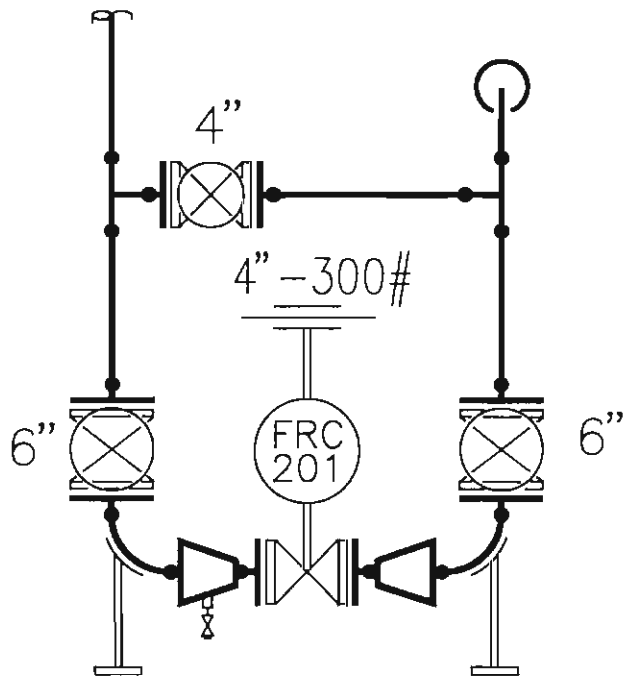

Figure 12-3. Control valve manifold drawing.

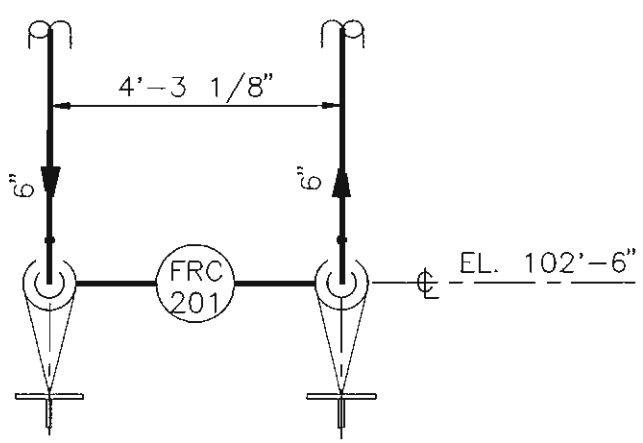

Figure 12-4. Control valve manifolds on arrangement drawings.

UTILITY STATIONS

Organization is essential to quality design. Organizing a piping facility with maintenance in mind is crucial to efficient plant operation. Small independent maintenance centers called *utility stations* are located throughout a piping facility. Utility stations provide maintenance and operational personnel with centralized locations to find water, air, steam, and occasionally nitrogen. Utility stations are placed throughout a facility in such a manner to allow a utility hose 50′-0″ long to cover designated areas. A typical utility station is shown in Figure 12-5.

Water and steam are typically found only at utility stations located at grade level. These utilities are necessary for equipment that must be washed or steamed clean. Utility air is a service required at all stations in areas where pneumatic power tools are used. Manways are located at the higher elevations of vertical vessels. Utility stations must be positioned so utility hoses can easily reach them. Nitrogen may be required in specific areas where instrument lines must be purged during times of maintenance or repair.

Figure 12-6 represents a typical utility station as it may appear on piping arrangement drawings.

Figure 12-5. Utility station. Courtesy Nisseki Chemical Texas, Inc., Bayport, Texas.

METER RUNS

Developing a piping system that incorporates smooth and consistent flow characteristics is imperative in any piping facility. The ability to measure the rate of flow of a commodity is necessary at various stages throughout a facility. Rate of flow is simply a measurement of the amount of commodity flowing through a pipe in a specified amount of time. The most common way to achieve this is through a section of pipe referred to as a *meter run*. A meter run is the name given to a straight run of pipe that uses a set of orifice flanges to measure the rate of flow.

You may recall, orifice flanges have valve taps that allow monitoring equipment to be attached to record the differential pressure of a commodity traveling through an orifice plate (see Figure 12-7).

The critical part of a meter run is the orifice plate. The orifice plate is a thin, flat, circular piece of metal with a handle attached. The orifice plate is sandwiched between two orifice flanges. A typical orifice plate is shown in

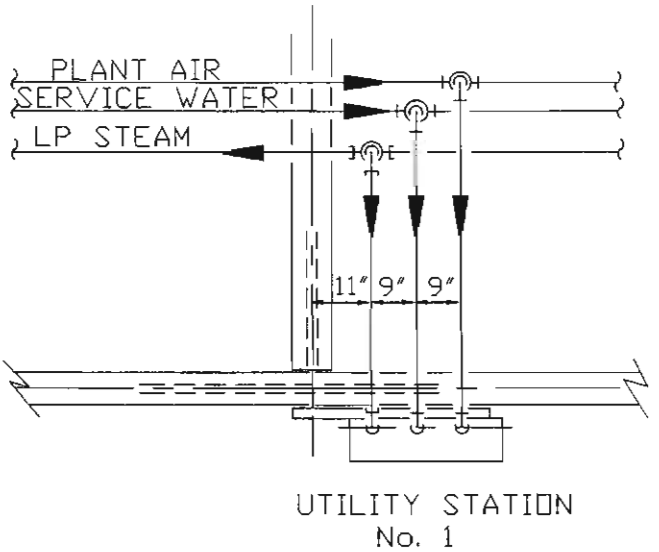

Figure 12-6. Utility station drawing.

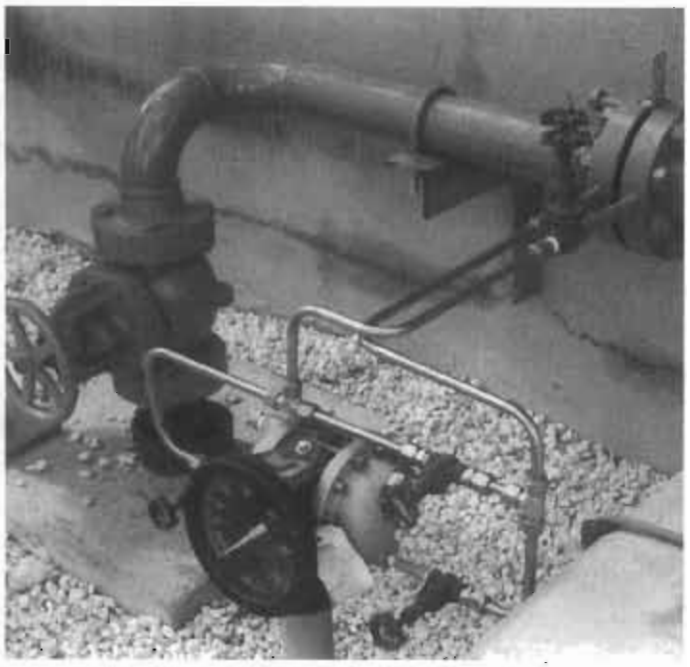

Figure 12-7. Orifice flanges with valve taps. Courtesy Nisseki Chemical Texas, Inc., Bayport, Texas.

Figure 12-8. A small diameter hole is bored through the center of the plate approximately 75% of the diameter of the pipe. By inserting monitoring equipment into the valve taps, the rate of flow of the commodity can be measured.

To receive the most accurate reading possible, turbulence within the pipe must be kept to a minimum. Turbulence is created by obstructions from items such as fittings and valves. A smooth, consistent flow is created by providing a sufficient amount of straight pipe before and after the orifice flanges. These *upstream* and *downstream* pipe distances are established by using specific lengths of pipe based on the diameter of the pipe. A rule-of-thumb formula to calculate these lengths is shown in Figure 12-9.

To use the formula shown in Figure 12-9, simply multiply the upstream and downstream diameters times the nominal pipe size. The following is an example to calculate the upstream and downstream pipe lengths for a 6″ pipe meter run.

Upstream distance = 30 (diameters) × 6″ = 180″ = 15′-0″

Downstream distance = 6 (diameters) × 6″ = 36″ = 3′-0″

Again, the formula above is a rule-of-thumb guide. Specific values for upstream and downstream diameters vary depending upon the configuration of the piping system in which the orifice flanges are installed. Review the client's specifications for the project you are working on to verify the correct upstream and downstream diameters.

SEWER AND UNDERGROUND PIPING SYSTEMS

Though they are not readily visible, extensive piping systems can exist below grade. Some piping systems by their very nature must be run underground. Others are placed there as a matter of convenience. Although they both are placed below grade, there is a difference between underground sewer and piping systems. The main difference is that sewer systems are gravity flow and have an origin that is open to atmosphere, while underground piping systems are closed systems that have a defined and constant pressure.

Sewer Systems

Underground sewer systems are designed for a number of commodities. They may include sanitary and raw sewage lines, storm and firewater drains, or process waste run-off and oily water sewers. Storm and firewater drain

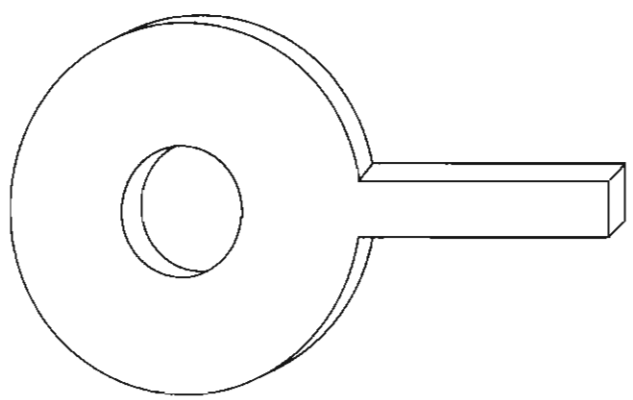

Figure 12-8. Orifice plate.

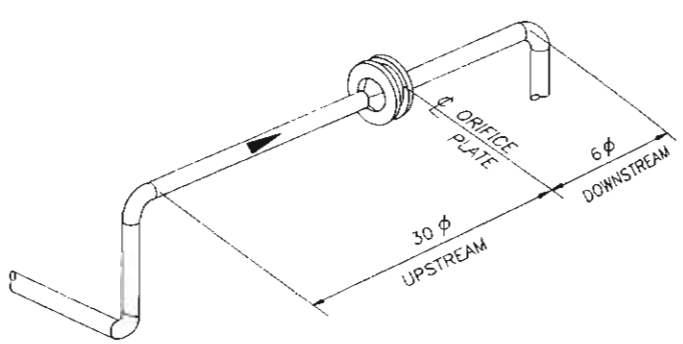

Figure 12-9. Meter run length calculations.

lines are often run separately for those systems that will carry raw sewage and corrosive chemical wastes. Oily water sewers collect oily waste and residue from compressors, pumps, and other equipment. Each commodity requires special treatment and therefore must be routed to different treatment facilities. Because they are gravity flow, these systems are generally fabricated using no pipe smaller than 4″ in diameter.

Underground Piping Systems

Many lines are placed below the ground that are not related to sewer systems. These lines may be cooling water lines, firewater systems, product supply lines, and others. To prevent frequent line replacement, commodities flowing through piping systems that lie below grade have minimal corrosive properties or have special corrosion allowances established for the pipes through which they flow. However, the corrosion of external metal surfaces below ground is also a matter of concern. When an exposed metal surface lies in moist or salt-laden soil, galvanic corrosion begins to occur. Any of a number of factors may cause a small amount of electrical current to flow through the soil and the pipe. Where the current discharges into the soil, metal is removed from the surface of the pipe and corrosion occurs. For these underground metal surfaces, cathodic protection systems are used. Cathodic protection employs the use of positively charged electrodes that neutralize the corrosive effects of negatively charged particles in the earth.

CHAPTER 12 REVIEW QUIZ

1. What are plant utilities?

2. Name five water systems that can be found in a piping facility.

3. Define *super-heated* steam.

4. What is a steam trap?

5. What is the minimum distance a flare stack can be installed next to other pieces of equipment?

6. Explain the difference between utility air and instrument air.

7. What is the function of a control valve manifold?

8. List the four types of valves used in a control valve manifold.

9. What is a utility station?

10. What is a meter run?

Piping Isometrics

WHAT IS AN ISOMETRIC?

An isometric is a type of three-dimensional drawing known as a pictorial. Isometrics, or *isos* as they are commonly called, are developed using the three primary dimensions of an object: height, width, and depth. Unlike orthographic drawings that represent the height, width, and depth dimensions in separate views (see Figure 13-1), the isometric combines the three dimensions of the object into a single view to provide a pictorial representation (see Figure 13-2). To include the height, width, and depth dimensions in a single view, an isometric must be drawn on axes that measure 30° from the horizontal plane as shown in Figure 13-2.

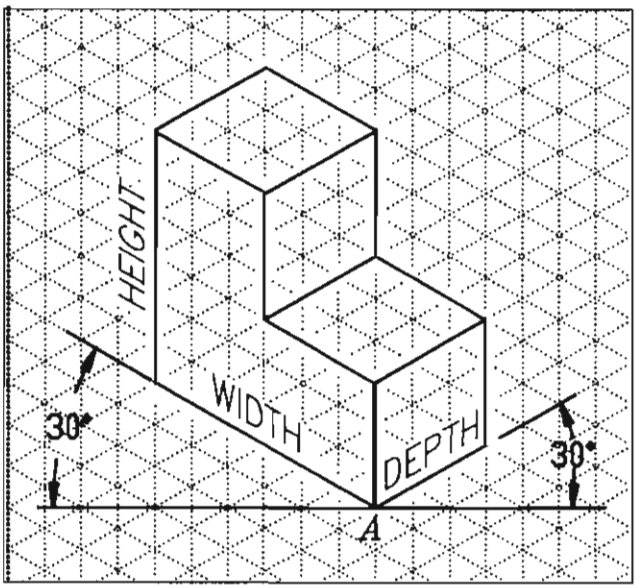

Figure 13-2. Isometric view.

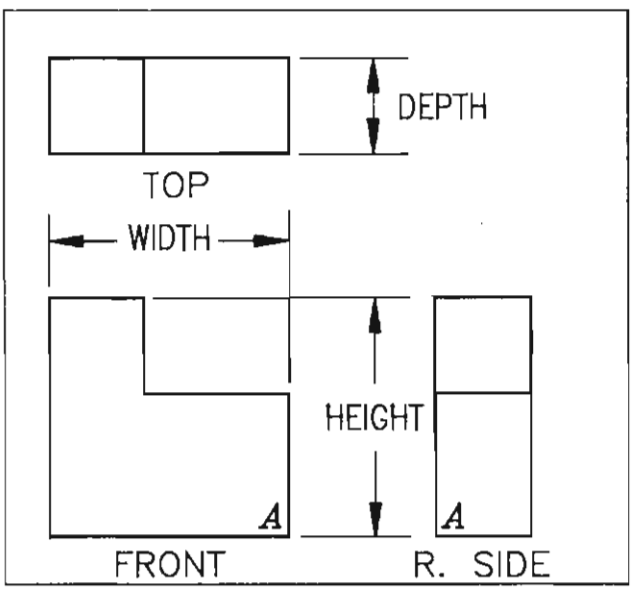

Figure 13-1. Orthographic views.

Similar to the front, top, and right side views in Figure 13-1, piping plans, sections, and elevations offer limited visualization of an object, especially when piping components like fittings, flanges, or valves are incorporated. However, by combining the height, width, and depth dimensions found on plan, section, or elevation views, a single pictorial view can result in a drawing that provides greater clarity of the piping configuration. A comparison of Figure 13-3 with Figure 13-4 shows that a piping isometric with piping symbols is obviously clearer and easier to understand than an orthographic view.

The piping isometric is an important drawing that serves several purposes. It is the primary source for *material take-off* of each pipe configuration in the facility.

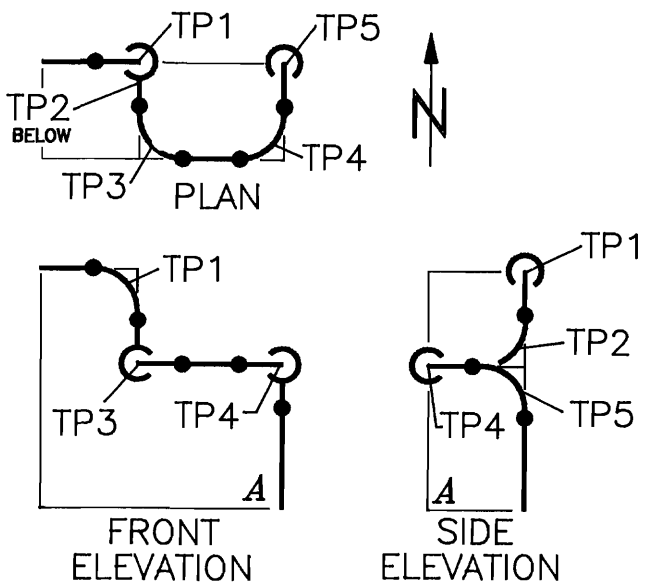

Figure 13-3. Piping orthographic views.

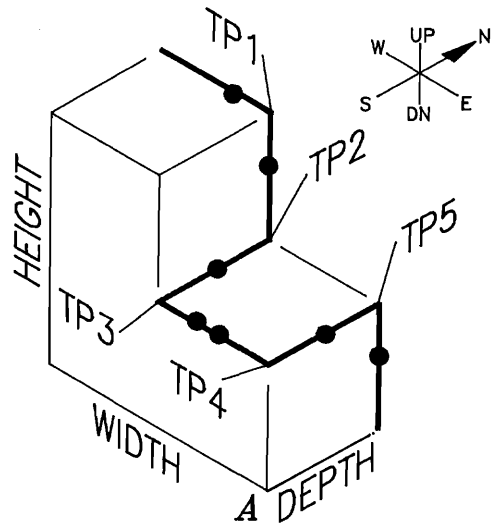

Figure 13-4. Piping isometric view.

Material take-off is the process by which each individual component that makes up a pipe configuration is tabulated for purchase or procurement. This means all piping components (elbows, flanges, nuts, bolts, washers, gaskets, etc.) must be accounted for so that purchases of those items can be made. Isometrics are also used by many companies as fabrication drawings. Once drawn and properly dimensioned, isometrics are provided to fabricators who will build each piping configuration. After configurations are fabricated, isometrics serve as an aid to the construction and erection of the facility by providing workers with the locations of tie-ins, connections, and routings.

Most engineering and construction companies draw a piping isometric of every piping configuration to be installed in the facility. Piping isometrics are typically drawn single lines no matter the pipe's size, with each pipe line drawn on a separate sheet of vellum having an isometric grid background. Isometrics are also drawn as a schematic, which means they are not drawn to scale. Isometric symbols for fittings, flanges, and valves represent all sizes of pipe. No attempt is made to represent a pipe's actual size or pound rating graphically. This information is conveyed through the use of callouts and notes placed on the drawing. Although piping isometrics are not drawn to scale, drafters should make every effort to draw them proportionally. Drawing an iso proportionally simply means drawing a 10′-0″ run of pipe twice as long as a 5′-0″ length of pipe.

To be successful in drawing isometrics, the pipe drafter must be able to interpret the information conveyed by the drawing symbols for fittings, flanges, or valves used on piping arrangement, section, and elevation drawings and transfer that information to the isometric. Notice in Figures 13-3 and 13-4 that the elbow symbols differ in the orthographic views and in the isometric view. Piping drawing symbols used on plan, section, or elevation views dictate whether a pipe turns left, right, up, or down. When a pipe on a piping orthographic drawing makes a change in direction, that change must also be reflected on the isometric. The point at which the pipe changes direction is referred to as the *turning point* (TP). To correctly draw the isometric representation of a pipe shown on a plan, section, or elevation view, the pipe drafter must be knowledgeable in the use of piping symbols used for orthographic views and the corresponding symbols used for isometric views.

To make piping isometrics look uniform, most companies use the grid units on the isometric vellum to establish sizes for fitting, flange, and valve symbols. Remember piping isometrics are not drawn to any particular scale. No matter what size or pound rating fittings may be, they are all shown the same size. Figure 13-5 shows the size and shape of manually drawn isometric symbols for fittings, flanges, and valves relative to the isometric grid. These symbols are typical of industry applications and should be used as a guide when drawing piping isometrics.

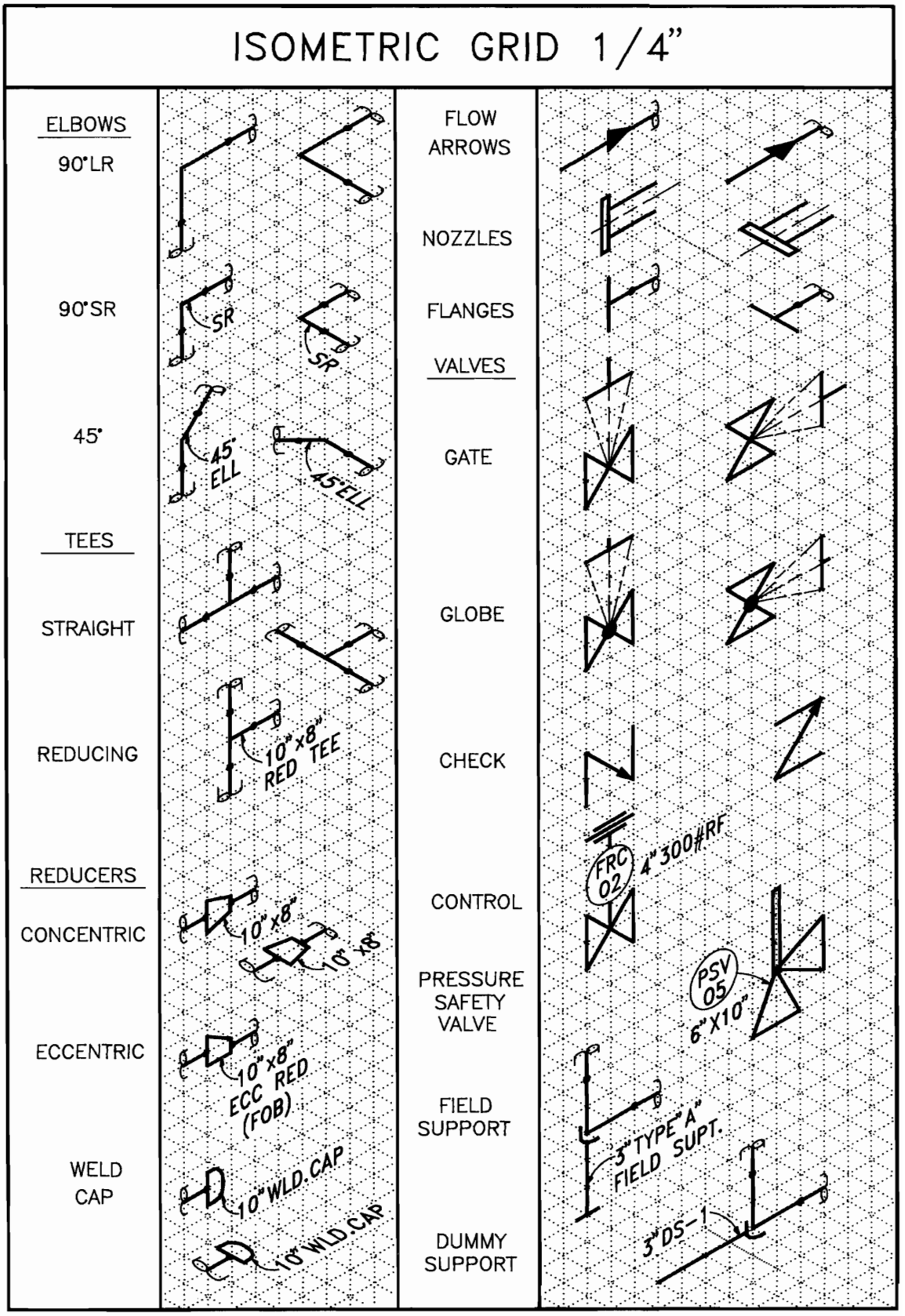

Figure 13-5. Isometric piping symbols.

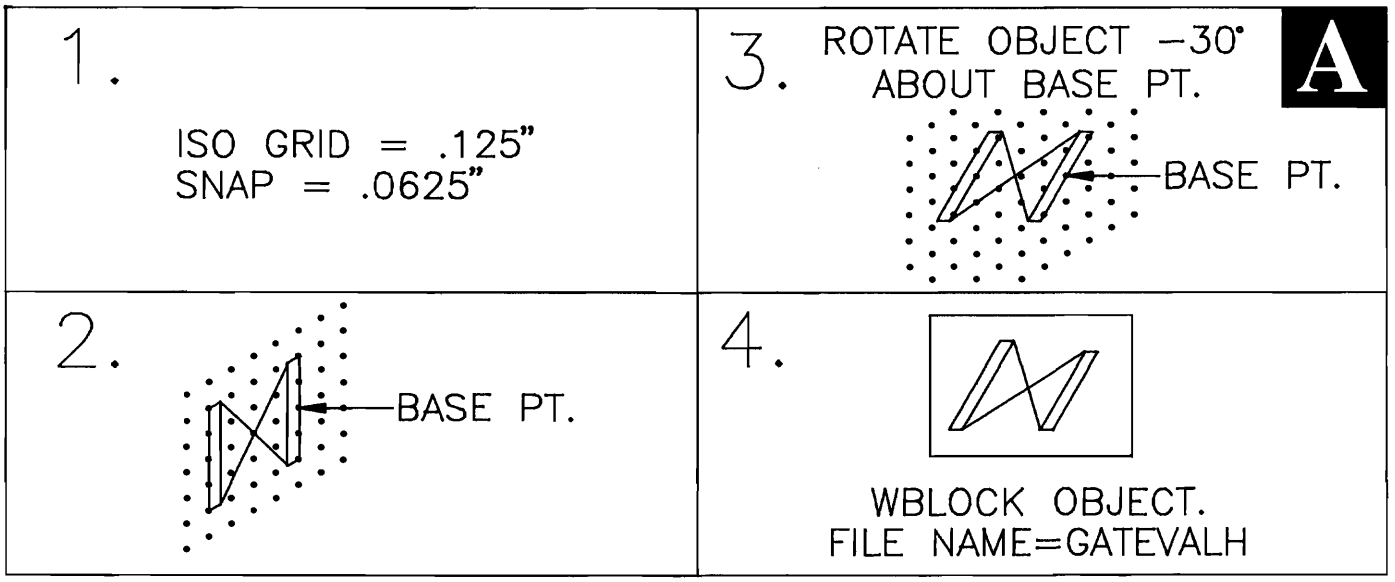

Figure 13-6. Creating isometric piping symbols using **AutoCAD**.

STEP 1. Drawing setup. Set the **SNAP** *Style* to *Isometric.* Set the vertical spacing to .125". Set **SNAP** TO .0625."

STEP 2. Draw the desired symbols. Use the **BASE** command to place a base point in the location designated in Figure 13-7.

STEP 3. Use the **ROTATE** command to revolve each symbol –30° about its base point.

STEP 4. WBLOCK each symbol using the name associated with each symbol in Figure 13-7.

Isometric symbols drawn with **AutoCAD** can be developed so that a single orientation of the symbol can be used in any of the isometric axes. Isometric symbols can be drawn, rotated, and **WBLOCKed** for repeated use in any drawing at any isometric angle. Initially symbols for fittings, flanges, or valves are drawn on the north/south isometric axis, but, before they can be used in the other isometric axes, they must be rotated –30° about a base point placed on the center of the symbol. Use the step-by-step procedures illustrated in Figure 13-6 to create isometric piping symbols using **AutoCAD** commands. Figure 13-7 shows the size of the symbols relative to the isometric grid in **AutoCAD.**

Notice that in Figures 13-1 and 13-2 the height, width, and depth dimensions in the orthographic views are assigned to the isometric view using point **A** as a point of reference. On piping isometrics, establishing a point of reference becomes even more imperative. The complexity of piping configurations requires a point of reference to establish orientation between the orthographic and isometric views. The north arrow is used as this point of reference. Accurate isometric layout is based on the orientation of the north arrow on the piping arrangement drawing and the north arrow on the piping isometric. Figure 13-8 illustrates the relationship between the piping arrangement drawing north arrow and the north arrow on the isometric.

Knowing that a piping arrangement drawing is a plan view drawing, a pipe can be determined to be turning north, south, east, or west when oriented relative to the drawing's north arrow. So, if a pipe that has been traveling north turns down and then east on the arrangement drawing, it should also be shown to travel north, turn down, and then east on the isometric drawing (see Figure 13-9).

Most companies prefer to draw piping isometrics with the north arrow pointing up and to the right. An alternate position is to draw the north arrow pointing up and to the left. This is done, however, only in exceptional cases to improve drawing clarity. Figure 13-10 uses the configuration from the previous figure to demonstrate how drawing an isometric with the north arrow pointing up and to the left will affect the isometric representation. It is never appropriate to show the north arrow pointing down.

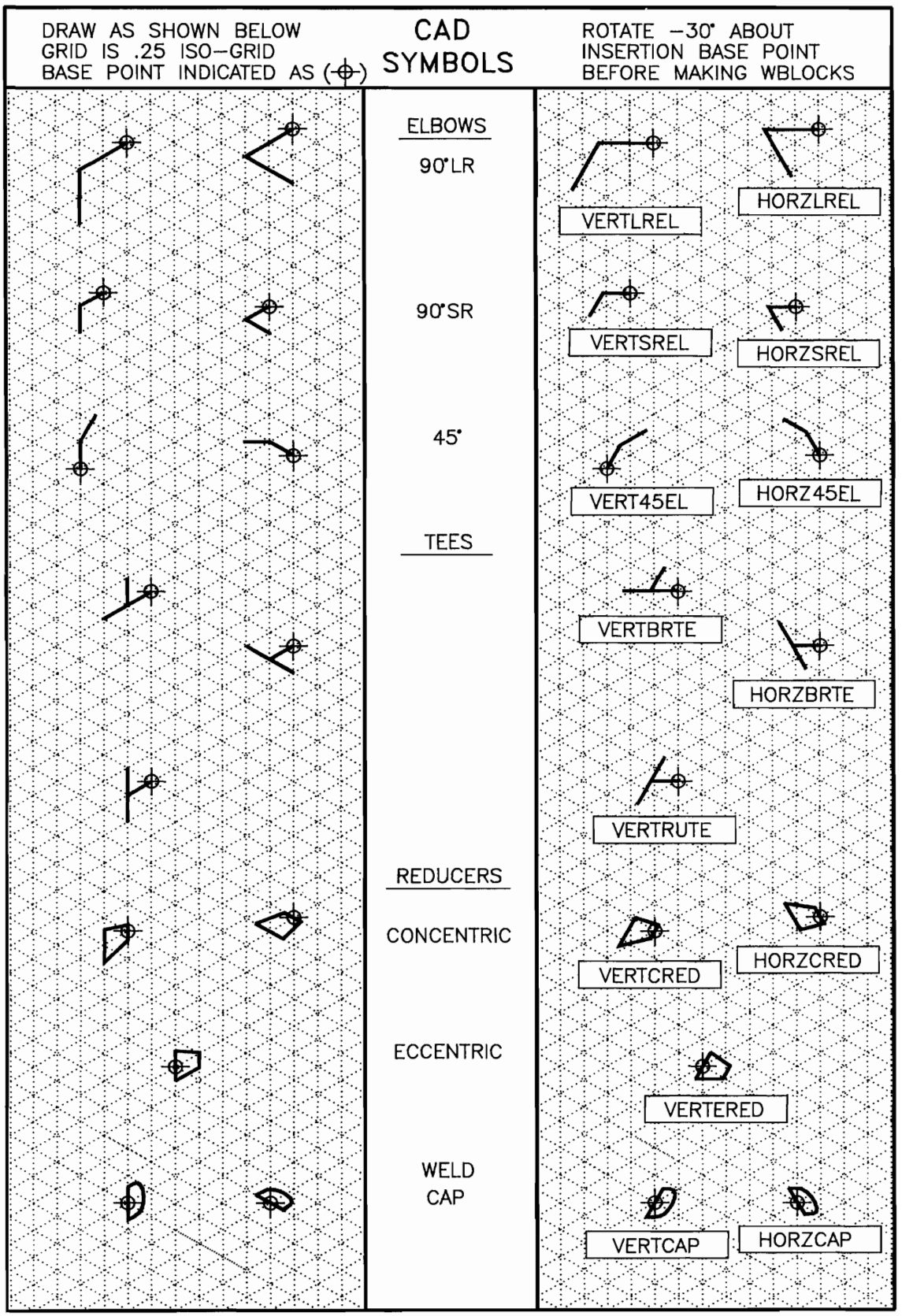

Figure 13-7. AutoCAD isometric piping symbols.

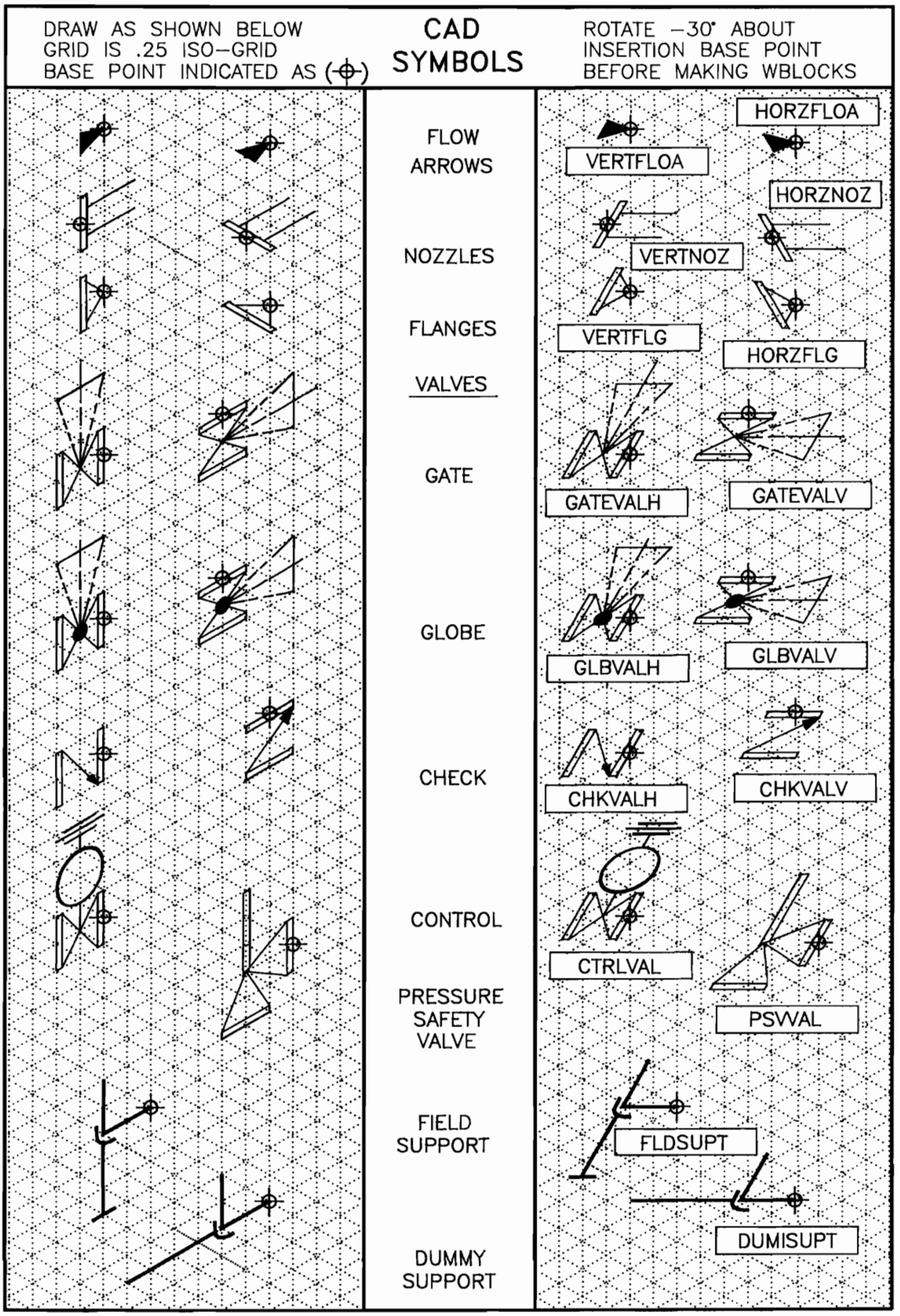

Figure 13-7. *Continued.*

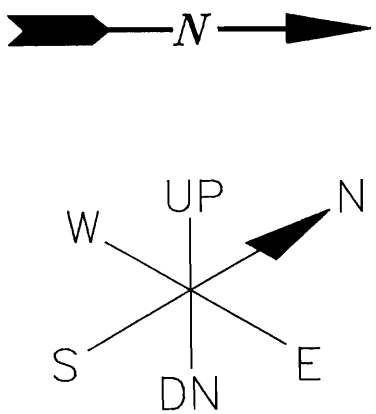

Figure 13-8. Orthographic and isometric north arrows.

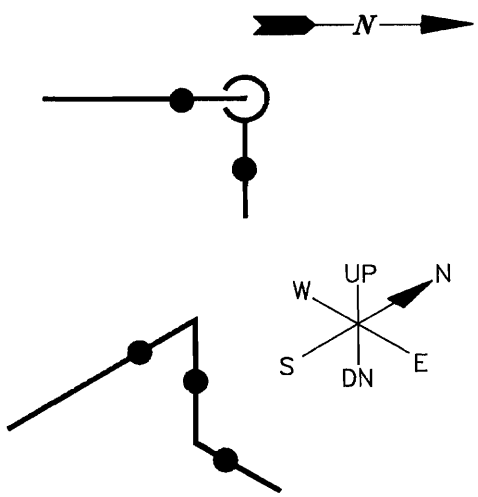

Figure 13-9. Isometric configuration.

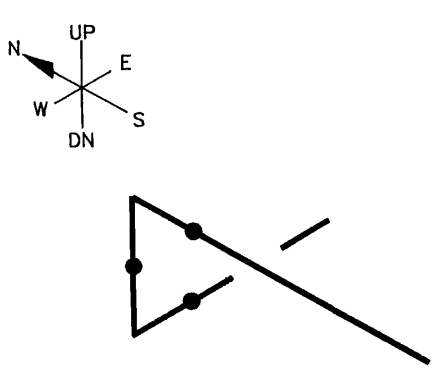

Figure 13-10. Alternate north arrow direction.

DRAWING PIPING ISOMETRICS

As an isometric for a particular line is developed, constant reference to the piping arrangement, section, or elevation drawings is essential. Drawing symbols, callouts, coordinates, and elevations provide detailed information of the pipe's configuration and routing through the unit. By using this information and the isometric symbols that correspond to the various orthographic drawing symbols the pipe drafter can render an isometric describing the pipe's routing. Remember, the isometric must provide a detailed description of the pipe's routing from beginning to end. However, this does not apply to a pipe in a piperack. Piping isometrics are generally drawn to represent the configuration up to and including the first fitting in the piperack. Use the procedure that follows to render a piping isometric for line 01-2-C30-10″.

As shown in Figure 13-11, line 01-2-C30-10″ is attached to vessel V-101 at nozzle **N1** and nozzle **C** of vessel E-101. The line begins at nozzle **N1** with a flange and elbow welded together, fitting make-up. The elbow is oriented toward the north according to the north arrow. If line 01-2-C30-10″ turns north on the arrangement drawing, it must also be shown turning north on the iso. To determine the distance a pipe travels in the north direction, or any other horizontal plane, one must establish the length using two coordinates. If there were a need to determine the distance a pipe travels in a vertical plane, a drafter would need one of the following: elevation callouts (found on the plan view drawing) or an elevation drawing that graphically depicts the amount of vertical change. Remember, horizontal dimensions are calculated using coordinates and vertical dimensions are calculated using elevations. Also, recall elevation changes can be shown on the piping arrangement drawing in the form of callouts, but the elevation callouts must be adequate enough to determine the length of the pipe traveling in the vertical plane.

After the north run, an elbow turns west and line 01-2-C30-10″ travels below vessel E-101. Notice the elbow is also shown turning west on the iso. When the pipe aligns with the centerline of E-101, another elbow turns the line up and into nozzle **C.** Isometric drawing symbols for 90° and 45° elbows are typically shown with square corners, as opposed to the round corners found on arrangement drawings. However, it is not unusual for some companies and some CAD software packages to draw elbow symbols with round corners. When a pipe is connected to a piece of equipment, nozzles are shown double line. Other details about the equipment are shown in Figure 13-11.

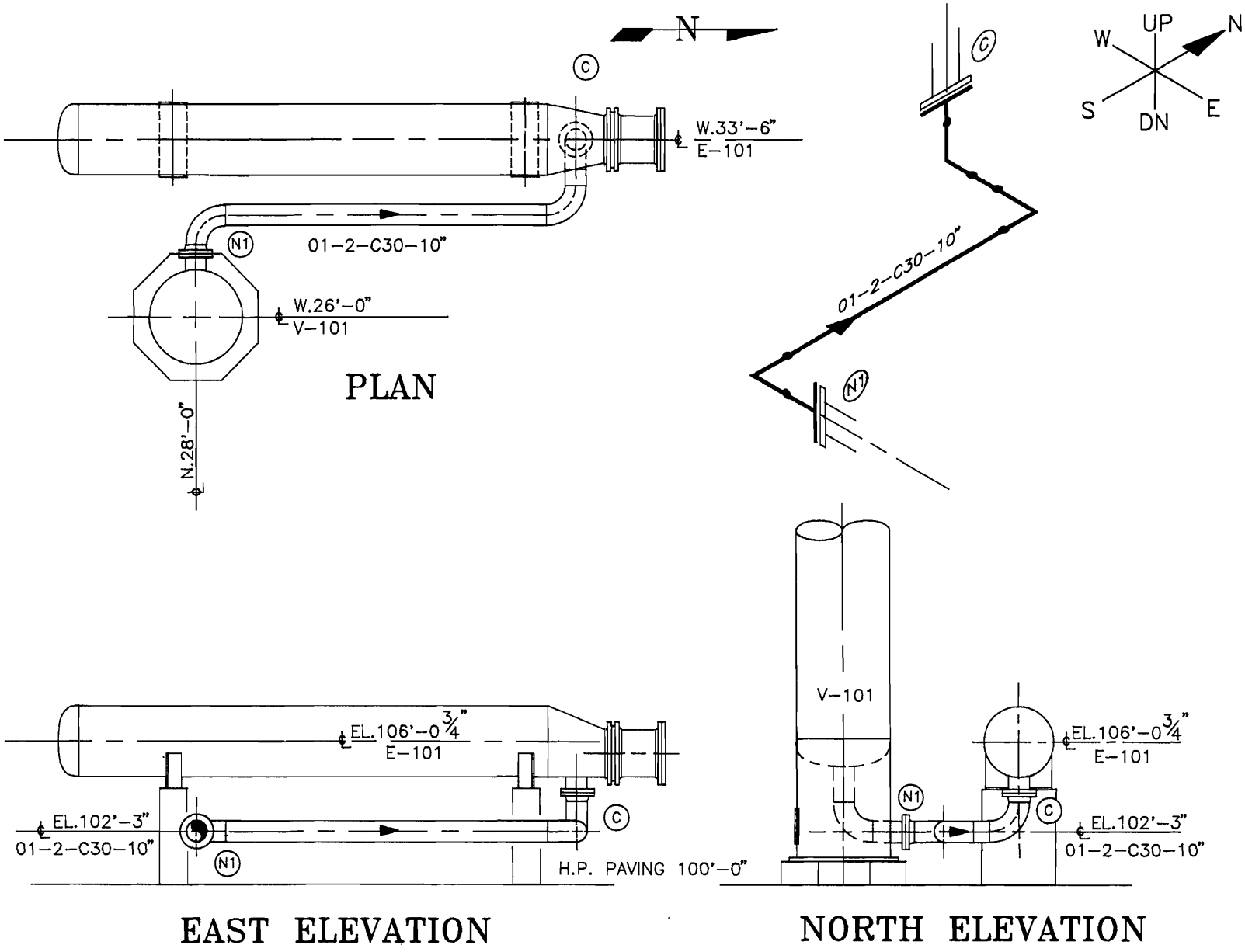

Figure 13-11. Line 01-2-C30-10".

They include intersecting coordinates for the center of the equipment, nozzle elevation, and nozzle number.

ISOMETRIC DIMENSIONS, NOTES, AND CALLOUTS

Isometric Dimensions

Length dimensions and informational notes or callouts are used on isometrics to define the pipe's exact routing through a facility. Placement of dimensions on the drawing establishes precise lengths between fittings, valves, equipment connections, etc. Information such as coordinates, elevations, nozzle projection, pipe size, and pound rating are used to calculate lengths of a run of pipe. As with orthographic views, dimensions are placed on isometrics that indicate center-to-center, center-to-face, and face-to-face measurements. Figure 13-12 provides dimensions for line 01-2-C30-10″ using information found on the plan and elevation views shown in Figure 13-11 and the equipment vendor drawings found in Chapter 6, Mechanical Equipment.

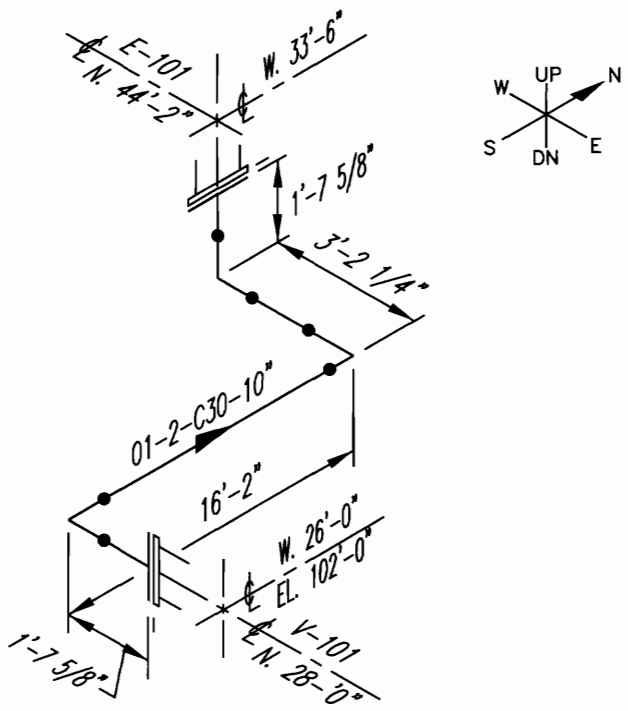

Figure 13-12. Line 01-2-C30-10″ dimensions.

Placing dimensions on a piping isometric with **AutoCAD** requires the use of the *Aligned* and *Oblique* options within the **DIMENSION** command. Figure 13-13 provides two alternatives for placing dimensions on piping isometrics. Dimensions should be aligned with the routed pipe and obliqued as shown in Figure 13-14.

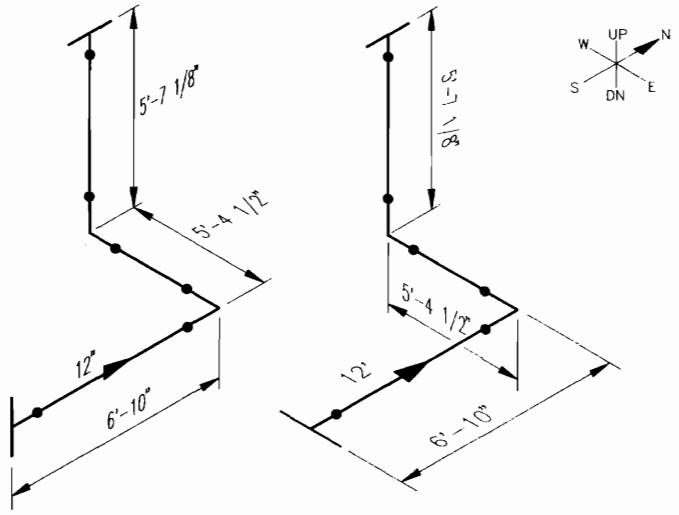

Figure 13-13. Dimensioning alternatives.

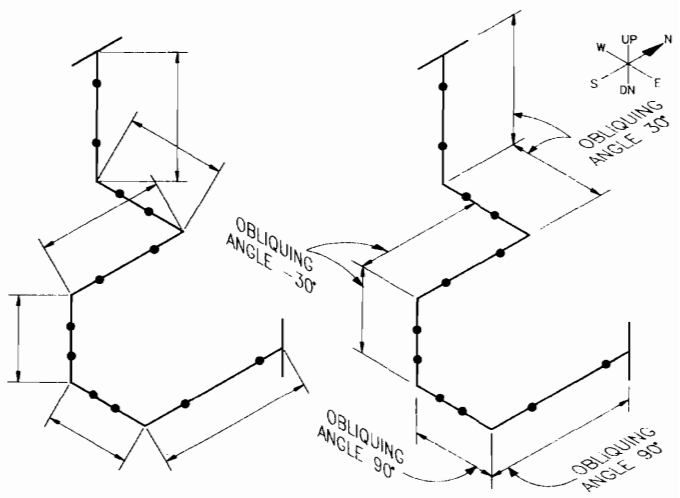

Figure 13-14. Aligned and obliqued dimensions.

Isometric Notes and Callouts

Dimensions cannot provide all the information required to properly describe a piping isometric. Notes and callouts placed on the drawing provide significant information that may impact the purchase, fabrication, and erection of the configuration. Notes are used to denote pipe size and pound rating of fittings, flanges, and valves. Notes also specify insulation type and thickness, locations for pipe guides, anchors, or supports, as well as offset angles. Callouts stipulate instrumentation locations and size, specification breaks, and fabrication details. Any information that is pertinent to a particular pipe must be conveyed on the isometric.

Whether dimensioning or placing notes on an iso, all written information should remain on one of the isometric axes and inclined to the right. This task becomes a little more difficult when drawing with **AutoCAD.** To achieve the proper obliquing and rotation angles required on CAD generated isometrics, create the text style outlined in the following procedures.

Step 1. Use the **STYLE** command to create two different text styles. Use the style names ISOTEXT-1 and ISOTEXT-2 for easy reference.

Step 2. When creating ISOTEXT-1, set the *obliquing angle* to +30°. For ISOTEXT-2 set the *obliquing angle* to –30°.

Step 3. Depending upon the **ISOPLANE** being used, set the *rotation angle* in the **DTEXT** command to the appropriate setting as represented in Figure 13-15.

ISOMETRIC OFFSETS

Isometric offsets are formed when a pipe turns at any angle other than a 90° angle. Angular offsets can be created by rolling a 90° elbow at any angle or replacing 90° elbows with 45° elbows. The result would be pipes that no longer travel north, south, east, west, up, or down. Instead lines would run northwest, northeast, southeast, or southwest. They could also slant upward or downward. Several examples of isometric offsets are shown in Figure 13-16. Dimension lines and callouts are included as a reference. To establish proper visual orientation, the indication of horizontal (HOR) or vertical (VERT) angles are included on all isometric offsets. Forty five degree elbows must always be labeled on an iso for material take-off purposes.

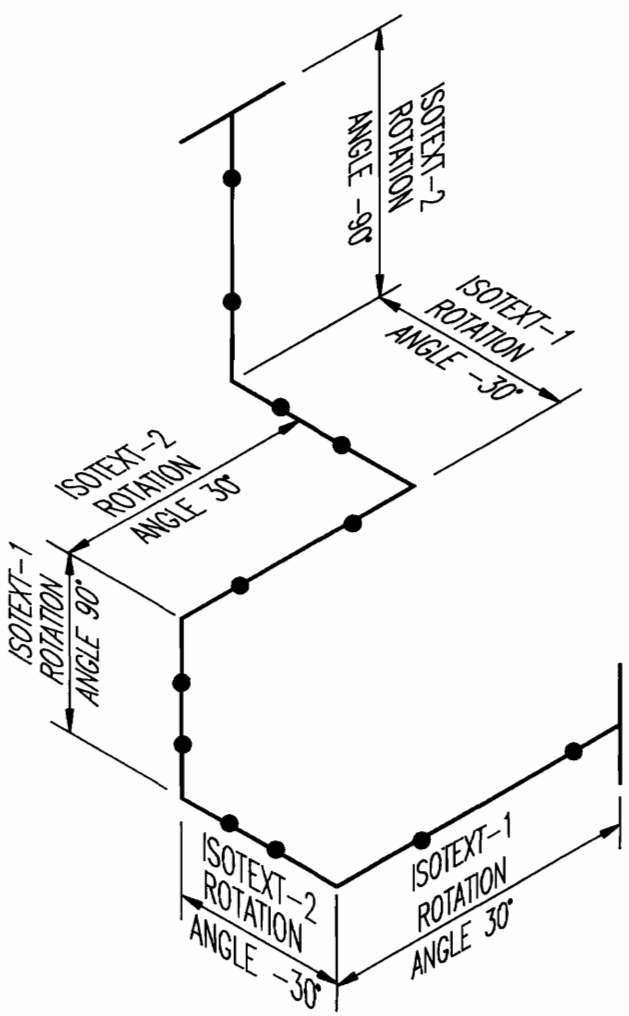

ISOMETRIC DIMENSIONS AND TEXT CALLOUTS

SET UP TWO TEXT STYLES FOR ISOMETRIC DIMENSIONS AND CALLOUTS.

ISOTEXT–1 SET OBLIQUING ANGLE 30°

ISOTEXT–2 SET OBLIQUING ANGLE –30°

NOTE: AS YOU ENTER THE TEXT YOU WILL NEED TO ADJUST THE ROTATION ANGLE AS SHOWN.

Figure 13-15. Isometric text.

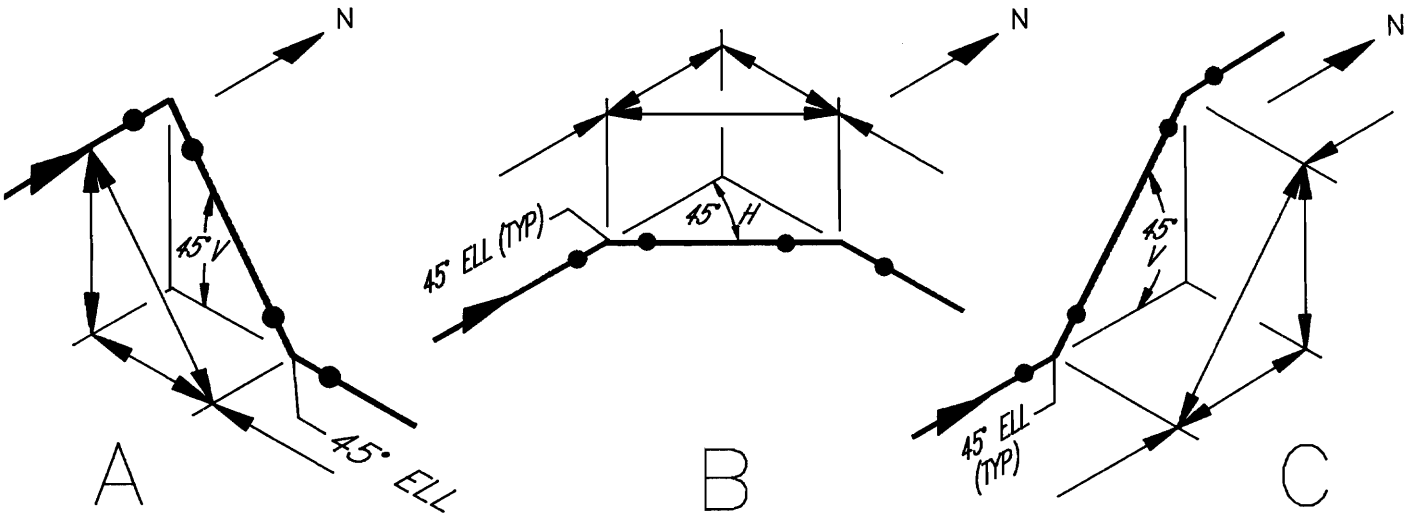

Figure 13-16. Isometric offsets.

Figure 13-16 represents only three of the many offsets that can be created using 90° and 45° elbows. Example **A** of Figure 13-16 begins with a line traveling north. A 90° elbow is rolled downward and toward the east at a 45° angle. A 45° elbow is required to return the angular offset to a due easterly direction. This example is labeled as a vertical offset because a change in elevation occurs when the 90° elbow is turned downward. Example **C** is also a vertical offset, but notice, there is no change in the geographic direction the pipe travels. Here, two 45° elbows are used to angle the pipe upward while continuing in a northerly direction. Both elbows are 45°, thus, the inclusion of the abbreviation **TYP,** meaning "typical." Example **B** demonstrates how horizontal offsets are created. As with example **C,** two 45° elbows are used, but rather than turning the elbows upward, they are laid on their side and do not change elevation.

Dimensioning Offsets

With isometric offsets changing a pipe's routing from one plane to another or from one geographic direction to another, coordinates and elevations no longer provide all the dimensions necessary to describe a pipe's total length. However, the use of 90° and 45° elbows to form the offsets results in a problem that can be easily solved with simple mathematical formulas. The 90° and 45° elbows form right triangles. By using Pythagorean's Theorem that states that the sum of the squares of the two sides is equal to the square of the triangle's hypotenuse, this problem can be solved. Simply stated, $A^2 + B^2 = C^2$. Figure 13-17 identifies the sides and angles of a right triangle and their resulting solution formulas.

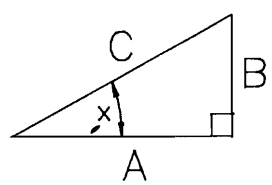

$$A^2 + B^2 = C^2$$

$$C = \sqrt{A^2 + B^2}$$

$$A = \sqrt{C^2 - B^2}$$

$$B = \sqrt{C^2 - A^2}$$

Figure 13-17. Pythagorean's theorem formulas.

These formulas can be used to solve for the length of an unknown side when the other two sides are known. They work no matter the degree value of angle **X.** Some angles seem to be used repeatedly in pipe drafting. The chart in Figure 13-18 can significantly reduce the amount of time spent on calculating unknown sides of right triangles. Use the appropriate decimal value when **X** is one of the provided angles.

As mentioned previously, 90° elbows can be rolled to form any degree of angular offset. To fabricate such a roll, a pipe fitter should be provided with the lengths of the three sides of the triangle and the degree value of angle **X.** Solving for an unknown value of **X** requires some additional trigonometric formulas. Use the formulas provided in Figure 13-19 to solve for the unknown value of angle **X.** Notice that, relative to **X,** side **A** is identified as the side adjacent (SA), side **B** is identified as the side opposite (SO), and side **C** is identified as the hypotenuse (HYP).

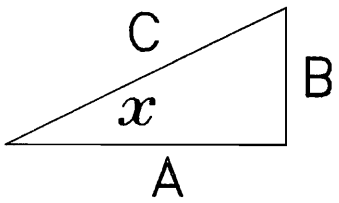

RIGHT TRIANGLE MULTIPLICATION FACTORS

TO FIND SIDE	WHEN YOU KNOW SIDE	MULTI-PLY SIDE	WHEN 'x' IS 15°	WHEN 'x' IS 30°	WHEN 'x' IS 45°	WHEN 'x' IS 60°	WHEN 'x' IS 75°
C	A	A	1.0353	1.1547	1.4142	2.0000	3.8637
C	B	B	3.8637	2.0000	1.4142	1.1547	1.0353
A	B	B	3.7320	1.7320	1.0000	.5773	.2680
A	C	C	.9659	.8660	.7071	.5000	.2588
B	A	A	.2680	.5773	1.0000	1.7320	3.7320
B	C	C	.2588	.5000	.7071	.8660	.9659

Figure 13-18. Decimal equivalents of common angles.

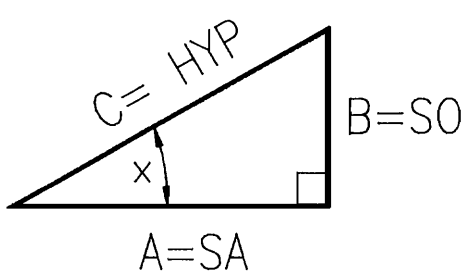

SA= HYP (COS x)	SO= HYP (SIN x)	HYP= SA (SEC x)
SA= SO (COT x)	SO= SA (TAN x)	HYP= SO (CSC x)
$SA = \frac{SO}{TAN\ x}$	$SO = \frac{SA}{COT\ x}$	$HYP = \frac{SO}{SIN\ x}$
$SA = \frac{HYP}{SEC\ x}$	$SO = \frac{HYP}{CSC\ x}$	$HYP = \frac{SA}{COS\ x}$

$SIN\ x = \frac{SO}{HYP}$ $\quad COS\ x = \frac{SA}{HYP}$ $\quad TAN\ x = \frac{SO}{SA}$ $\quad COT\ x = \frac{SA}{SO}$

Figure 13-19. Formulas for solving angle **X**.

Multiple Angle Offsets

Elbows are not the only piping components installed in angular positions. Nozzles are placed on vessels in locations where interferences are least likely to occur. As a result, nozzles oriented at angles of 10°, 20°, 35°, etc., are not uncommon. When offset or rolled elbows are added, complex math problems often result. Multiple angle configurations, such as the one in Figure 13-20, require additional calculations to determine dimensions for its length of pipe.

We have already seen how unknown lengths can be solved using right triangle formulas. The key to solving the unknown length dimension in Figure 13-20 is the incorporation of right triangles. Remember, drawing space is limited. Excessive notes, callouts, and dimensions are not practical. As with dimensions, the right triangles are positioned so their lengths establish center-to-center measurements: center-of-vessel, to center-of-elbow, to centerline-of-vessel. The length of the unknown dimension can only be solved by using the limited information available in Figure 13-20. Figure 13-21 demonstrates the way to position three right triangles to solve for the unknown dimension.

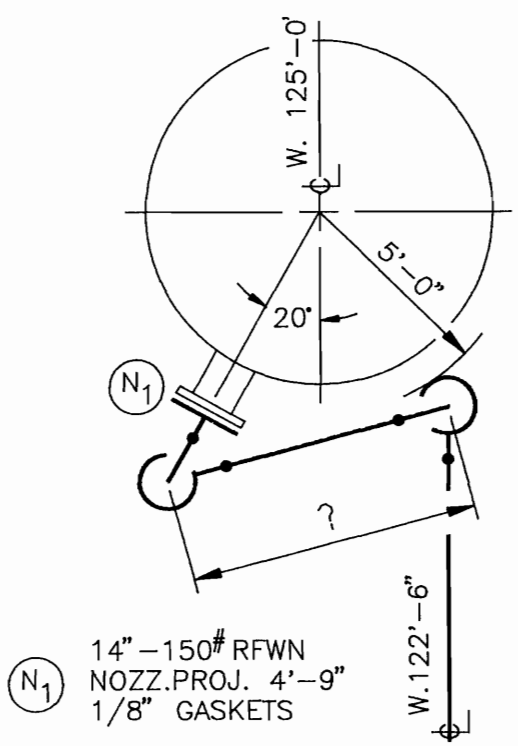

Figure 13-20. Multiple angle offsets.

Numbering the triangles will aid in the discussion of solving for the sides of each triangle. The unknown dimension is equivalent to the hypotenuse of triangle **3.** Begin by determining the known values for each of the triangles from the information provided in Figure 13-20. Figure 13-22 shows the known values of triangles **1, 2,** and **3** placed in their appropriate locations.

The **X** angle for triangle **1** is shown to be 20°. The 6′-11 ⅛″ dimension is a total of the nozzle projection for nozzle **N1,** gasket, 150# flange, and 14″ elbow. On triangle **2,** the 2′-6″ measurement is determined by subtracting the two west coordinates. The 5′-7″ dimension is established by adding ½ of the OD of the 14″ pipe to the 5′-0″ dimension. There are no known dimensions for triangle **3.** Remember a minimum of two values must be known in order to solve the missing lengths or angle of a triangle. By determining the side adjacent (SA) and side opposite (SO) of triangle **3,** Pythagorean's theorem can be applied to find the hypotenuse, the unknown dimension.

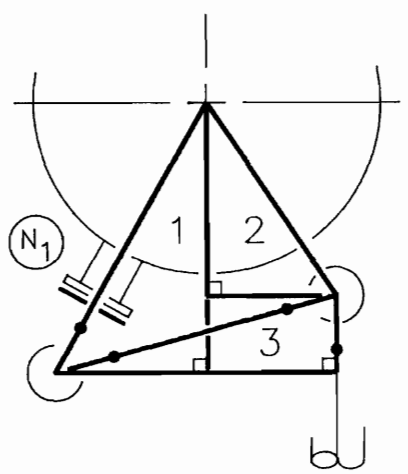

Figure 13-21. Locating right triangles.

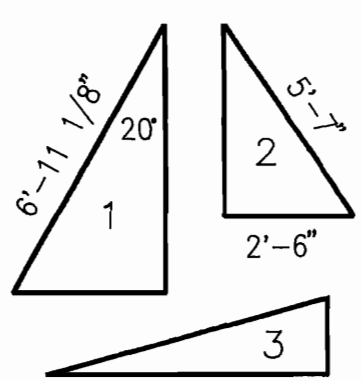

Figure 13-22. Known values for triangles **1, 2, and 3.**

Using the available formulas, the missing lengths of triangles **1** and **2** must be solved before the sides of triangle **3** can be determined. Notice that by subtracting the SA of triangle **2** from the SA of triangle **1,** the SO of triangle **3** can be determined. Also, adding the SO of triangle **1** to the SO of triangle **2** (2′-6″) will yield the SA of triangle **3.** The results of these calculations are shown in Figure 13-23. The length of the unknown dimension is 5′-1 3/16″. Angle **X** of triangle **3** is also an important value to be determined. This angle establishes the rotation angle for the 90° elbows. In the fabrication shop, the vessel is not available to measure the 5′-0″ dimension. Knowing this horizontal angle is the only way the elbows can be correctly installed.

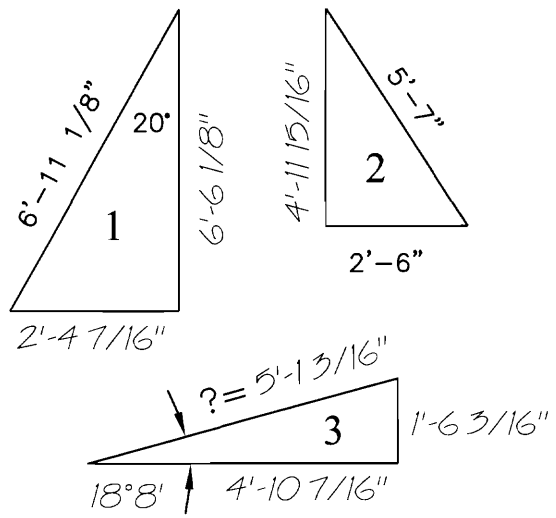

Figure 13-23. Solutions for triangles **1, 2, and 3.**

Rolling Offsets

The culmination of the isometric offset is the rolling offset. The rolling offset is a compound offset formed by replacing the two 90° elbows in Figure 13-20 with two 45° elbows. The result is an offset that changes elevation and direction simultaneously. Figure 13-24 shows the plan and elevation views of a rolling offset.

Because of its complexity, adequate dimensions cannot be placed on the orthographic views that fully describe the rolling offset. An isometric is the best place for representing and dimensioning the rolling offset. Rather than a horizontal or vertical triangle, the rolling offset requires an isometric box for proper dimensioning. Figure 13-25 shows construction of this box and its accompanying dimensions.

Combining elevational and directional changes compounds the difficulty in representing the rolling offset on an isometric drawing. Visualizing directional changes on the plan view and elevation view simultaneously requires practice and patience. To aid in this visualization process, some helpful notes have been added to the plan and elevation views of the rolling offset shown in Figure 13-26. In the plan view, a box has been drawn through the centers of the two 45° elbows that form the rolling offset. Its corners have been labeled northeast, northwest, southwest, and southeast. The notes in the elevation view identify upper and lower planes. Remember the plan view shows north, south, east, west orientation and the elevation view depicts vertical changes in elevation.

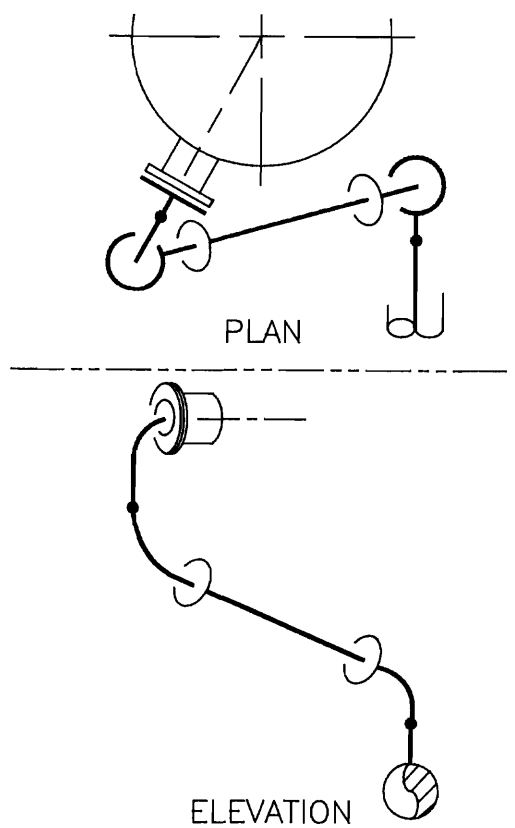

Figure 13-24. Plan and elevation views of a rolling offset.

The plan view in Figure 13-26 shows that the pipe enters the box from the southwest corner and travels to the northeast corner where it ends with a flange. Looking at the elevation view, we can see the pipe beginning on the upper plane and dropping down to the lower plane. By combining the information from these two views, we know that the pipe begins in the upper southwest corner and travels down to the lower northeast corner. The resulting isometric representation is shown in Figure 13-27.

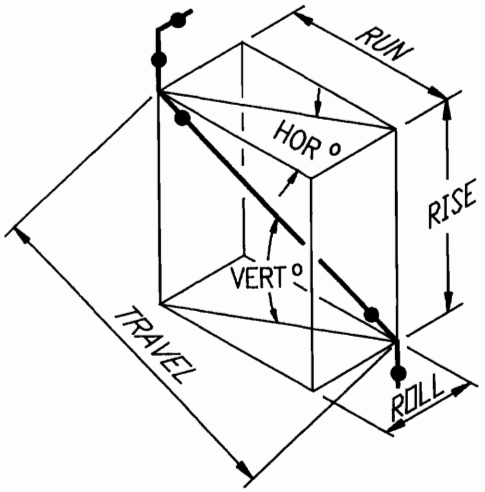

Figure 13-25. Rolling offset box.

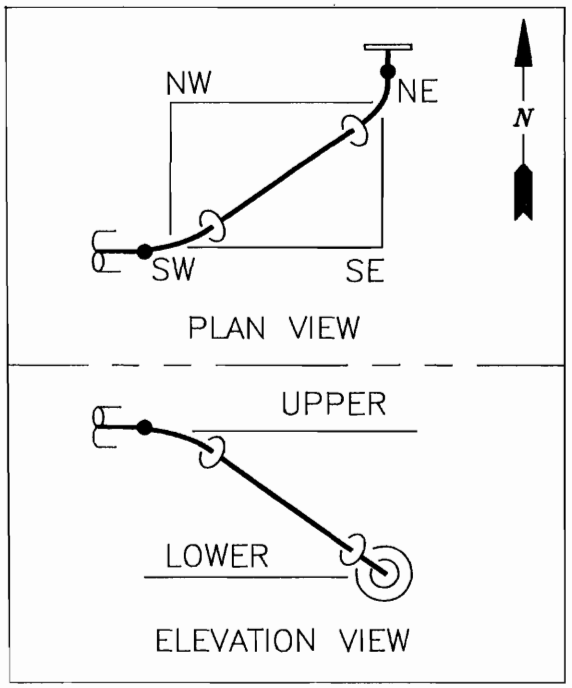

Figure 13-26. Visualization aids for rolling offsets.

Dimensioning Rolling Offsets

Figure 13-25 identifies the six measurements required to dimension a rolling offset. There are four length dimensions and two angular dimensions. When a rolling offset is part of a configuration similar to that shown in Figure 13-28, the lengths of the sides of triangle **3** are applied to the dimensions of the isometric box (see Figure 13-25). Notice the SA of triangle **3** in Figure 13-28 is equal to the **RUN** of the box, the **ROLL** of the box is equal to the SO of triangle **3**, and angle **X** of triangle **3** is the same as the horizontal angle (HOR°).

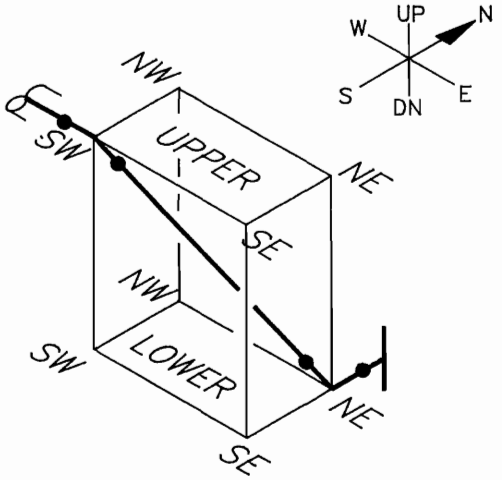

Figure 13-27. Isometric of rolling offset.

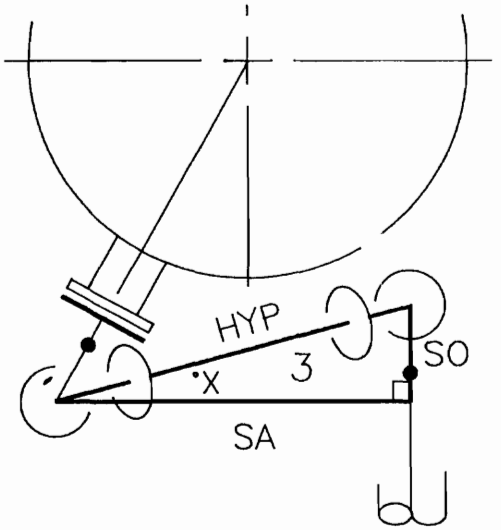

Figure 13-28. Rolling offset with right triangles.

The **RISE** is determined by subtracting the lower plane elevation from the upper plane elevation. Rolling offsets are typically fabricated using 45° elbows; therefore, the vertical angle will be 45°. Notice the dimension labeled **TRAVEL** in Figure 13-25. It establishes the true length of the pipe from the upper plane to lower plane across the box. This length is the most difficult to calculate. The values used to determine its length depend on how the pipe enters and exits the isometric box. Figure 13-29 shows the two examples of the ways pipes enter and exit the isometric box.

In example **A**, the pipe enters and exits the isometric box in the vertical plane. Example **B** shows the pipe to enter and exit the box in the horizontal plane. When a pipe enters and exits in the vertical direction, a 45° angle is formed between the **TRAVEL** and a dashed line drawn diagonally across the bottom of the box (hypotenuse of

triangle 3). When a pipe enters and exits in the horizontal direction, a 45° angle is formed between the **TRAVEL** and the **RUN** of the box. Depending on the type, vertical or horizontal, two different 45° right triangles will be formed. The **TRAVEL** of the pipe becomes the hypotenuse for either triangle. When solving a right triangle whose angle is 45°, the SA and SO will always be equal. As you can see in example **A**, the length of the dashed line is equal to the **RISE** of the box, and in example **B**, the dashed line drawn diagonally across the end of the box is equal to the **RUN** of the box. Once the SA and SO lengths of the 45° right triangle are known, Pythagorean's theorem can be used to easily solve the **TRAVEL** dimension of the pipe. Since 45° is a commonly used angle, Figure 13-18 can also be used.

The chart in Figure 13-30 converts inches into decimals. Multiplication and division of fractions is simplified using decimal equivalents. This chart is extremely helpful when performing mathematical calculations on a calculator that is limited to decimal input only.

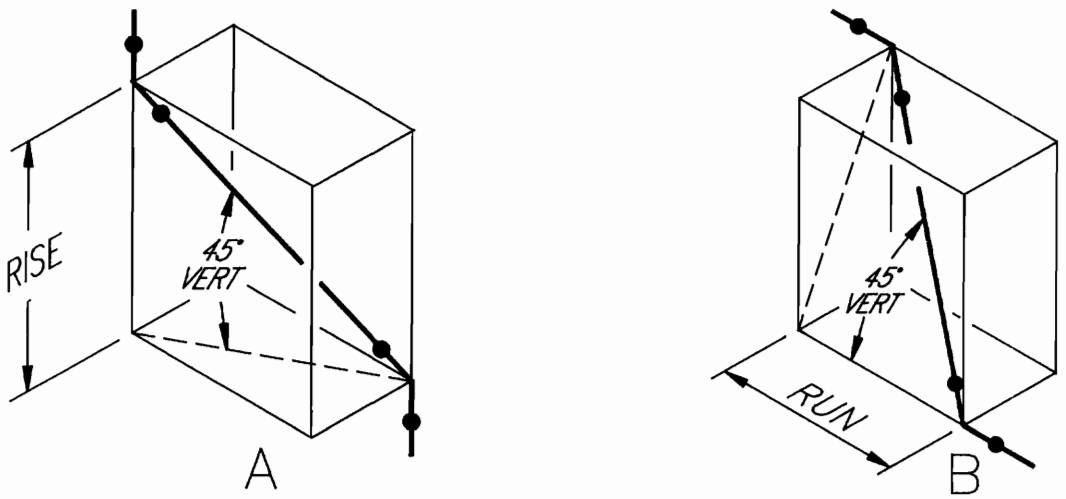

Figure 13-29. Vertical and horizontal pipes relative to the isometric box.

FRACTIONS	DECIMALS OF A FOOT													FRACTIONS	DECIMALS OF AN INCH
	0"	1"	2"	3"	4"	5"	6"	7"	8"	9"	10"	11"	12"		
	.0000	.0833	.1667	.2500	.3333	.4176	.5000	.5833	.6667	.7500	.8333	.9167	----		
1/16"	.0052	.0085	.1719	.2552	.3385	.4219	.5052	.5885	.6719	.7552	.8385	.9219		1/16"	.0625
1/8"	.0104	.0937	.1771	.2604	.3437	.4271	.5104	.5937	.6771	.7604	.8437	.9271		1/8"	.1250
3/16"	.0156	.0990	.1823	.2656	.3490	.4323	.5156	.5990	.6823	.7656	.8490	.9323		3/16"	.1875
1/4"	.0208	.1042	.1875	.2708	.3542	.4375	.5208	.6042	.6875	.7708	.8542	.9375		1/4"	.2500
5/16"	.0260	.1093	.1927	.2760	.3594	.4427	.5260	.6094	.6927	.7760	.8594	.9427		5/16"	.3125
3/8"	.0312	.1146	.1979	.2812	.3646	.4479	.5312	.6146	.6979	.7812	.8646	.9479		3/8"	.3750
7/16"	.0365	.1198	.2031	.2865	.3698	.4531	.5365	.6198	.7031	.7865	.8698	.9531		7/16"	.4375
1/2"	.0417	.1250	.2083	.2917	.3750	.4583	.5417	.6250	.7083	.7917	.8750	.9583		1/2"	.5000
9/16"	.0468	.1302	.2135	.2969	.3802	.4635	.5469	.6302	.7135	.7969	.8802	.9635		9/16"	.5625
5/8"	.0521	.1354	.2187	.3021	.3854	.4687	.5521	.6354	.7187	.8021	.8854	.9687		5/8"	.6250
11/16"	.0573	.1406	.2240	.3073	.3906	.4740	.5573	.6406	.7240	.8073	.8906	.9740		11/16"	.6875
3/4"	.0625	.1458	.2292	.3125	.3958	.4792	.5625	.6458	.7292	.8125	.8958	.9792		3/4"	.7500
13/16"	.0677	.1510	.2344	.3177	.4010	.4844	.5677	.6510	.7344	.8177	.9010	.9844		13/16"	.8125
7/8"	.0729	.1562	.2396	.3239	.4062	.4896	.5729	.6564	.7396	.8229	.9062	.9896		7/8"	.8750
15/16"	.0781	.1615	.2448	.3281	.4115	.4948	.5781	.6615	.7448	.8281	.9115	.9948		15/16"	.9375

Figure 13-30. Inch to decimal conversion chart.

CHAPTER 13 REVIEW QUIZ

1. What is an isometric?

_____

_____

2. Which three dimensions found in orthographic views are required when drawing an isometric?

_____

_____

3. What is material take-off?

_____

_____

4. T F Pipe 14″ and above is drawn double line on an isometric.
5. T F Multiple pipes are drawn on a single sheet of isometric grid vellum.
6. T F All isometrics are drawn to scale to show exact size and pound rating.
7. T F Lengths of pipe should be drawn proportionally on an isometric.
8. T F Symbols should be drawn different sizes to reflect a change in pipe size.
9. What is the preferred direction to draw the north arrow on an isometric?

_____

_____

10. What are placed on isometrics to define the pipe's exact routing through a facility?

_____

_____

11. How are isometric offsets formed?

_____

_____

12. To establish proper visual orientation, the indication of _____ or _____ angles are included on all isometric offsets.
13. State Pythagorean's theorem. _____

_____

14. What are the names of the three sides of a right triangle?

_____

_____

15. Name the six dimensions required on a rolling offset box.

_____

_____

DRAWING EXERCISES

Draw an isometric for each of the following exercises. Show all dimensions, coordinates, equipment callouts, line numbers, and related information is required. North arrow direction will be assigned.

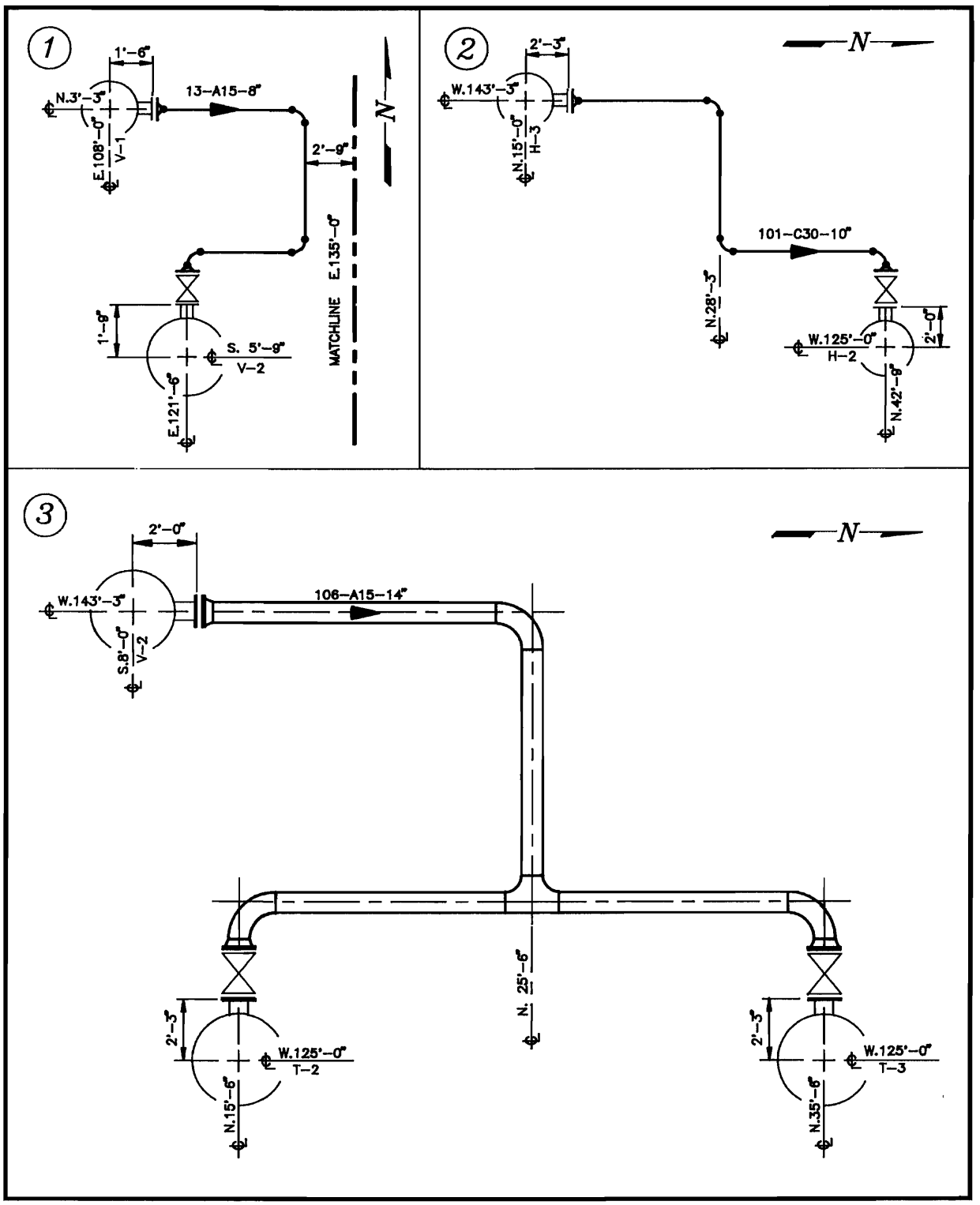

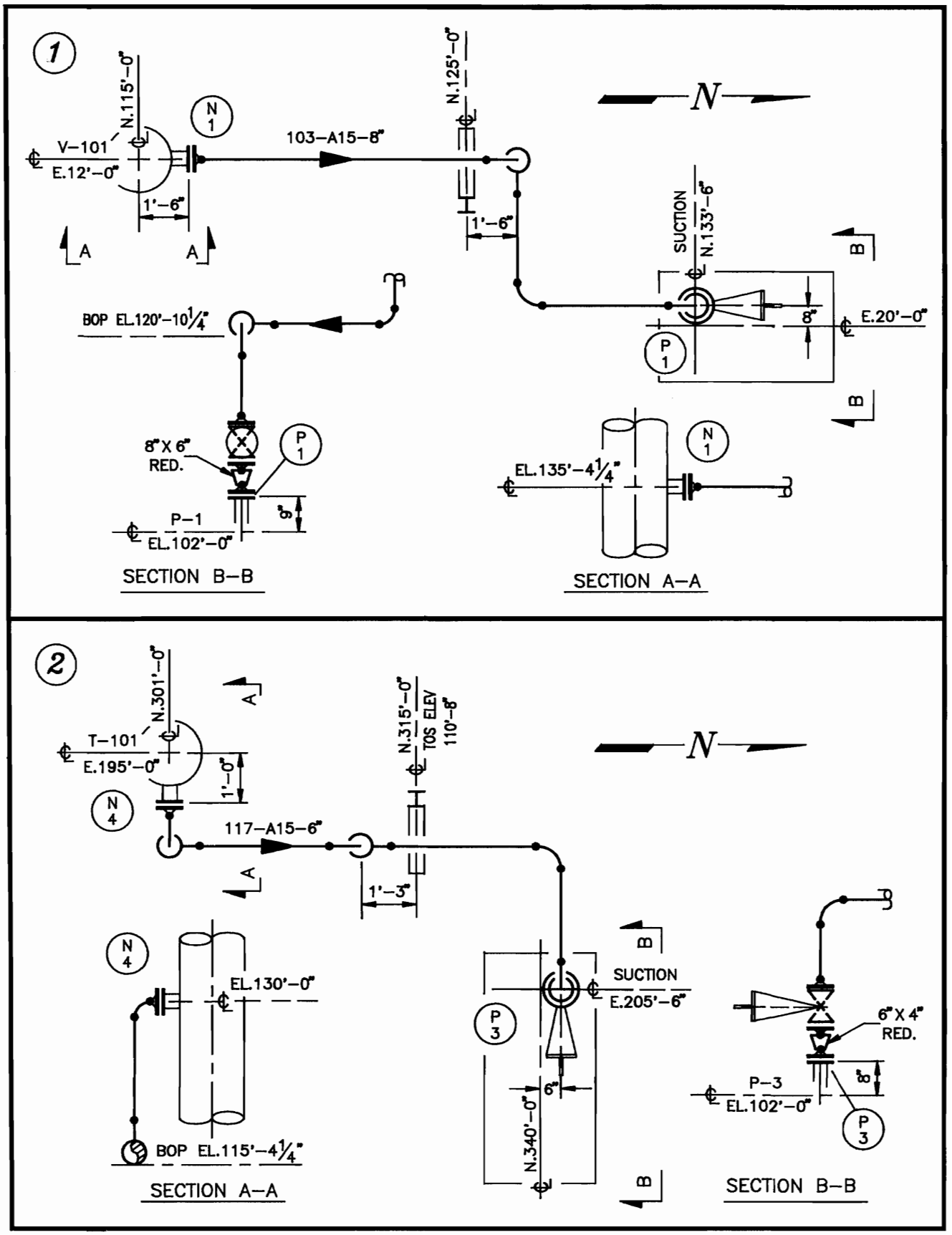
1
N.115'-0"
N.125'-0"
N
N 1
V-101
E.12'-0"
103-A15-8"
1'-6"
1'-6"
A
A
SUCTION
N.133'-6"
B
BOP EL.120'-10¼"
8"
E.20'-0"
P 1
B
8"X 6" RED.
P 1
N 1
EL.135'-4¼"
P-1
EL.102'-0"
8"
SECTION B-B
SECTION A-A
2
N.301'-0"
A
N.315'-0"
TOS ELEV 110'-8"
N
T-101
E.195'-0"
1'-0"
N 4
117-A15-6"
A
1'-3"
B
N 4
EL.130'-0"
SUCTION
E.205'-6"
P 3
6"X 4" RED.
6"
8"
P-3
EL.102'-0"
P 3
N.340'-0"
BOP EL.115'-4¼"
B
SECTION A-A
SECTION B-B

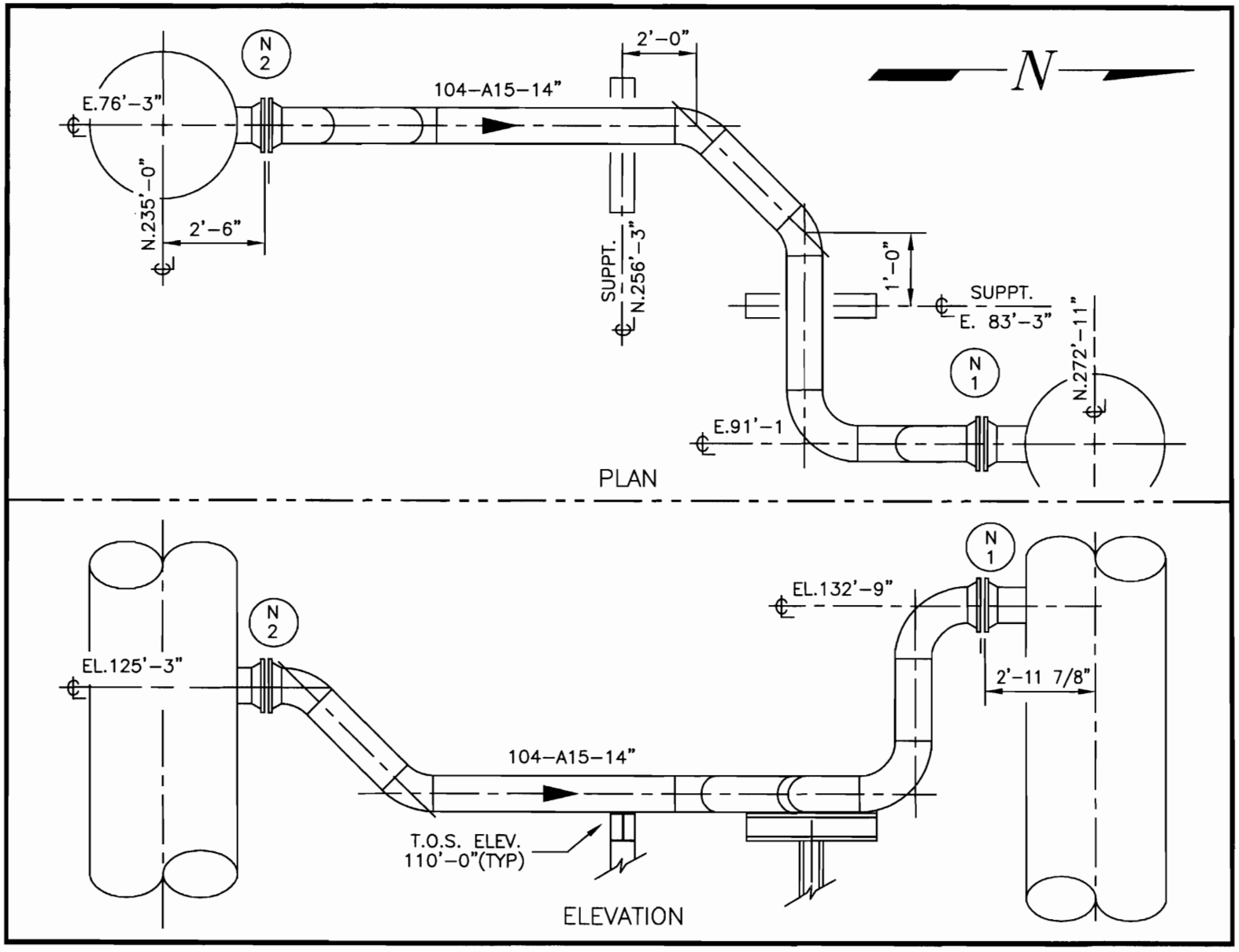
N
2
2'-0"
104-A15-14"
E.76'-3"
N.235'-0"
2'-6"
SUPPT.
N.256'-3"
1'-0"
SUPPT.
E. 83'-3"
N
1
N.272'-11"
E.91'-1
PLAN
N
1
EL.132'-9"
N
2
EL.125'-3"
2'-11 7/8"
104-A15-14"
T.O.S. ELEV.
110'-0"(TYP)
ELEVATION

Solve for the missing dimensions on each of the rolling offset dimensioning boxes shown below. Show all dimensions in feet/inches, rounded to the nearest 1/16″.

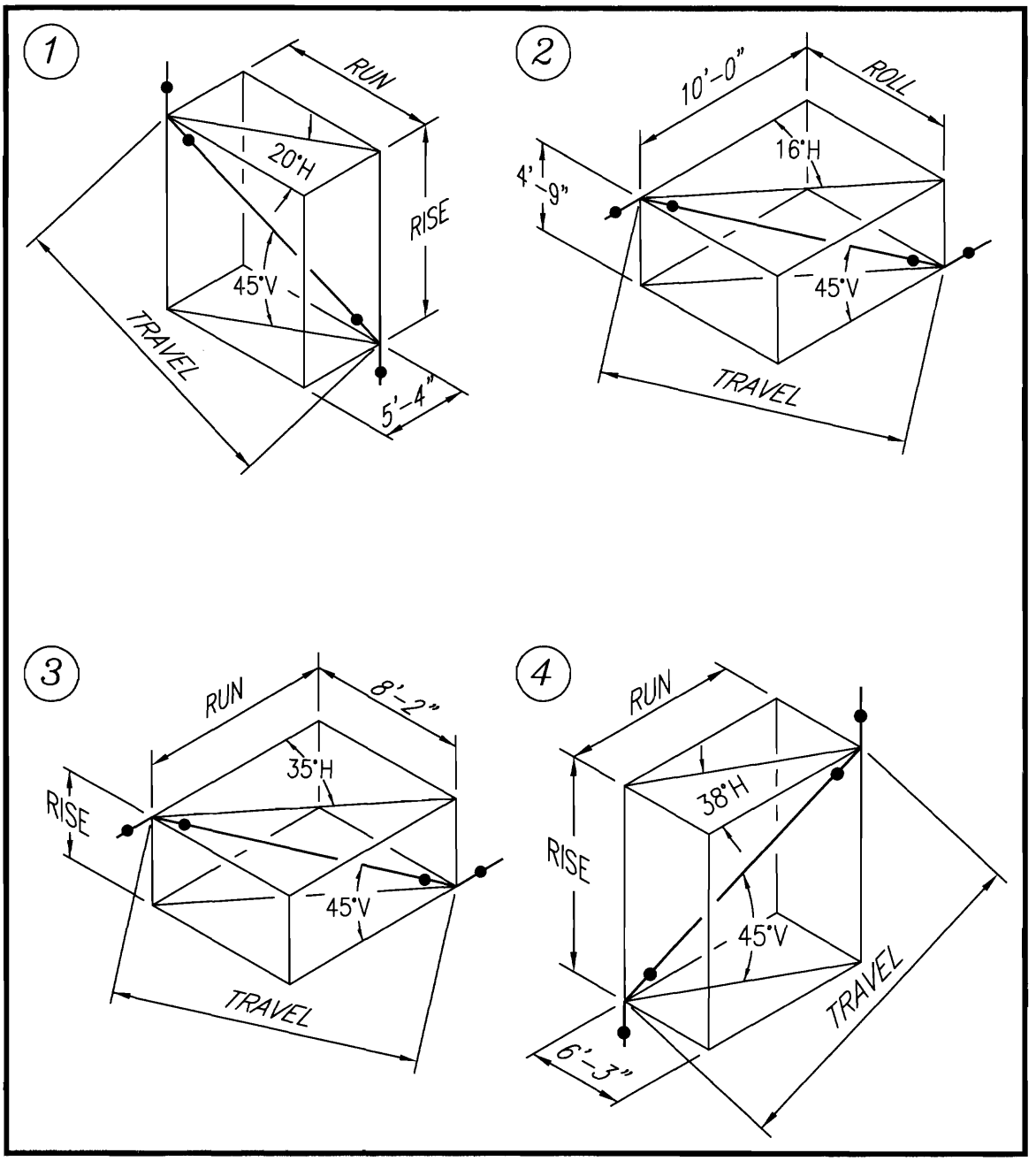

Customizing AutoCAD

Efficiency can be described as the quantity and quality at which a desired result is attained. Productivity, likewise, measures the amount of return compared to the amount of effort. For anyone to be efficient and productive careful attention must be paid to the techniques and procedures they use to perform their tasks. The inclusion of **AutoCAD** into the design process has made designers and drafters more efficient at performing their tasks. Some simple modifications to **AutoCAD** techniques also can be made to enhance the efficiency and productivity of **AutoCAD** users.

There is little doubt that computer software programs such as **AutoCAD** have increased the work capacity of designers, drafters, and engineers. Simple keyboard commands and mouse strokes are used to perform procedures that once took many hours to perform by hand. But why stop there? If several keyboard commands were compiled into one single command, even greater efficiency can be realized. This chapter will provide the reader with quick and simple techniques to realize such efficiency.

CREATING COMMAND ALIASES

AutoCAD provides a number of methods to input user commands. Screen menus, pull-down menus and toolbars are just three of those methods. The most traditional method is through the keyboard. By typing a command name the user is able to initiate that command. A command alias is a short, quick keyboard input that is created to replace the traditional and more widely recognized command name. **AutoCAD** has several of these already in place. A couple of pre-existing aliases that you may be familiar with are **L** for **LINE** and **C** for **CIRCLE. AutoCAD** provides an easy method to shorten the keyboard input required to perform any command.

Command aliases are created and saved in a predetermined section within the *ACAD.pgp* file. The following procedures provide a detailed explanation on how command aliases can be added to this list.

NOTE: Significant differences may occur in different versions of **AutoCAD.** Consult your *AutoCAD User's Guide* for modifications to your particular version of the software.

Before adding to the existing command aliases list be aware of the following guidelines:

- Some companies and institutions may already have specific aliases in use. Notify your supervisor or instructor of any changes made to the *ACAD.pgp* file.
- Aliases use memory. Be prudent with the number of command names invoked, especially on low memory capacity systems.
- Changes made to the *ACAD.pgp* file will be automatically loaded into each new drawing that is started or existing drawing that is opened.
- Aliases are not restricted to one or two letter names. But more than two or three letters defeats the purpose of creating an alias.
- Aliases cannot perform more than one command statement.

Step 1. Begin the *ACAD.pgp* file modification by locating the subdirectory or folder in which it is stored. In the more recent versions of **AutoCAD** it is found in the SUPPORT sub-directory. For example, in **AutoCAD 2000i** the *ACAD.pgp* file is found in the \ACAD2000i\SUPPORT sub-directory.

NOTE: **ACAD2000i** is used as an example. If you are using a different release of **AutoCAD**, replace "2000i" with your current version.

Use Windows Explorer to list all the *.pgp* files in the \Acad2000i\Support subdirectory.

Step 2. Use a text editor such as Microsoft Notepad to load the *ACAD.pgp* file.

Step 3. Use the scroll bar to move to the beginning of the *Command alias format:* section of the *ACAD.pgp* file.

Step 4. Position the new alias in its correct alphabetical position. Place a line space below the existing alias to allow the addition of the new alias.

NOTE: Aliases are not required to be in alphabetical order to work properly; however, alphabetizing allows for quick and easy verification of duplicate names. Do not use duplicate names.

Step 5. Key in the new command alias followed by a comma. Tab one time then type in the command name preceded by an asterisk (*). See the examples that follow.

Type:

E, ***ERASE**

EX, ***EXTEND**

EXX, ***EXPLODE** ('EXP' is an alternative, but typing a second **X** takes less time for inexperienced typists than searching for the **P** on the keyboard.)

F, ***FILLET**

WARNING: In **AutoCAD2000i** many commonly used commands have aliases already created. Do not replace an existing command's alias with a new one unless you are the only operator using your computer. Other operators will be familiar with the default aliases and your modifications will be confusing to them.

Step 6. *SAVE* the modified file as the same name.

Step 7. *EXIT* the text editor.

Step 8. Load **AutoCAD**. Open any drawing file and try your new alias key commands.

The list of aliases that follow are common **AutoCAD** commands. Some may already exist on your version of **AutoCAD**. Feel free to add to this list or change the alias command as your situation dictates.

CO = COPY
DI = DIST
DT = DTEXT
ED = DDEDIT
LI = LIST
MDD = DDMODIFY
O = OFFSET
RG = REGEN
RO = ROTATE
STR = STRETCH
TR = TRIM

Creating command aliases helps reduce the time required to input commands at the keyboard. But aliases are limited in the scope of the functions they can perform. Further customizations such as those described below can make the experienced **AutoCAD** user even more efficient and productive.

USING AUTOLISP

AutoLISP is a form of the *LISP* programming language used by programmers to develop unique user commands to be used within **AutoCAD**. These commands, or routines, can range from the simple to quite complex. They are intended to combine existing **AutoCAD** functions to form one "super command." **AutoLISP** is used to create commands needed by everyday users who have specific tasks to perform that **AutoCAD** doesn't perform in its "out of the box" state. Their tasks can be greatly simplified by combining several **AutoCAD** functions into one, easy to use, routine. When these commands or routines are initialized and used within a drawing they will make an operator more efficient and productive. With **AutoCAD R14** came a new visual programming environment for **AutoLISP** users, **Visual LISP**. Former users of **AutoLISP** will quickly see the improved productivity and ease of use **Visual LISP** provides. Among its many enhancements, **Visual LISP** has a color-coded syntax source checker that quickly identifies typographical errors. There are also a comprehensive set of debugging tools that can search for extra or missing parentheses. Though *LISP* routines can be complex and difficult to implement, they can greatly increase your drawing productivity.

Of the two routines we will create, the first is relatively simple and will increase your drawing speed when using keyboard commands. It is divided into two sections. The first section is an alternative to the commands aliases previously discussed. The second section is a quick method of inserting flow diagram symbols into a drawing. The second *LISP* routine is much more complex. By incorporating expressions specific to **AutoLISP** you will create a routine that can be used to quickly draw a horizontal vessel and its two head enclosures.

One of the drawbacks to the alias commands is that they will not perform multiple command statements. **AutoLISP** overcomes this. A multiple command statement that you may be familiar with is the **CHANGE** command. **CHANGE**, when invoked from the keyboard, requires the operator to select an object, specify whether you wish to change *Properties* or *Change point*, then stipulate the type of change to be performed (i.e. *Color/Elev/Layer/Ltype/ltScale/Lweight/Thickness*) prior to the final

effect being realized. Aliases do not allow multiple parameters to be invoked during the command sequence. A word of caution here, **AutoLISP** routines override alias commands. If they both have a common name the **AutoLISP** routine will be invoked.

The following step-by-step procedure will explain how to create your first *LISP* routine.

Step 1. Use a text editor to begin a new file.

NOTE: To better organize files, all new *.lsp* files you create should be kept in the same subdirectory as those already existing within **AutoCAD**. On most versions of **AutoCAD** .lsp files are kept in the *\SUPPORT* subdirectory.

The *LISP* routine we will be develop uses *defun* statements. *Defun* is an acronym for **DEfine FUNction**. *Defun* statements are keyboard inputs that allow an operator to use short command names to describe longer **AutoCAD** command sequences. The letter name used to identify your defun statement is the command name that will be typed at the keyboard as a replacement for the longer **AutoCAD** command and parameter options. Typing in the one or two letter command name saves considerable time when compared to conventional command sequences.

Step 2. Type the following statements just as they appear. It is important that you have a good understanding of the **AutoCAD** command you're are wanting to initialize so that no parameter is overlooked. Any new commands you want to develop can be created in the same manner as the ones shown below. To help you understand the command being developed, a short explanation is provided in the brackets following each statement. Do not include the explanation in the routine you are developing. Remember, type the statement just as they are shown. Including all opening, closing, and double parentheses.

NOTE: New versions of **AutoCAD** have functions that make these commands seem obsolete. Users of older versions however may find these commands useful. They are intended as samples only.

(defun c:ZE ()
(command "ZOOM" "EXTENTS")) [*performs the ZOOM command with the EXTENTS option. Keep a single line space between each 'defun' statement*]
(defun c:ZP ()
(command "ZOOM" "PREVIOUS")) [*performs the ZOOM command with the PREVIOUS option*]
(defun c:LIT ()
(command "LINE" "INT")) [*draws a LINE seeking the 'From point:' as a point of INTersection. LIT was chosen as the defun name because LI is the command alias for the LIST command.*]
(defun c:LE ()
(command "LINE" "END")) [*draws a LINE seeking the 'From point:' as an ENDpoint*]
(defun c:LM ()
(command "LINE" "MID")) [*draws a LINE seeking the 'From point:' as a MIDpoint*]
(defun c:RED ()
(command "COLOR" "RED")) [*sets the new COLOR value to RED*]
(defun c:WHITE ()
(command "COLOR" "WHITE")) [*sets the new COLOR value to WHITE*]
(defun c:BLUE ()
(command "COLOR" "BLUE")) [*sets the new COLOR value to BLUE*]

Step 3. *SAVE* the file as *PIPELISP.lsp*.

Step 4. *EXIT* the text editor.

You will probably want to test your *LISP* routine at this time. Unlike the *ACAD.pgp* file, *LISP* routines must be loaded each time they are to be used in a drawing. Once loaded into a drawing, *LISP* routines become part of that drawing during the time it is the current drawing file. If you end the drawing and open it at a later time the *LISP* routine must be reloaded. *LISP* routines can be loaded at the keyboard using the following command.

Step 5. Return to **AutoCAD.** At the command prompt, type the following:

Command:**(load "PIPELISP")**

Press *ENTER*.

The second part of your *LISP* routine will incorporate the flow diagram symbols created in Chapter 7. As an alternative to the *AutoCAD Design Center* this routine will expedite the insertion of symbols that have been previously inserted into a drawing as blocks. Add the following *defun* statements to the end of your **PIPELISP** routine.

Step 1. Open the *PIPELISP.lsp* file using the text editor.

Step 2. Use the scroll bar to move to the end of the file.

Step 3. Add the following defun statements to the end of your **PIPELISP** routine.

(defun c:PUMP ()
(command "INSERT" "PUMP")) [Keep a single line space between each '*defun*' statement.]
(defun c:EXH ()
(command "INSERT" "EXH"))
(defun c:HOR ()

```
    (command "INSERT" "HOR"))
(defun c:VERT ()
    (command "INSERT" "VER"))
(defun c:GATE ()
    (command "INSERT" "GV"))
(defun c:GLOBE ()
    (command "INSERT" "GBV"))
(defun c:CONTROL ()
    (command "INSERT" "CV"))
(defun c:CHECK ()
    (command "INSERT" "CKV"))
(defun c:PSV ()
    (command "INSERT" "PSV"))
(defun c:ORIFICE ()
    (command "INSERT" "OF"))
(defun c:REDUCER ()
    (command "INSERT" "RED"))
(defun c:BUBBLE ()
    (command "INSERT" "IB"))
(defun c:NOZZLE ()
    (command "INSERT" "NOZ"))
(defun c:FLOWARO()
    (command "INSERT" "FA"))
(defun c:CONTBOX ()
    (command "INSERT" "CB"))
(princ "Your LISP routine has been loaded!")
```

Step 4. *SAVE* the modified file as the same name.

Step 5. *EXIT* the text editor.

Any symbol that was created in Chapter 7 can be added to your *LISP* routine Before your *LISP* will properly insert the appropriate symbol a few more steps must be completed.

Step 1. Make certain all flow diagram symbols have been created on the drawing *FLOSYMBL* and blocked using the specified names.

Step 2. Begin or open the drawing into which the flow diagram symbols are to be inserted.

Step 3. Use the **INSERT** command to insert drawing *FLOSYMBL* into the current drawing.

Step 4. ERASE drawing *FLOSYMBL* out of the current drawing. (Inserting and erasing *FLOSYMBL* will cause the blocks of that drawing to become nested within the current drawing.)

Step 5. Load your *LISP* routine if it is not already loaded.

Command: **(load "PIPELISP")**

Press *ENTER*

Step 6. Type in the desired symbol name at the command prompt. Pick the insertion point as needed, establish the appropriate X/Y scale factors, and rotation angle.

Obviously any name can be given to the defun statements to describe the command you want to perform. Printing a copy of your routine, once it is complete, may be necessary to prevent the duplication of names on new statements you may add later. This printed copy we also help you remember the new command names you will be using when inserting the symbols or performing commands.

As mentioned previously the second LISP routine is much more complex than the first. More than just defun statements, it is written using programming expressions specific to **AutoLISP** that will automatically create a horizontal vessel and its two head enclosures, including weld lines. The routine is written in such a manner that the end user is allowed to select points within an **AutoCAD** drawing that will specify the vessel's location, length, diameter, and orientation. Once the user has specified the required values the routine will calculate and draw the vessel.

Follow the steps as indicated below to create the vessel using **AutoLISP** language.

Step 1. Use a text editor to begin a new file.

Step 2. Type the following statements just as they appear. Include all opening, closing, and double parentheses.

```
(defun c: Vessel ()
    (setq s (getpoint "Select starting point on vessel centerline:\n"))
    (setq a (getangle s "Select second point to establish vessel orientation:\n"))
    (setq l (getdist "Select two points to establish vessel length.
(Tangent to tangent distance). \nSpecify first point."))
    (setq d (getdist "\n Select two points to establish vessel diameter.
    \nSpecify first point."))(setq b (+ a pi))
    (setq b (+ a pi))
    (setq c (/ d 2))
    (setq e (polar s a l))
    (setq f (/ pi 2))
    (setq g (* c 0.7320508))
    (setq h (polar e (+ a f) c))
    (setq h1 (polar s (– a f) c))
    (setq j (polar e (+ a f) g))
    (setq j1 (polar s (– a f) g))
        (Command \n "PLINE" h "W" "0" "" "A" "CE" j
        "A" "–60" "CE"
    (setq k (polar e b (* c 1.2679492))) "A" "–60"
    (setq k (polar e (– a f) c)) "L"
```

```
(setq k (polar k b l)) "A" "CE" j1 "A" "–60" "CE"
(setq k (polar s a (* c 1.2679492))) "A" "–60"
(setq k (polar s (+ a f) c)) "L"
(setq k (polar k a l)) "")
(setq m (polar e (- a f) c))
(setq p (polar s (+ a f) c))
   (Command "LINE" h m "" \n"LINE" h1 p "")
   (Command \n "REGEN"))
```

Step 3. SAVE the file as *vessel.lsp* in the \SUPPORT subdirectory.

Step 4. EXIT the text editor.

Step 5. Open or begin an **AutoCAD** drawing.

Step 6. Load the *LISP* routine as follows. At the **AutoCAD** command prompt type the following:

Command: **(load"vessel")**

Press *ENTER*.

Step 7. AutoCAD will return to the *Command* prompt. At the *Command* prompt type:

Command: **vessel**

Press *ENTER*

Step 8. Respond to the specified command prompts by selecting the desired points. The horizontal vessel will be created accordingly.

AutoLISP has been enhanced with **Visual LISP** (*VLISP*) to increase productivity. **Visual LISP** implements an integrated development environment (IDE) that incorporates several development tools to make the **AutoLISP** programmer's job easier. Among the tools are color-coded syntax checker, a compiler and debugger. **VLISP** represents the next generation of LISP for **AutoCAD.** When the **VLISP** command is invoked the **Visual LISP** console is displayed. Use the **OPEN** command to display an existing **AutoLISP** routine. At this time the loaded file can be evaluated for accuracy and precision. Several debugging features can detect and pinpoint any errors in the routine. Refer to your **AutoCAD** documentation for additional information.

CHAPTER 14 REVIEW QUIZ

1. Define alias.

_____

_____

2. In what file are command aliases stored? In which subdirectory is the file stored?

_____

_____

3. What is **AutoLISP**?

_____

_____

4. What is the purpose of a *defun* statement?

_____

_____

5. In which subdirectory are *.lsp* files stored?

_____

_____

Three–Dimensional Modeling of Piping Systems

One advancement in piping software that has produced a wealth of design and construction possibilities is 3D computer modeling. Though not new, this technology is now available to most PC-based **CAD** users. Previously, 3D computer modeling could be performed only on expensive mainframe or super-mini computers having large amounts of available memory. Continuous improvements in PC hardware and the availability of **CAD** software have made 3DE modeling the preferred method of producing piping drawings. Some of the available 3D pipe modeling software packages are **Rebis/AutoPLANT**, **CADWORKS**, **PASCE**, **Caesar**, **PDS**, and **PDMS**. A common question being asked at many companies is whether the benefits of 3D computer modeling of piping systems actually outweigh the additional effort required to produce them. The consensus of the engineering community seems to be "yes" because an increasing number of engineering firms are pursuing this method of work and a growing lists of clients are demanding it.

ADVANTAGES OF 3D MODELING

One of the advantages of a 3D model over conventional drawings is an improved ability to show clearly what occurs during the design phase of a piping facility. Chemical plants, refineries and other types of piping facilities are very complex. Frequently vast numbers, sizes and types of pipe, equipment, and other components must be assembled to complete a project. Even seasoned piping designers find it difficult to clearly understand the scope of the project from orthographic views alone. By using a 3D model, designers can view the facility from any direction and quickly visualize and understand the geometry of its construction. Refer to the model of the skid package shown in Figures 15-1 through 15-3.

Furthermore, to increase clarity, computer software makes it possible to zoom in close to a selected area of the model that may be crowded and confusing. If necessary, the pipe, equipment or structure that lies between the viewer and area of concern can be "clipped" or removed by the modeling software. This makes it possible to see inside the 3D model and study its hidden features.

Once a 3D model has been developed a virtual tour or "walkthrough" can be created. Walkthroughs hasten client approval and are used as training videos by plant personnel responsible for safely maintaining and operating the facility. The improved visualization capabilities alone make modeling a piping facility a worthwhile endeavor. The ability to forecast potential design or construction problems during the modeling phase can result in tremendous time and cost savings as opposed to discovering and solving the problem later at the job site.

CHECKING FOR INTERFERENCES

Another valuable benefit of 3D computer modeling is the ability to perform interference detection. Building models of complex projects is not something new to piping designers. For years plastic models have been built that can takes hundreds of hours to construct and may cost thousands of dollars to produce. One of the main reasons these models are built is to verify the fit of all the components in the facility. During the design phase it is

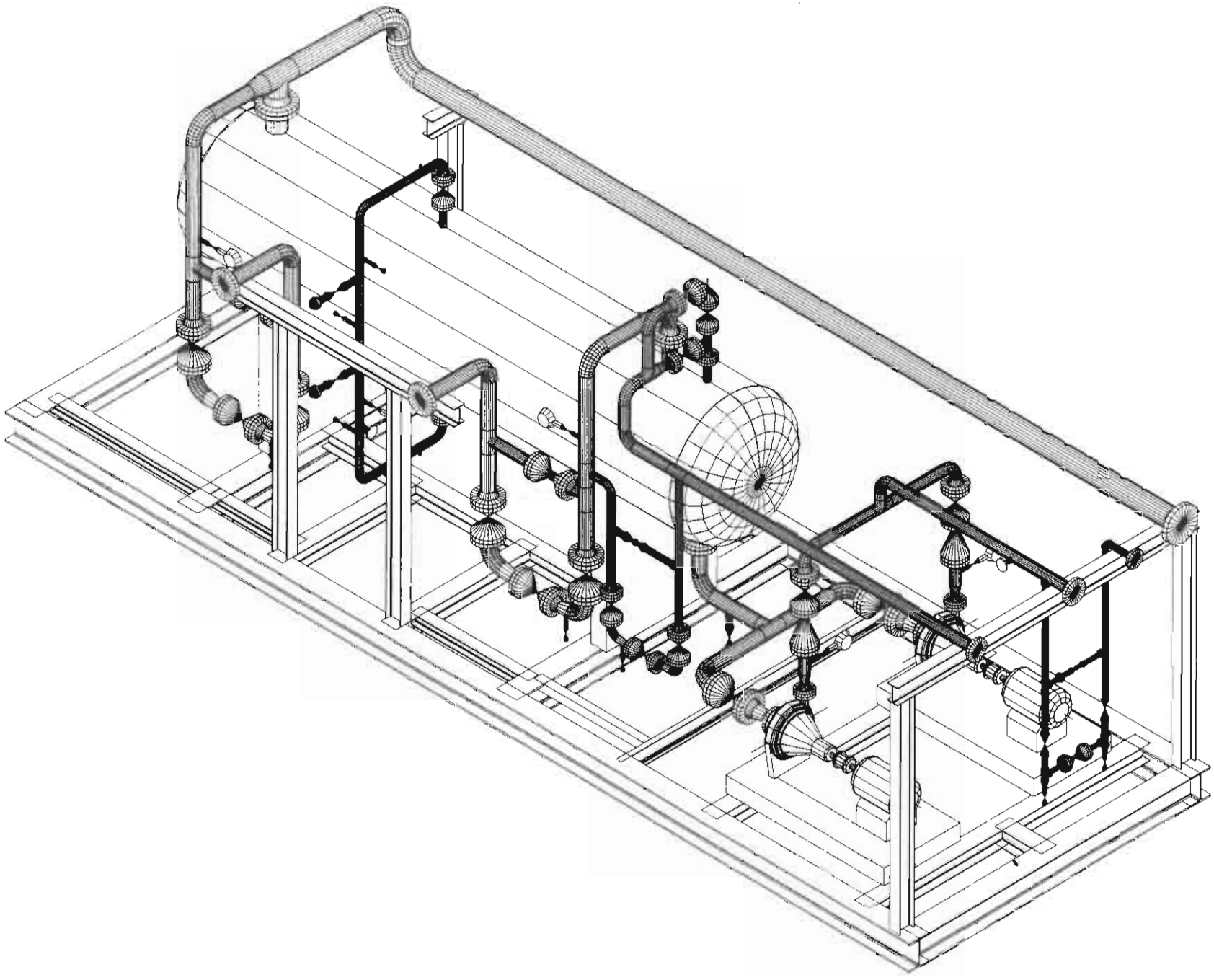

Figure 15-1. Model of a piping assembly mounted on a skid. (Model courtesy of Gene Eckert, ECAD, Inc.)

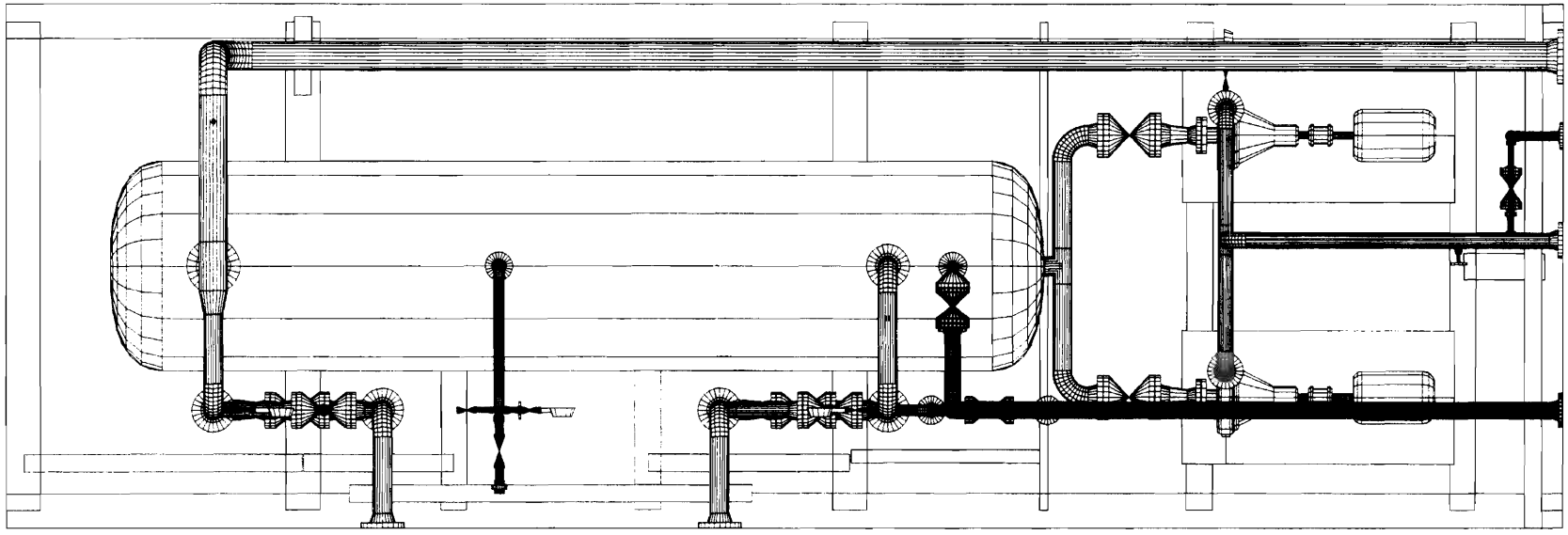

Figure 15-2. Skid model, Plan view.

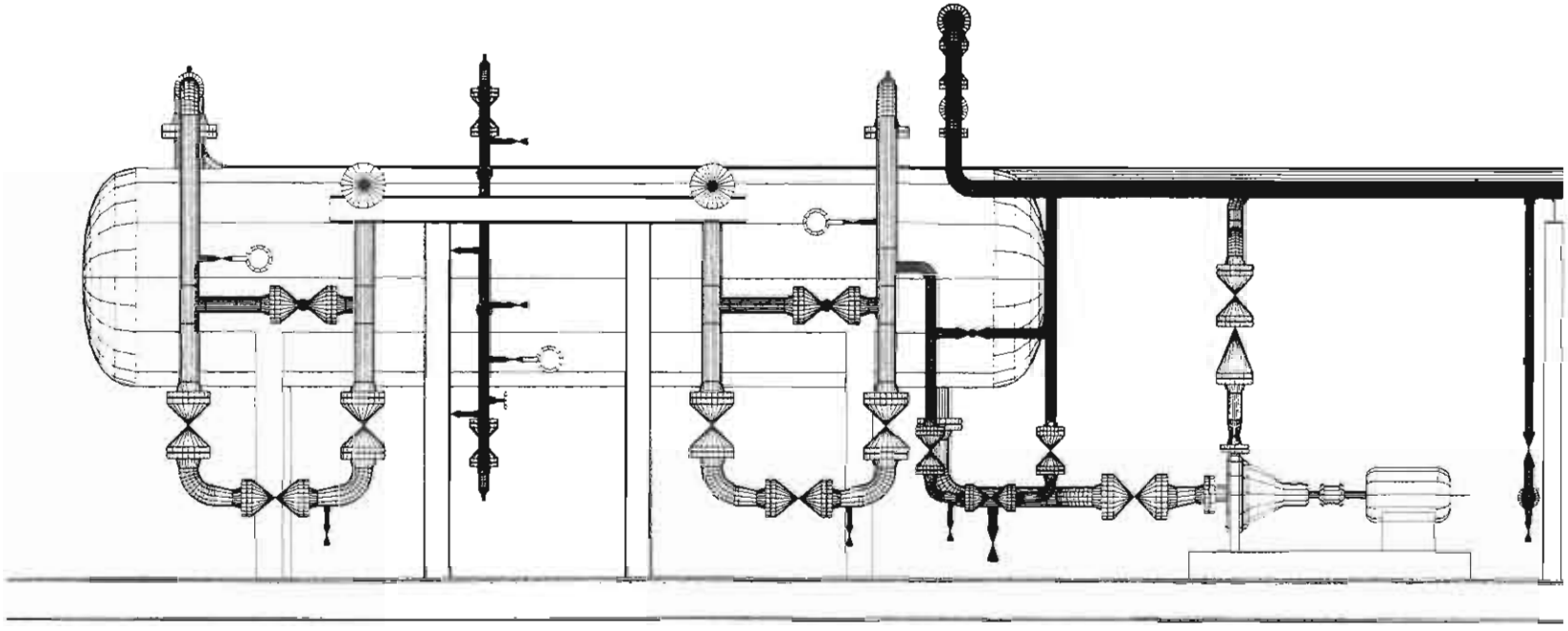

Figure 15-3. Skid model, Elevation view.

easy to overlook minor details in something so complex as a piping facility. Only by building a physical model can the designers verify that there are no interferences between components (i.e., a pipe passing through a steel support, a beam hitting a piece of equipment, etc.). If a design team can detect problems such as these before construction begins, savings in building costs can be enormous. Each problem area redesigned in the field adds substantially to the cost of completing the project.

Piping software that can run clash checking on a 3D model makes interference detection possible. Interference detection software works by checking the surface of each component in an assembly against other components. Usually a system is separated into categories such as piping, structure, and equipment. This is easy to do because a 3D model is typically developed making use of the software's layering capability. Piping software will automatically place piping components (fittings, flanges, valves), steel supports, and mechanical equipment on their respective layers. It can even segregate piping components according to pound rating (150, 300, etc.), specification, or material and place them on individual layers. Interference checking is performed by checking one layer against another to confirm that no two items are occupying the exact same space within the facility. Figure 15-4 shows an interference between a pipe and a structural support. As the interference detection program is initiated, certain software programs will locate the first clash and change the color of the two elements that are interfering to a different color. The software will relocate the area of the model in question to the center of the display and allow the user to zoom in for a closer look. When multiple interferences are detected, with the press of a key the software will proceed to the next problem area, allowing the user to view each area in question in this manner. Some of the more sophisticated software packages allow the user to "fly" around the problem area in real time, viewing it from any direction or angle. The ability of computer software to help prevent costly construction errors is another reason why 3D modeling is so valuable.

GENERATING DRAWINGS AUTOMATICALLY FROM A MODEL

Once a 3D model has been built, the geometry of the piping assembly is clear and unambiguous. The designer can then use piping software to instruct **AutoCAD** to automatically generate drawings that view the model from any direction. The designer can then add notes and dimensions to the drawings, send them to checkers and finally release them for construction.

A designer can instruct the software to generate plans, sections, or elevations in several different drawing formats including single-line, double-line and 3D views with all hidden lines removed.

Solid modeling is different from wire frame modeling because a solid model can display objects with the hidden surfaces removed. On a wire frame, all surfaces are visible. Using this solid modeling capability 3D software can automatically create projected views of solids with all the hidden lines removed (see Figure 15-5 through 15-7). This capability gives the user a powerful tool for displaying piping drawings.

GENERATING ISOMETRIC DRAWINGS AUTOMATICALLY

3D modeling software can generate isometric drawings of pipe configurations automatically. The isometrics are created from the 3D model and with a few manual touch-ups and additions, are ready for construction issue. Some software packages even have the ability to create isometrics complete with dimensions (see Figure 15-8).

Again, by investing some time and effort in modeling the facility from the start, the designer can reap large returns at the end of the project.

COMPUTER-AIDED ENGINEERING OF MODELS

Another computer task that can be accomplished using 3D models is that of stress analysis calculations on pipe and equipment. The piping system and its supports can be analyzed both statically and dynamically. Features include checking for seismic movements, flow induced vibrations, wind loading and wave loads. By building a 3D model, a designer can use its geometry for other engineering design analysis programs.

CHOOSING A MODELING SOFTWARE PACKAGE

As with any product in the marketplace, each manufacture wants to make their product as attractive and appeling to potential customers as possible. Software is no different. Software developers use the most advanced programming languages available to implement all the latest

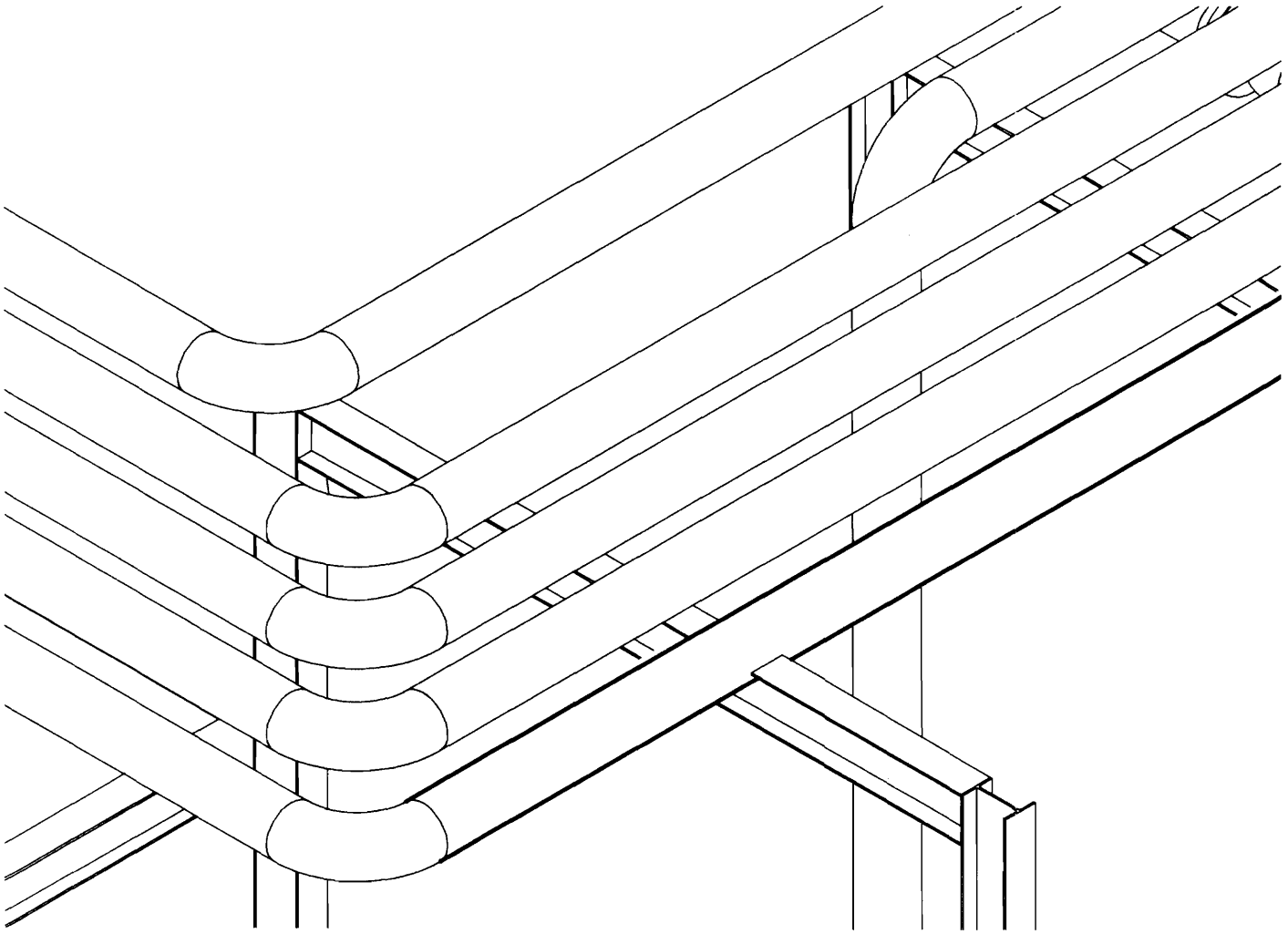

Figure 15-4. Interference detection between a pipe and structural support.

"bells and whistles" into their 3D modeling package to make it attractive. Different developers write software for different CAD platforms. Some write for more than one. Selecting the right software involves more than choosing the one with the best looking sales brochure. To provide a benchmark for determining what features a quality 3D piping software package should include we will explore some of the base features of the **Rebis/AutoPLANT** software.

RebisAutoPLANT

Rebis/AutoPLANT uses AutoCAD as its support platform. Users of **AutoCAD** will find it easy to use. When loaded, **AutoPLANT** adds a new item to the pull-down menu list, Rebis. Within the Rebis menu are components specific to each design application. Design applications can include Piping, Equipment, Multi-Steel, and Isometrics. Rebis also provides several toolbars specific to each design application (see Figure 15-9).

BUILDING A 3D MODEL USING AUTOPLANT

When a new drawing is initialized the dialog box shown in Figure 15-10 is displayed. Detailed information specific to the creation of the 3D model is input into the appropriate fields. Information such as Configuration Units and the location of the modeled area are determined by providing X, Y, and Z coordinates. Also requested are the length and width of the proposed model.

The next step is to establish the location of the mechanical equipment that will be arranged in the modeled area. Using dimensions provided on vendor data drawings, measurement parameters are specified for the

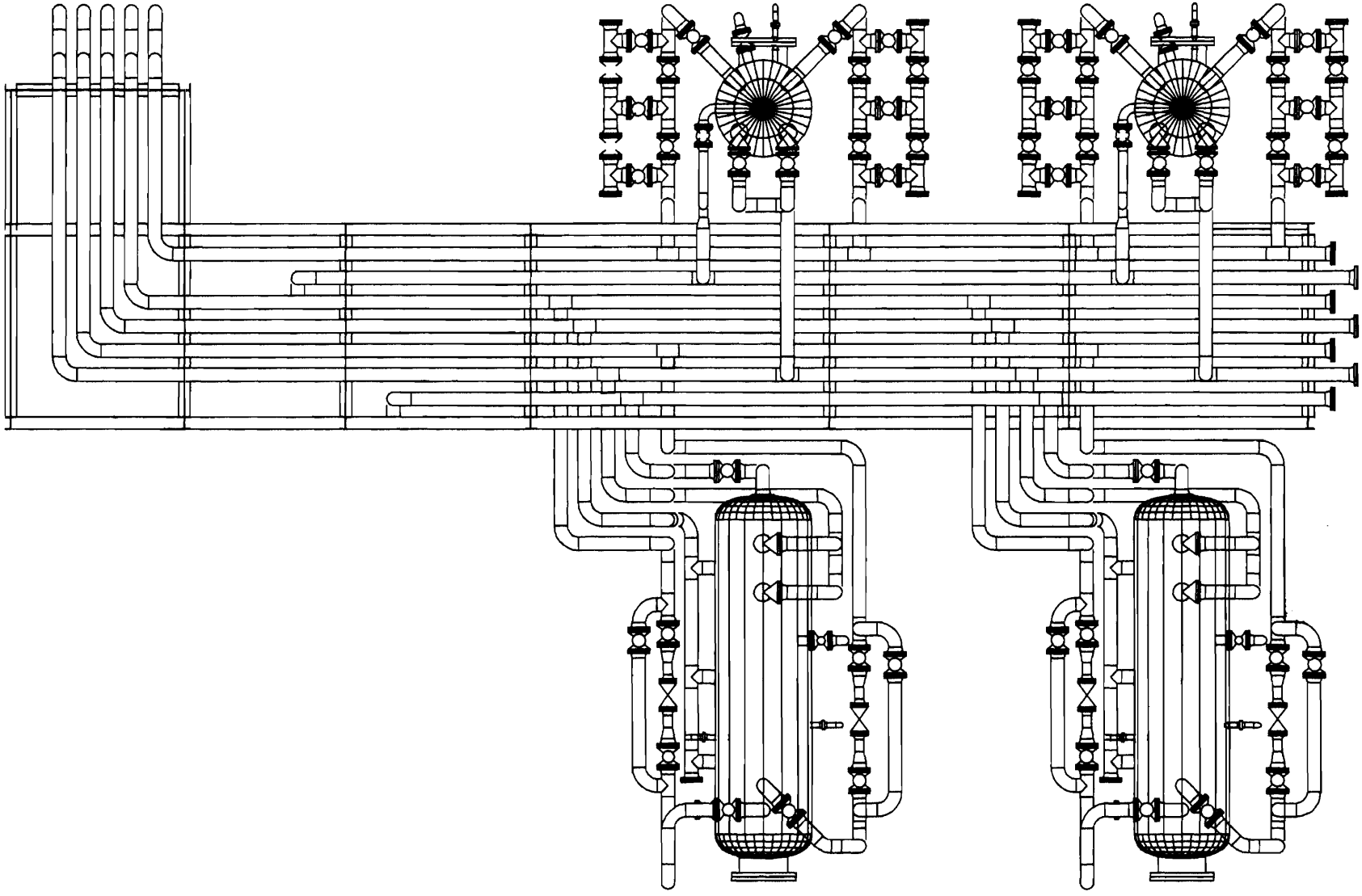

Figure 15-5. Plan view of a 3D model. (Courtesy of Rebis, Inc.)

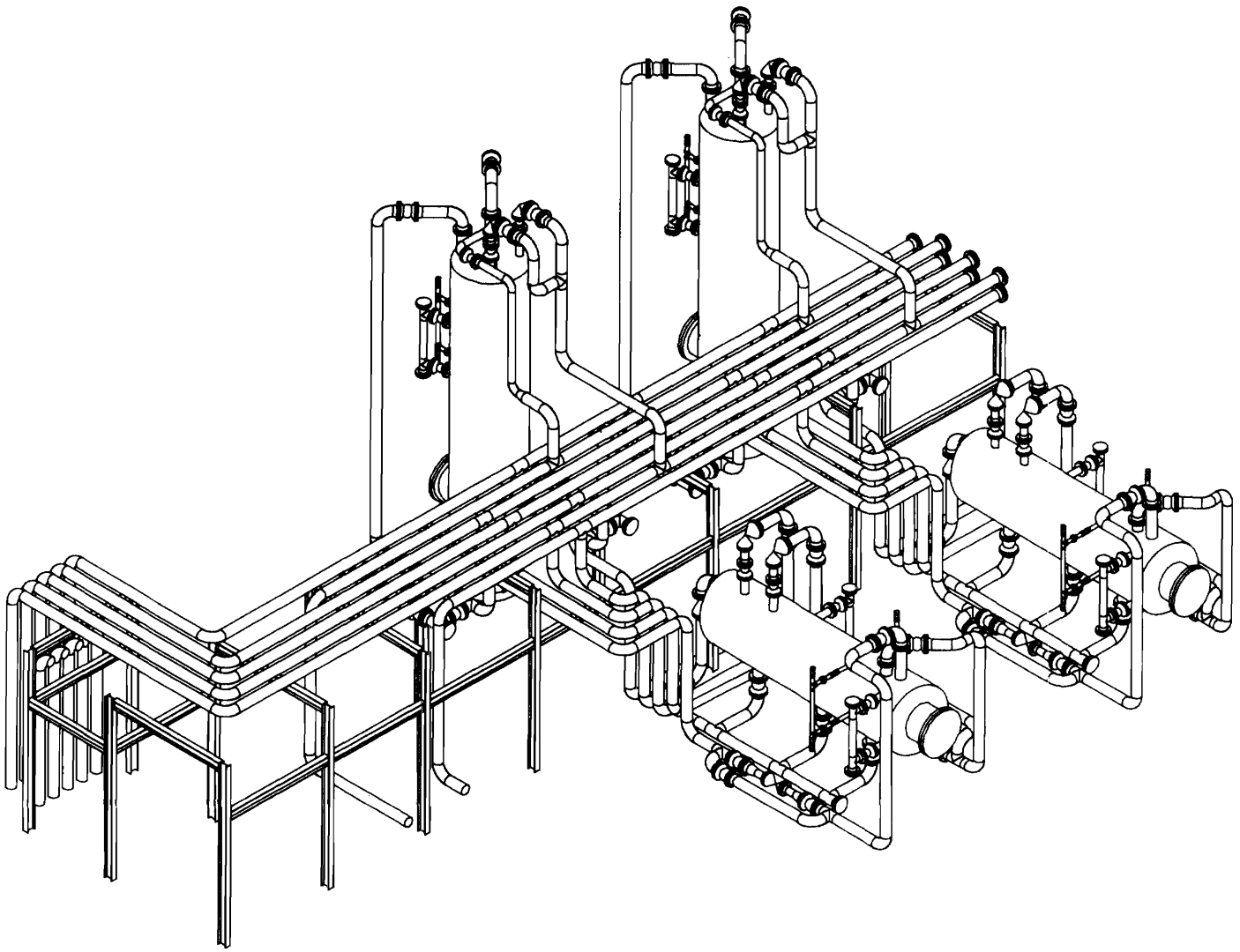

Figure 15-6. 3D model, perspective view. (Courtesy of Rebis, Inc.)

various pieces of mechanical equipment used in the design. The dialog boxes that follow are specific to centrifugal pumps, horizontal heat exchangers, and horizontal and vertical vessels (see Figures 15-11 through 15-14).

Once the values for each parameter in the dialog box have been supplied, the user is then prompted to specify the equipment's location point, elevation, and orientation angle. Each piece of equipment can be systematically placed within the model, one-by-one, in a similar manner.

After a piece of equipment is located, additional components such as nozzles, ladders, and platforms are added. The dialog boxes shown in Figures 15-15 and 15-16 are used to place suction and discharge on pumps. Figure 15-17 is a representation of the dialog box used to position and orient radial nozzles on horizontal and vertical vessels.

Ladders and platforms are added using the dialog boxes shown in Figures 15-18 through 15-20. Information supplied on vendor drawings can be used to establish length, width, orientation, and position of all ladders and platforms required on the vessels.

After all the required mechanical equipment components have been located, the pipe components are added through a Drawing Preferences dialog box (see Figure 15-21). Within this dialog box all pertinent information specific to a particular pipe configuration is designated. Information critical to the accurate modeling of the pipe is provided. Information such as specification, nominal pipe size, line number, and insulation thickness. Depending on client and/or company design standards, additional information is also specified. This information is used to establish the drawing's appearance. Such

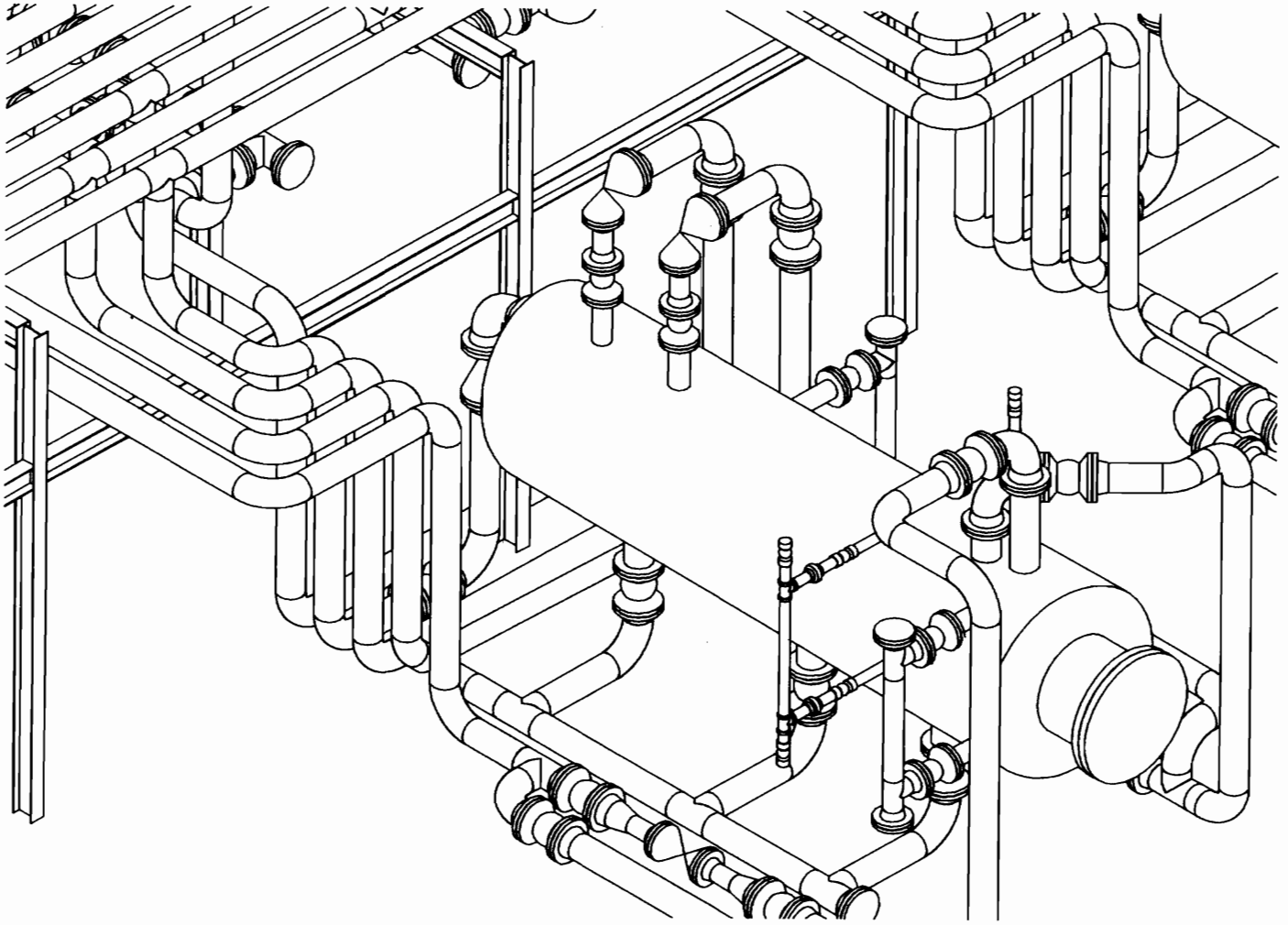

Figure 15-7. Close-up detail of a 3D model. (Courtesy of Rebis, Inc.)

information includes pipe color, layer assignment, drawing mode (i.e., single-line, double-line, or 3D) and surface resolution.

Subsequent to establishing specifications and line size, fittings, flanges, and valves are then added to equipment nozzles. **AutoPLANT's** compatibility checking feature prevents accidental misalignment of dissimilar specification components. Development of each pipe configuration involves little more than selecting the desired component then determining its connection point and orientation. Use of the Auto Routing feature allows for quick and accurate component placement. The toolbars shown in Figure 15-22 are just a few of the many available for inserting piping components.

Other features within **AutoPLANT** include automatic isometrics, bills of material and, with an add-on package, animated walkthroughs. Developers of other 3D modeling software packages have included features similar to those found in **AutoPLANT**. Though some differences may be apparent, most 3D pipe modeling software packages have many features typical of those found in **AutoPLANT**. Choosing the right 3D modeling software package then becomes a matter of client, company or user preference. Figure 15-23 represents a 3D wire frame model of Unit 01, which was developed in Chapter 10.

MARK	QTY	SIZE	SCH	DESCRIPTION	TAG
				SHOP MATERIAL	
1	2	4"	STD	150LB RAISED FACE WELDNECK FLANGE	
2	1	6"	STD	150LB RAISED FACE WELDNECK FLANGE	
3	1	6"	STD	90 DEG. L.R. BW ELBOW	
4	1	6"X4"	STD	CONC. REDUCER BW	
5	1	6"X4"	STD	BW RED. TEE	
A	1	4"	STD	PIPE SMLS ASTM-A106 GRADE B	4'-8 1/2"
B	1	4"	STD	PIPE SMLS ASTM-A106 GRADE B	5'-3 7/8"
C	1	6"	STD	PIPE SMLS ASTM-A106 GRADE B	1'-9 3/8"
D	1	6"	STD	PIPE SMLS ASTM-A106 GRADE B	3'-2 7/8"

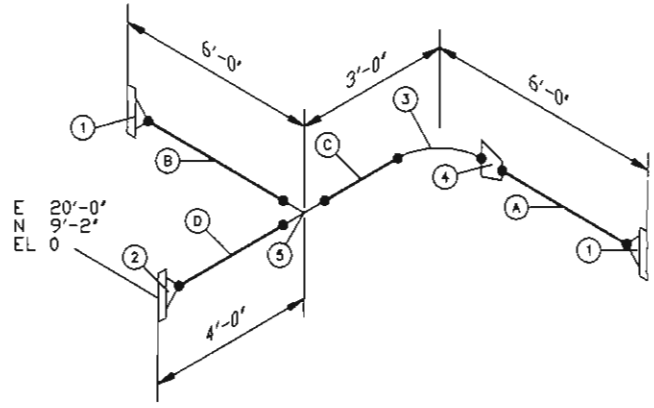

Figure 15-8. Isometric drawing created with AutoISO, from Rebis. (Courtesy Rebis, Inc.)

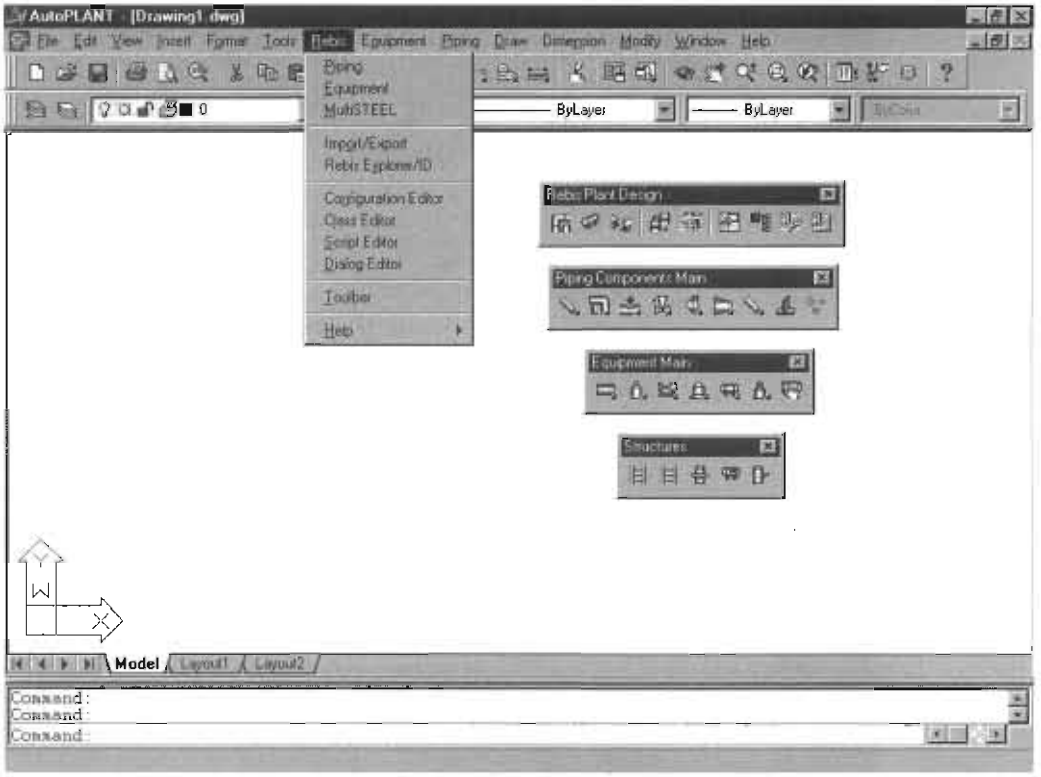

Figure 15-9. Rebis menu pull-down and application toolbars.

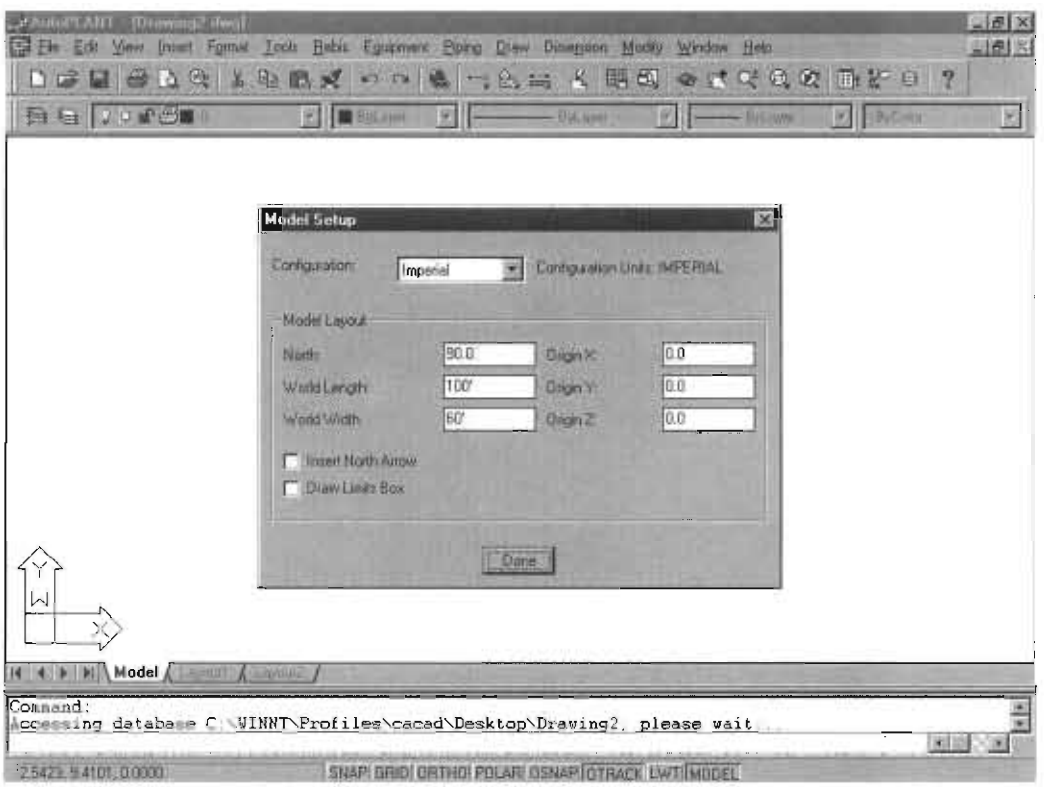

Figure 15-10. Model setup.

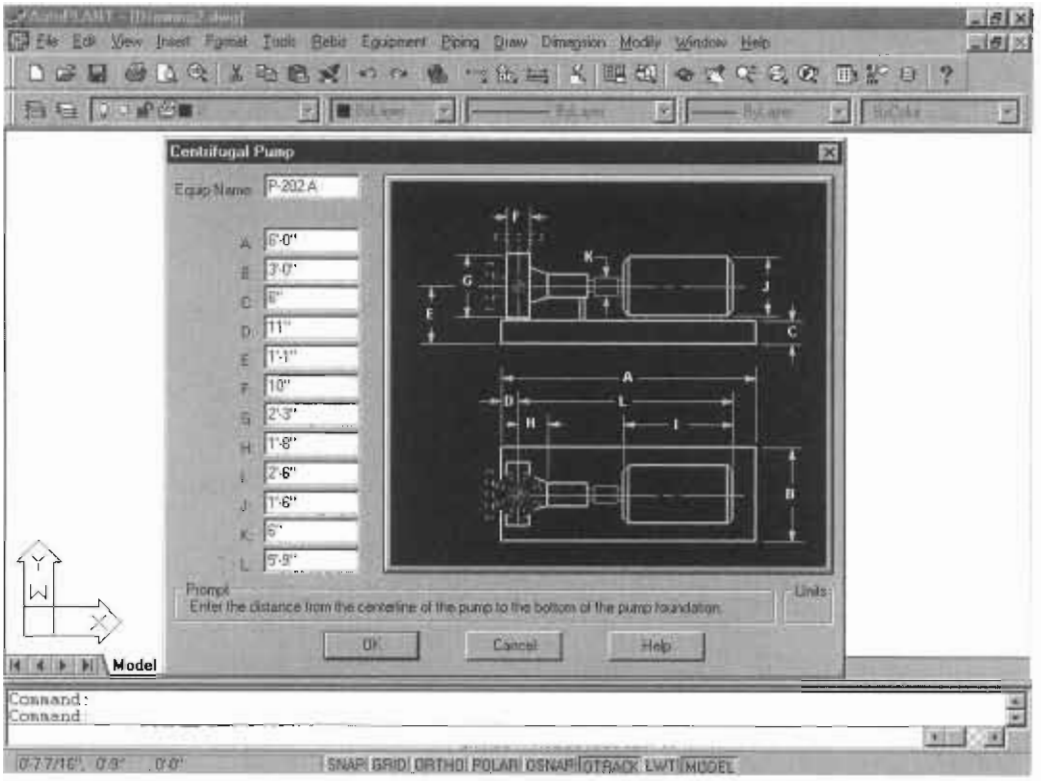

Figure 15-11. Centrifugal pump.

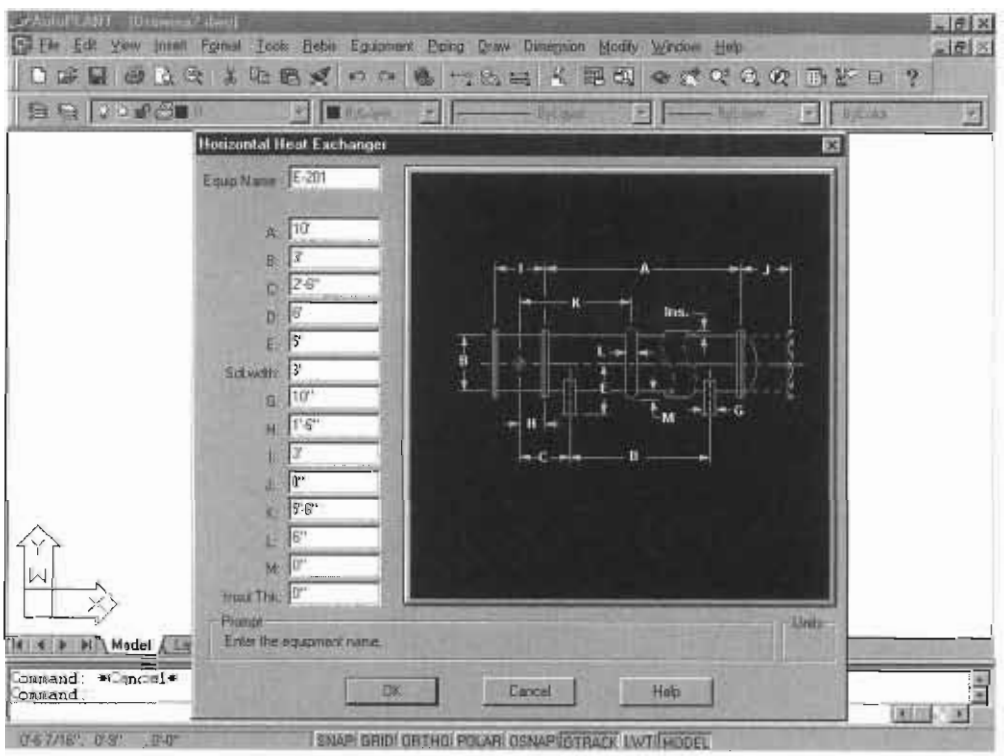

Figure 15-12. Horizontal heat exchanger.

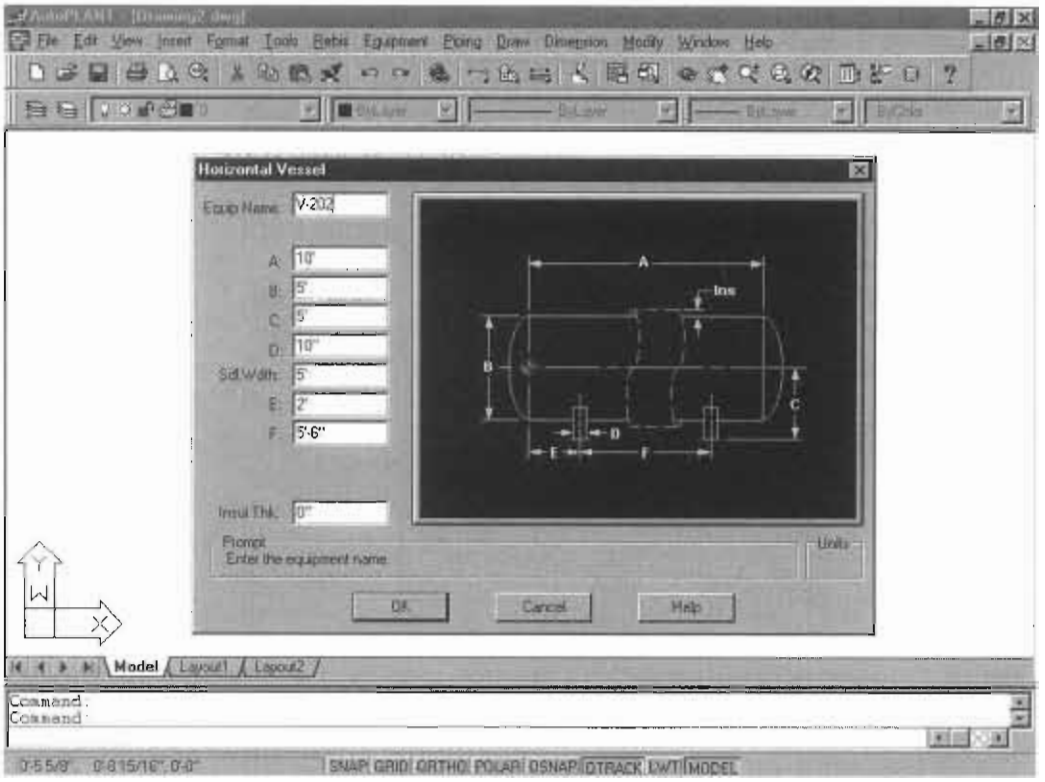

Figure 15-13. Horizontal vessel.

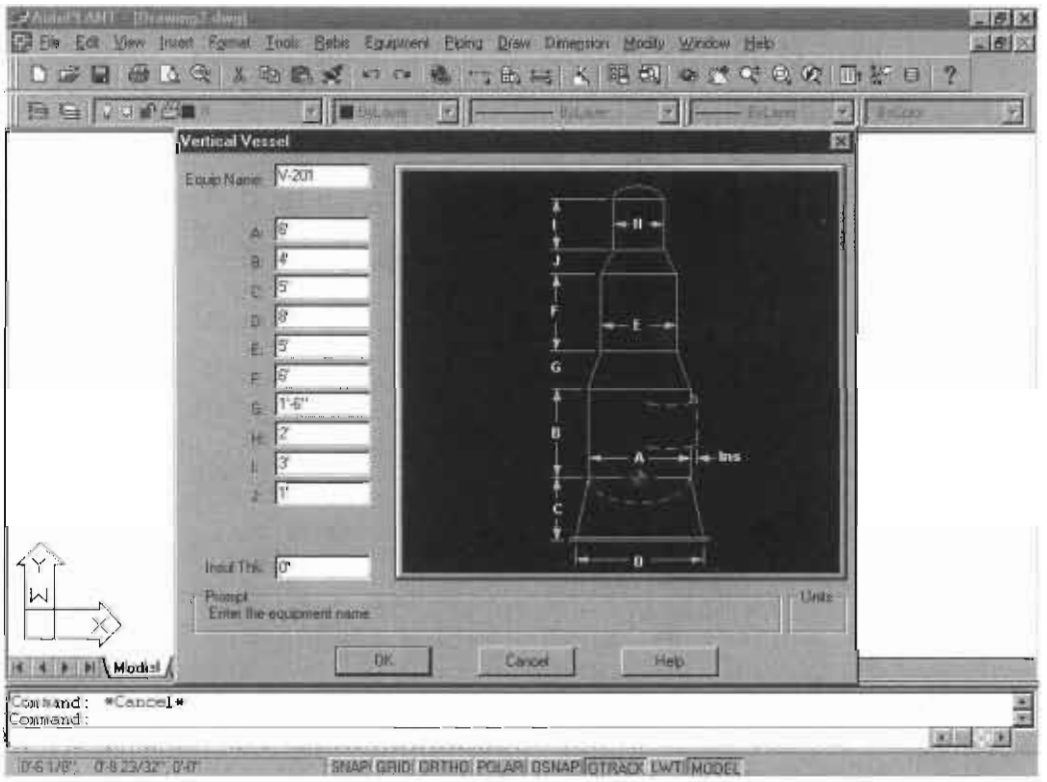

Figure 15-14. Vertical vessel.

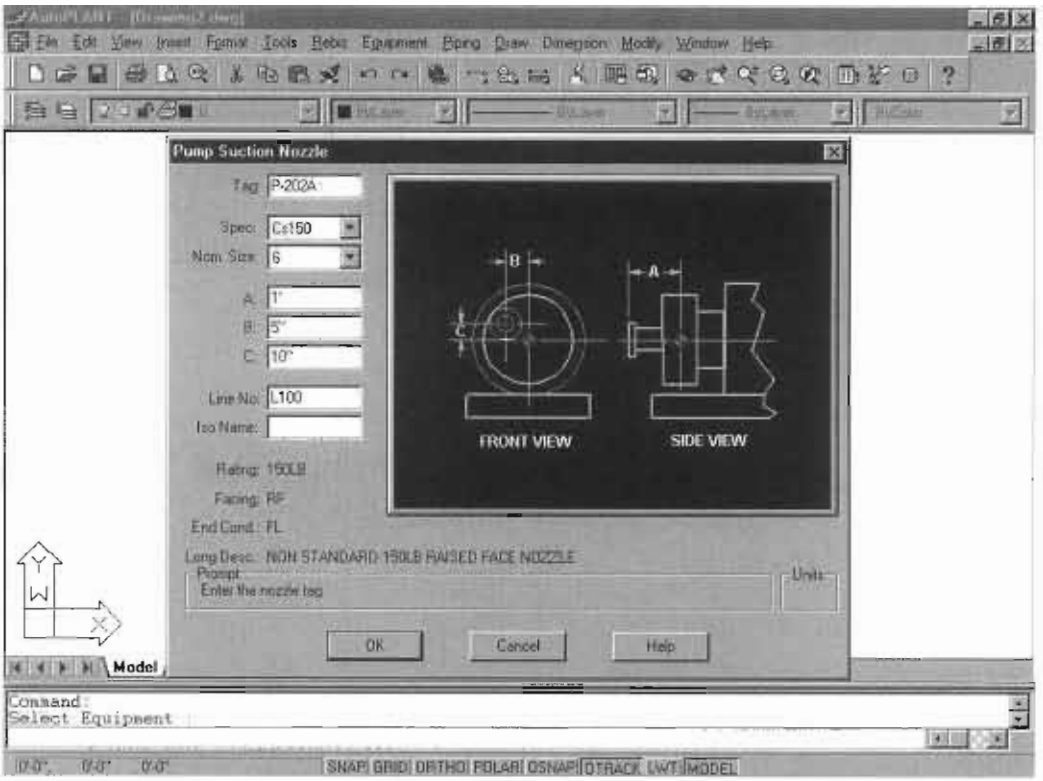

Figure 15-15. Pump suction nozzles.

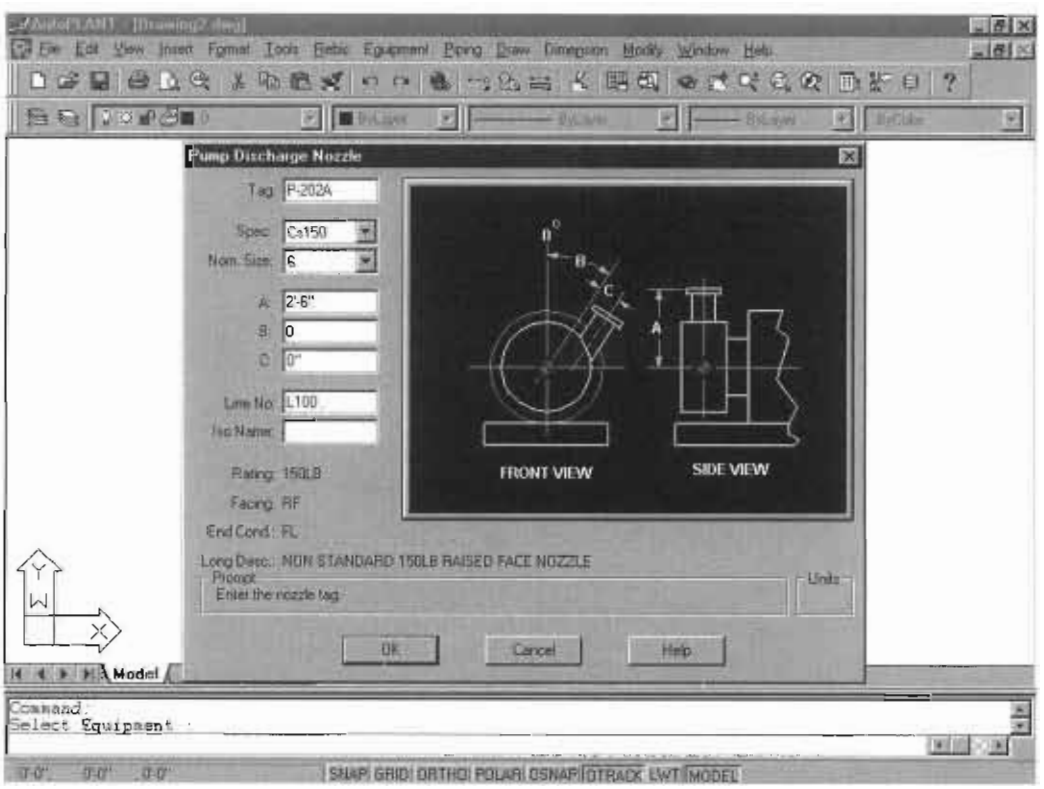

Figure 15-16. Pump discharge nozzles.

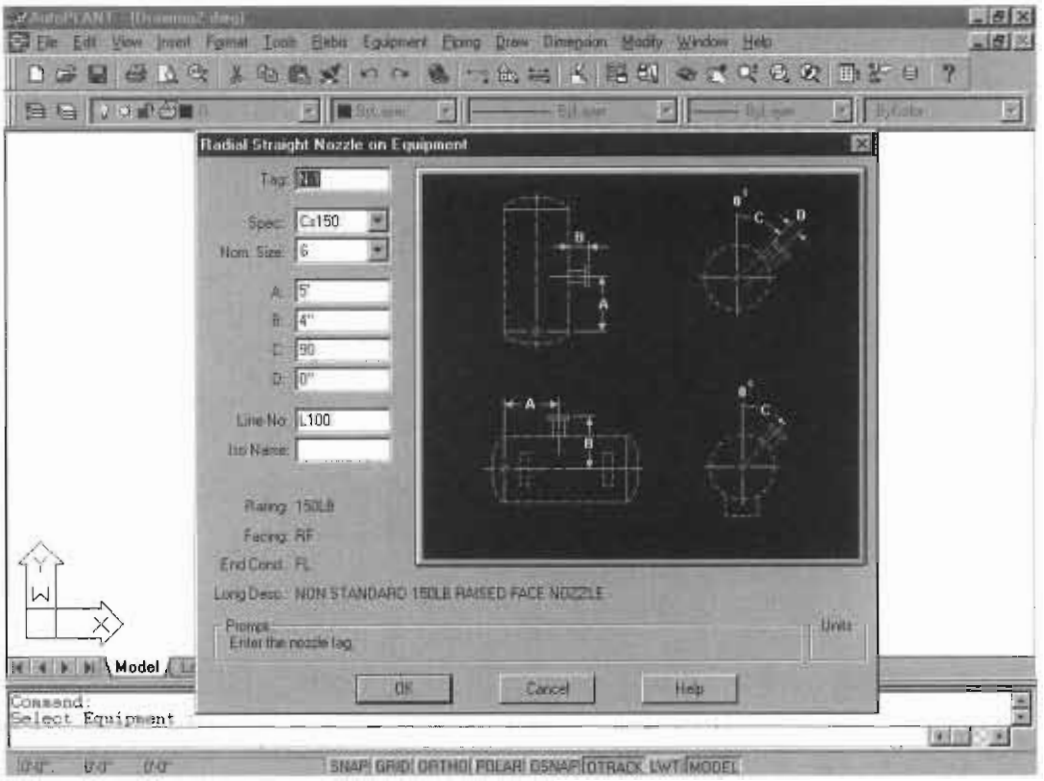

Figure 15-17. Radial straight nozzle on equipment.

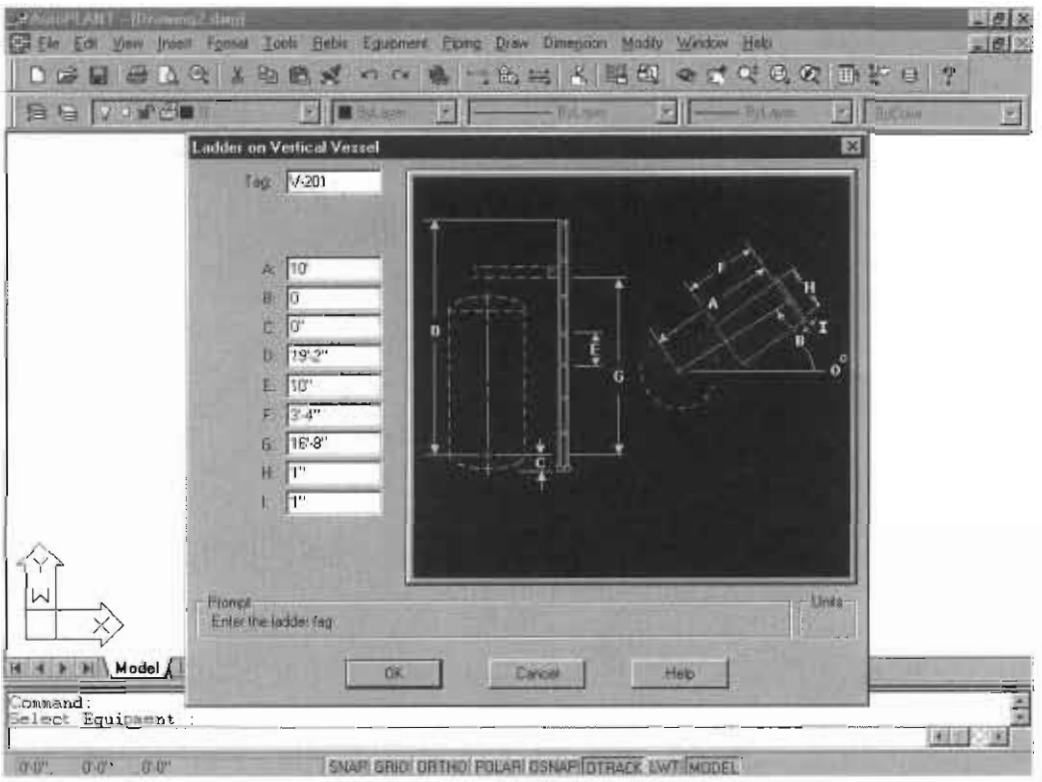

Figure 15-18. Ladder on vertical vessel.

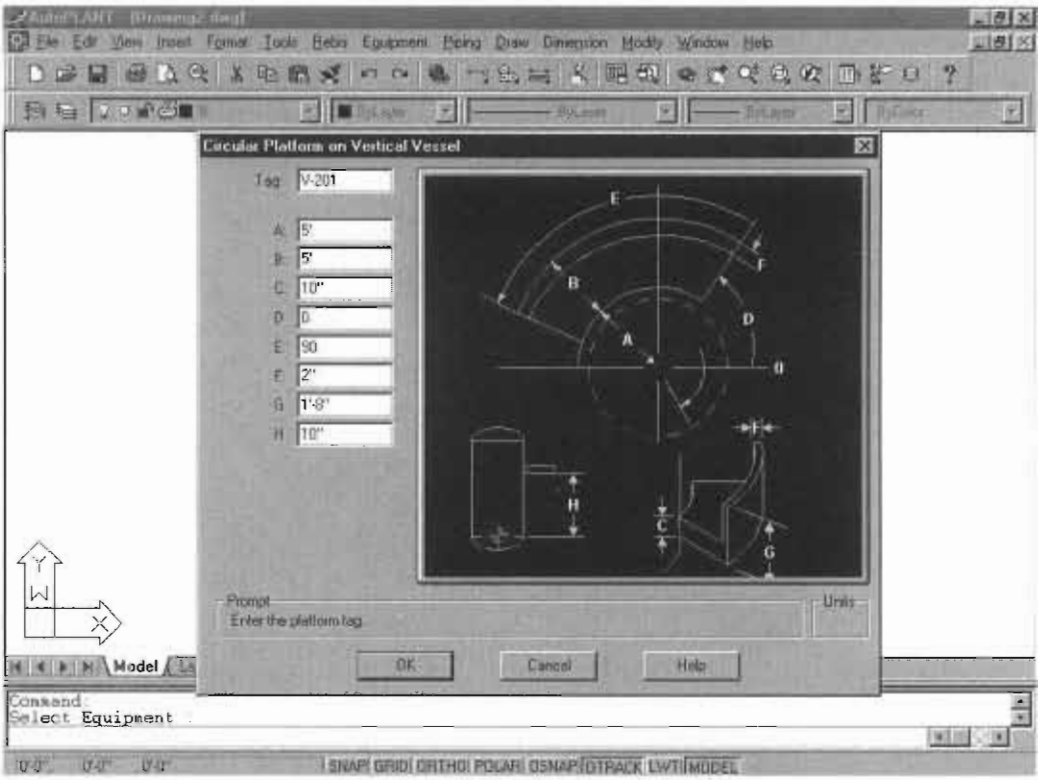

Figure 15-19. Circular platform on vertical vessel.

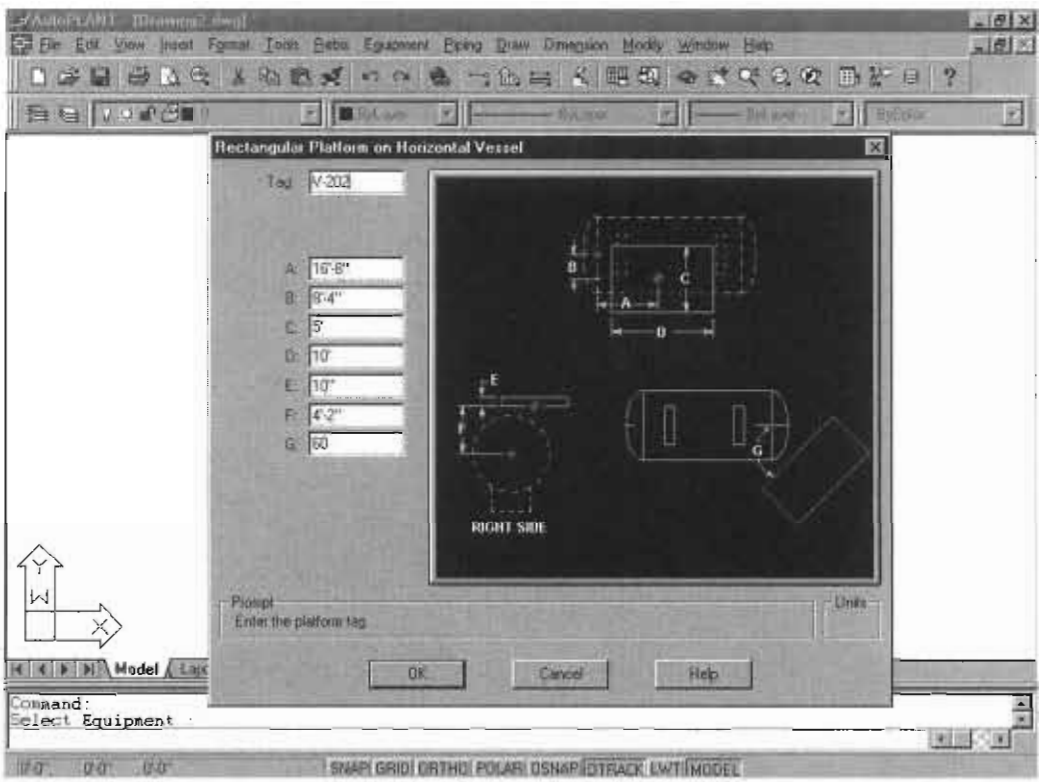

Figure 15-20. Rectangular platform on horizontal vessel.

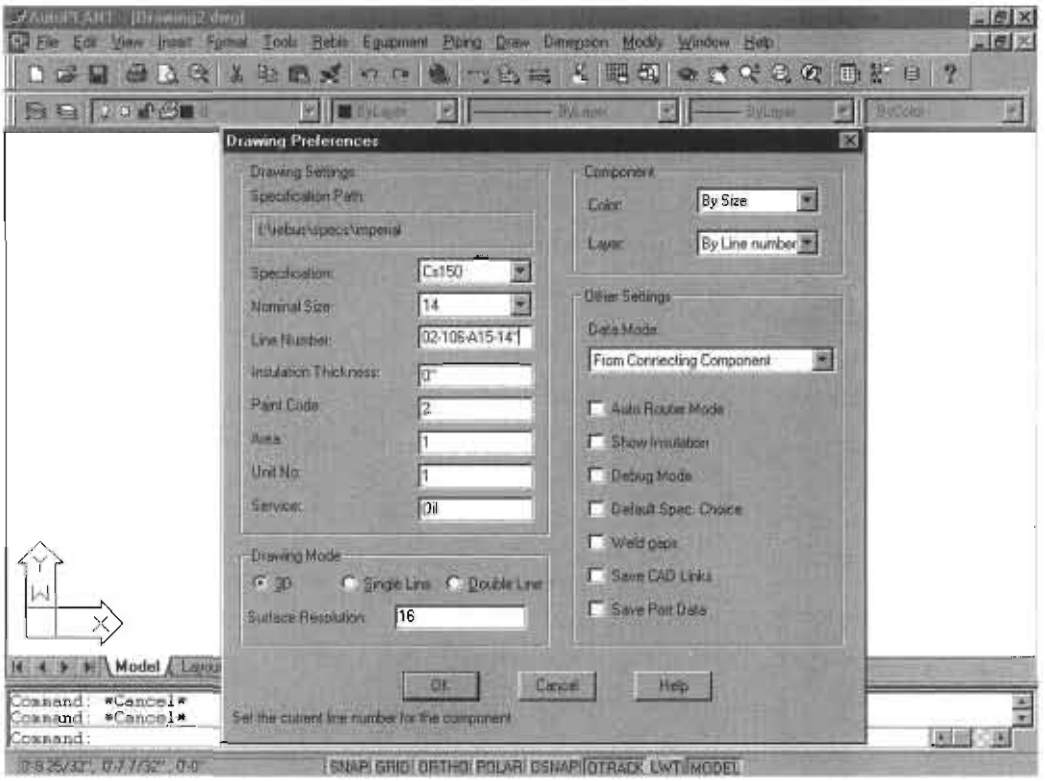

Figure 15-21. Drawing preferences.

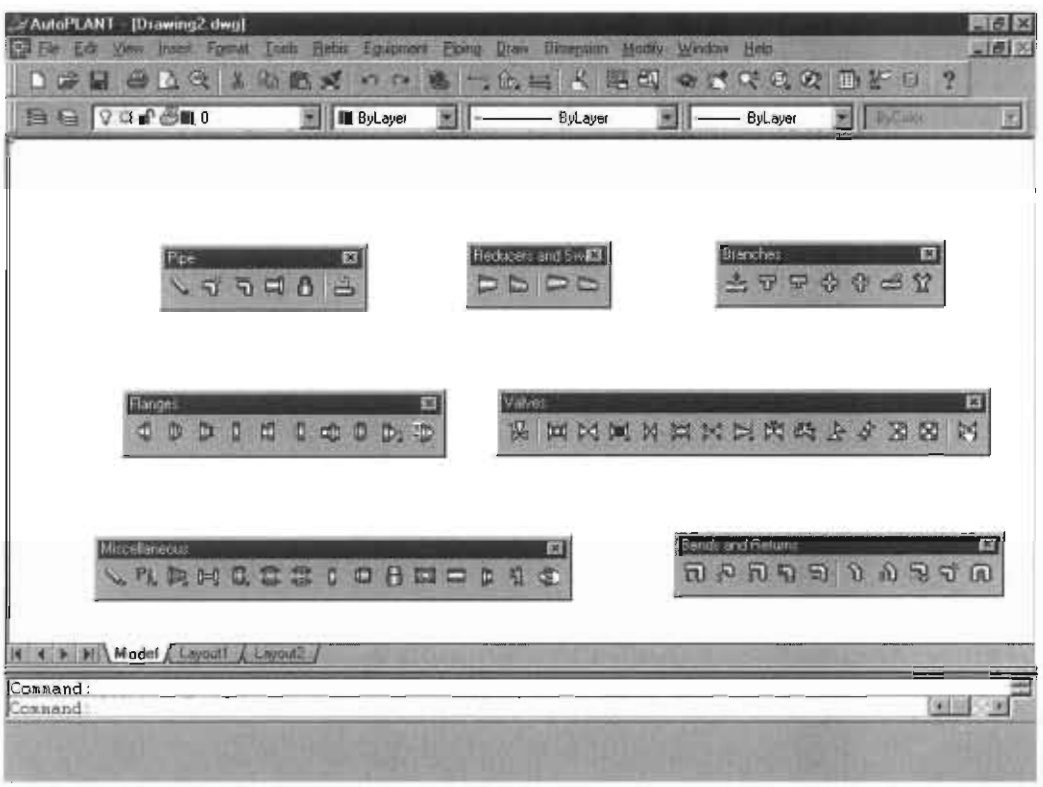

Figure 15-22. Flanges, bends, valves and various other toolbars.

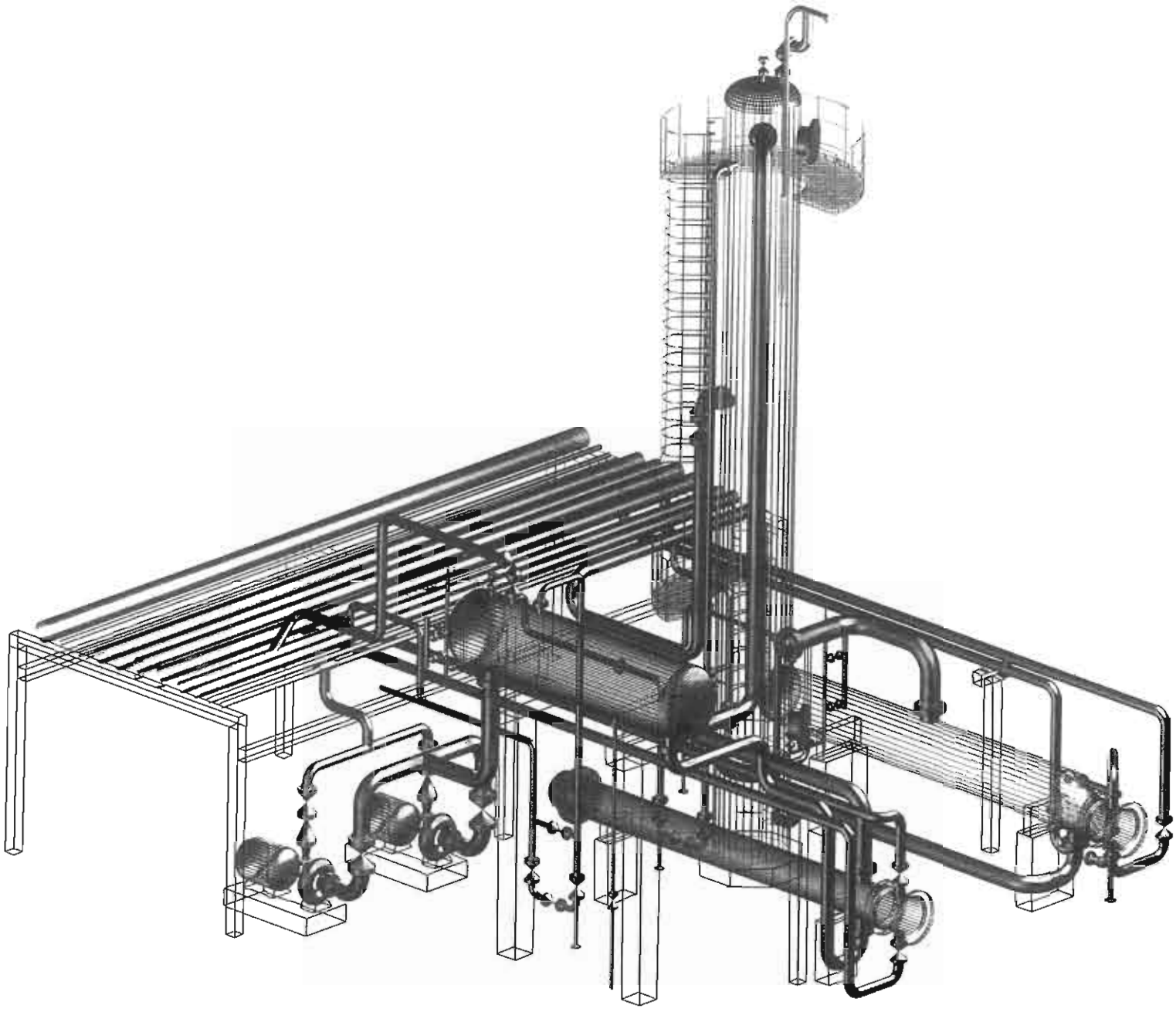

Figure 15-23. 3-D model of Unit 01.

Appendix A
Dimensional Data—p. 256

Appendix B
Review of Lettering—p. 292

Appendix C
Alphabet of Lines—p. 294

Appendix D
Review of Math—p. 295

Appendix E
Use of the Calculator—p. 296

Appendix F
Architect's Scale—p. 299

WELDED FITTINGS-FLANGES 150# RFWN

NOM. PIPE SIZE (in)		2"	2 1/2"	3"	4"	6"	8"	10"	12"	14"	16"	18"
WELD FITTINGS	O.D. Of PIPE	2 3/8	2 7/8	3 1/2	4 1/2	6 5/8	8 5/8	10 3/4	12 3/4	14	16	18
	90°L.R. ELL A	3	3 3/4	4 1/2	6	9	12	15	18	21	24	27
	45°L.R. ELL B	1 3/8	1 3/4	2	2 1/2	3 3/4	5	6 1/4	7 1/2	8 3/4	10	11 1/4
	HALF TEE C	2 1/2	3	3 3/8	4 1/8	5 5/8	7	8 1/2	10	11	12	13 1/2
	REDUCER H	3	3 1/2	3 1/2	4	5 1/2	6	7	8	13	14	15

STD. 90° & 45°

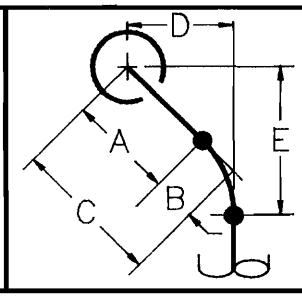

	2"	2 1/2"	3"	4"	6"	8"	10"	12"	14"	16"	18"
A	3	3 3/4	4 1/2	6	9	12	15	18	21	24	27
B	1 3/8	1 3/4	2	2 1/2	3 3/4	5	6 1/4	7 1/2	8 3/4	10	11 1/4
C	4 3/8	5 1/2	6 1/2	8 1/2	12 3/4	17	21 1/4	25 1/2	29 3/4	34	38 1/4
D	3 1/8	3 7/8	4 5/8	6	9	12	15	18	21 1/16	24 1/16	27 1/16
E	4 1/2	5 5/8	6 5/8	8 1/2	12 3/4	17	21 1/4	25 1/2	29 13/16	34 1/16	38 5/16

FITTING MAKE UP	2"	2 1/2"	3"	4"	6"	8"	10"	12"	14"	16"	18"
90°&WN FLG	5 1/2	6 1/2	7 1/4	9	12 1/2	16	19	22 1/2	26	29	32 1/2
TEE&WN FLG	5	5 3/4	6 1/8	7 1/8	9 1/8	11	12 1/2	14 1/2	16	17	19 3/4
45°&WN FLG	3 7/8	4 1/2	4 3/4	5 1/2	7 1/4	9	10 1/4	12	13 3/4	15	19

RFWN FLANGES

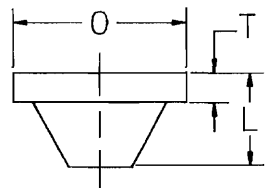

	2"	2 1/2"	3"	4"	6"	8"	10"	12"	14"	16"	18"
O	6	7	7 1/2	9	11	13 1/2	16	19	21	23 1/2	25
L	2 1/2	2 3/4	2 3/4	3	3 1/2	4	4	4 1/2	5	5	5 1/2
T	3/4	7/8	15/16	15/16	1	1 1/8	1 3/16	1 1/4	1 3/8	1 7/16	1 9/16

1/16" RAISED FACE INCLUDED ON 'L' & 'T' DIMENSIONS

RTJ FLANGES

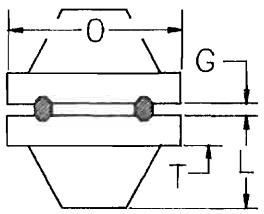

	2"	2 1/2"	3"	4"	6"	8"	10"	12"	14"	16"	18"
O	6	7	7 1/2	9	11	13 1/2	16	19	21	23 1/2	25
L	2 3/4	3	3	3 1/4	3 3/4	4 1/4	4 1/4	4 3/4	5 1/4	5 1/4	5 3/4
T	1	1 1/8	1 3/16	1 3/16	1 1/4	1 3/8	1 7/16	1 1/2	1 5/8	1 11/16	1 13/16
G	3/16	3/16	3/16	3/16	3/16	3/16	3/16	3/16	1/8	1/8	1/8

NOTE: ALL DIMENSIONS ARE IN INCHES 150#

VALVES 150#

NOMINAL PIPE SIZES (in)		2	3	4	6	8	10	12	14	16	18
O.D. of PIPE		$2\frac{3}{8}$	$3\frac{1}{2}$	$4\frac{1}{2}$	$6\frac{5}{8}$	$8\frac{5}{8}$	$10\frac{3}{4}$	$12\frac{3}{4}$	14	16	18
VALVES – GATE	L	7	8	9	$10\frac{1}{2}$	$11\frac{1}{2}$	13	14	15	16	17
	H	$15\frac{3}{4}$	$20\frac{3}{4}$	$25\frac{3}{4}$	$35\frac{1}{4}$	44	$52\frac{1}{2}$	$60\frac{1}{2}$	$70\frac{1}{4}$	$79\frac{3}{4}$	89
	O	8	9	10	14	16	18	18	22	24	27
VALVES – GLOBE	L	8	$9\frac{1}{2}$	$11\frac{1}{2}$	16	$19\frac{1}{2}$	*	*	*	*	*
	H	$13\frac{3}{4}$	$16\frac{1}{2}$	$19\frac{3}{4}$	$24\frac{1}{2}$	26	*	*	*	*	*
	O	8	9	10	12	16	*	*	*	*	*
VALVES – CONTROL	L	10	$11\frac{3}{4}$	$13\frac{7}{8}$	$17\frac{3}{4}$	$21\frac{3}{8}$	$26\frac{1}{2}$	*	*	*	*
	H	$27\frac{7}{8}$	$28\frac{7}{16}$	$29\frac{7}{16}$	38	$39\frac{1}{4}$	$46\frac{1}{4}$	*	*	*	*
	O	$13\frac{1}{8}$	$13\frac{1}{8}$	$13\frac{1}{8}$	16	16	$21\frac{1}{8}$	*	*	*	*
VALVES – CHECK	L	8	$9\frac{1}{2}$	$11\frac{1}{2}$	14	$19\frac{1}{2}$	$24\frac{1}{2}$	$27\frac{1}{2}$	35	39	*
	H	5	6	7	9	$10\frac{1}{4}$	$12\frac{1}{8}$	$13\frac{3}{4}$	18	$20\frac{1}{2}$	*

NOTE: ALL DIMENSIONS ARE IN INCHES
* REFER to VENDOR CATALOG

150# RF

VALVES – GATE	L	$7\frac{1}{2}$	$8\frac{1}{2}$	$9\frac{1}{2}$	11	12	$13\frac{1}{2}$	$14\frac{1}{2}$	$15\frac{1}{2}$	$16\frac{1}{2}$	$17\frac{1}{2}$
	H	$15\frac{3}{4}$	$20\frac{3}{4}$	$25\frac{3}{4}$	$35\frac{1}{4}$	43	$52\frac{1}{2}$	$60\frac{1}{2}$	$70\frac{1}{4}$	$79\frac{3}{4}$	89
	O	8	9	10	14	14	18	18	22	24	27
VALVES – GLOBE	L	$8\frac{1}{2}$	10	12	$16\frac{1}{2}$	20	*	*	*	*	*
	H	$13\frac{3}{4}$	$16\frac{1}{2}$	$19\frac{3}{4}$	$24\frac{1}{2}$	26	*	*	*	*	*
	O	8	9	10	12	16	*	*	*	*	*
VALVES – CONTROL	L	$10\frac{1}{2}$	$12\frac{1}{4}$	$14\frac{3}{8}$	$18\frac{1}{4}$	$21\frac{7}{8}$	27	*	*	*	*
	H	$27\frac{7}{8}$	$28\frac{7}{16}$	$29\frac{7}{16}$	38	$39\frac{1}{4}$	$46\frac{1}{4}$	*	*	*	*
	O	$13\frac{1}{8}$	$13\frac{1}{8}$	$13\frac{1}{8}$	16	16	$21\frac{1}{8}$	*	*	*	*
VALVES – CHECK	L	$8\frac{1}{2}$	10	12	$14\frac{1}{2}$	20	25	28	$35\frac{1}{2}$	$39\frac{1}{2}$	*
	H	5	6	7	9	$10\frac{1}{4}$	$12\frac{1}{8}$	$13\frac{3}{4}$	18	$20\frac{1}{2}$	*

NOTE: ALL DIMENSIONS ARE IN INCHES
* REFER to VENDOR CATALOG

150# RTJ

WELDED FITTINGS-FLANGES 300# RFWN

NOM. PIPE SIZE (in)		2"	2½"	3"	4"	6"	8"	10"	12"	14"	16"	18"
WELD FITTINGS: O.D. Of PIPE		2⅜	2⅞	3½	4½	6⅝	8⅝	10¾	12¾	14	16	18
90°L.R. ELL	A	3	3¾	4½	6	9	12	15	18	21	24	27
45°L.R. ELL	B	1⅜	1¾	2	2½	3¾	5	6¼	7½	8¾	10	11¼
HALF TEE	C	2½	3	3⅜	4⅛	5⅝	7	8½	10	11	12	13½
REDUCER	H	3	3½	3½	4	5½	6	7	8	13	14	15

STD. 90° & 45°

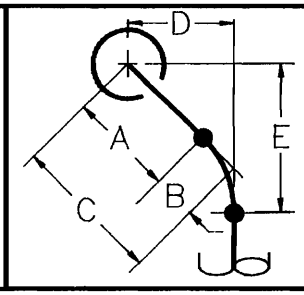

	A	B	C	D	E
	3	1⅜	4⅜	3⅛	4½
	3¾	1¾	5½	3⅞	5⅝
	4½	2	6½	4⅝	6⅝
	6	2½	8½	6	8½
	9	3¾	12¾	9	12¾
	12	5	17	12	17
	15	6¼	21¼	15	21¼
	18	7½	25½	18	25½
	21	8¾	29¾	21 1/16	29 13/16
	24	10	34	24 1/16	34 1/16
	27	11¼	38¼	27 1/16	38 5/16

MAKE UP FITTING												
90°&WN FLG	5¾	6¾	7⅝	9⅜	12⅞	16⅜	19⅝	23⅛	26⅝	29¾	33¼
TEE&WN FLG	5½	6	6½	7½	9⅜	11⅜	13⅛	15⅛	16⅝	17¾	19¾
45°&WN FLG	4⅛	4¾	5⅛	5⅞	7⅝	9⅜	10⅞	12⅝	14⅜	15¾	17½

RFWN FLANGES

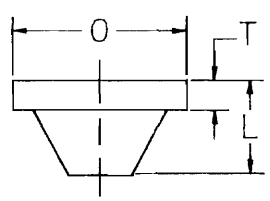

O	6½	7½	8¼	10	12½	15	17½	20½	23	25½	28
L	2¾	3	3⅛	3⅜	3⅞	4⅜	4⅝	5⅛	5⅝	5¾	6¼
T	⅞	1	1⅛	1¼	1 7/16	1⅝	1⅞	2	2⅛	2¼	2⅜

1/16" RAISED FACE INCLUDED ON 'L' & 'T' DIMENSIONS

RTJ FLANGES

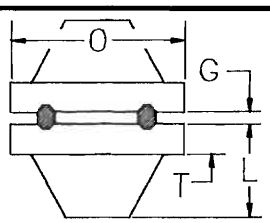

O	6½	7½	8¼	10	12½	15	17½	20½	23	25½	28
L	3 1/16	3 5/16	3 7/16	3 11/16	4 3/16	4 11/16	4 15/16	5 7/16	5 15/16	6 1/16	6 9/16
T	1⅛	1¼	1⅜	1½	1 11/16	1⅞	2⅛	2¼	2⅜	2½	2⅝
G	¼	¼	¼	¼	¼	¼	¼	¼	¼	¼	¼

NOTE: ALL DIMENSIONS ARE IN INCHES 300#

VALVES 300#

NOMINAL PIPE SIZES (in)		2	3	4	6	8	10	12	14	16	18
O.D. of PIPE		$2\frac{3}{8}$	$3\frac{1}{2}$	$4\frac{1}{2}$	$6\frac{5}{8}$	$8\frac{5}{8}$	$10\frac{3}{4}$	$12\frac{3}{4}$	14	16	18
VALVES – GATE	L	$8\frac{1}{2}$	$11\frac{1}{8}$	12	$15\frac{7}{8}$	$16\frac{1}{2}$	18	$19\frac{3}{4}$	30	33	36
	H	$18\frac{1}{2}$	$23\frac{1}{4}$	$28\frac{1}{4}$	$38\frac{1}{8}$	47	$56\frac{1}{2}$	$64\frac{1}{4}$	$74\frac{3}{4}$	$80\frac{1}{8}$	91
	O	8	9	10	14	16	20	20	27	27	30
VALVES – GLOBE	L	$10\frac{1}{2}$	$12\frac{1}{2}$	14	$17\frac{1}{2}$	22	*	*	*	*	*
	H	$17\frac{3}{4}$	$20\frac{1}{2}$	$24\frac{3}{4}$	$29\frac{3}{4}$	$36\frac{1}{2}$	*	*	*	*	*
	O	9	10	14	18	24	*	*	*	*	*
VALVES – CONTROL	L	$10\frac{1}{2}$	$12\frac{1}{2}$	$14\frac{1}{2}$	$18\frac{5}{8}$	$22\frac{3}{8}$	$27\frac{7}{8}$	*	*	*	*
	H	$27\frac{7}{8}$	$28\frac{7}{16}$	$29\frac{7}{16}$	38	$39\frac{1}{4}$	$46\frac{1}{4}$	*	*	*	*
	O	$13\frac{1}{8}$	$13\frac{1}{8}$	$13\frac{1}{8}$	16	16	$21\frac{1}{8}$	*	*	*	*
VALVES – CHECK	L	$10\frac{1}{2}$	$12\frac{1}{2}$	14	$17\frac{1}{2}$	21	$24\frac{1}{2}$	28	*	*	*
	H	$6\frac{3}{4}$	$8\frac{1}{2}$	$9\frac{3}{4}$	$11\frac{3}{4}$	14	15	$16\frac{3}{4}$	*	*	*

NOTE: ALL DIMENSIONS ARE IN INCHES
* REFER to VENDOR CATALOG

300# RF

VALVES – GATE	L	$9\frac{1}{8}$	$11\frac{3}{4}$	$12\frac{5}{8}$	$16\frac{1}{2}$	$17\frac{1}{8}$	$18\frac{5}{8}$	$20\frac{3}{8}$	$30\frac{5}{8}$	$33\frac{5}{8}$	$36\frac{5}{8}$
	H	$18\frac{1}{2}$	$23\frac{1}{4}$	$28\frac{1}{4}$	$38\frac{1}{8}$	47	$56\frac{1}{2}$	$64\frac{1}{4}$	$74\frac{3}{4}$	$80\frac{1}{8}$	91
	O	8	9	10	14	16	20	20	27	27	30
VALVES – GLOBE	L	$11\frac{1}{8}$	$13\frac{1}{8}$	$14\frac{5}{8}$	$18\frac{1}{8}$	$22\frac{5}{8}$	*	*	*	*	*
	H	$17\frac{3}{4}$	$20\frac{1}{2}$	$24\frac{3}{4}$	$29\frac{3}{4}$	$36\frac{1}{2}$	*	*	*	*	*
	O	9	10	14	18	24	*	*	*	*	*
VALVES – CONTROL	L	$11\frac{1}{8}$	$13\frac{1}{8}$	$15\frac{1}{8}$	$19\frac{1}{4}$	23	$28\frac{1}{2}$	*	*	*	*
	H	$27\frac{7}{8}$	$28\frac{7}{16}$	$29\frac{7}{16}$	38	$39\frac{1}{4}$	$46\frac{1}{4}$	*	*	*	*
	O	$13\frac{1}{8}$	$13\frac{1}{8}$	$13\frac{1}{8}$	16	16	$21\frac{1}{8}$	*	*	*	*
VALVES – CHECK	L	$11\frac{1}{8}$	$13\frac{1}{8}$	$14\frac{5}{8}$	$18\frac{1}{8}$	$21\frac{5}{8}$	$25\frac{1}{8}$	$28\frac{5}{8}$	*	*	*
	H	$6\frac{3}{4}$	$8\frac{1}{2}$	$9\frac{3}{4}$	$11\frac{3}{4}$	14	15	$16\frac{3}{4}$	*	*	*

NOTE: ALL DIMENSIONS ARE IN INCHES
* REFER to VENDOR CATALOG

300# RTJ

WELDED FITTINGS-FLANGES 600# RFWN

NOM. PIPE SIZE (in)		2"	2½"	3"	4"	6"	8"	10"	12"	14"	16"	18"
WELD FITTINGS: O.D. Of PIPE		2 3/8	2 7/8	3 1/2	4 1/2	6 5/8	8 5/8	10 3/4	12 3/4	14	16	18
90°L.R. ELL	A	3	3 3/4	4 1/2	6	9	12	15	18	21	24	27
45°L.R. ELL	B	1 3/8	1 3/4	2	2 1/2	3 3/4	5	6 1/4	7 1/2	8 3/4	10	11 1/4
HALF TEE	C	2 1/2	3	3 3/8	4 1/8	5 5/8	7	8 1/2	10	11	12	13 1/2
REDUCER	H	3	3 1/2	3 1/2	4	5 1/2	6	7	8	13	14	15

STD. 90° & 45°

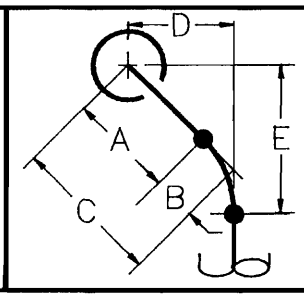

	2"	2½"	3"	4"	6"	8"	10"	12"	14"	16"	18"
A	3	3 3/4	4 1/2	6	9	12	15	18	21	24	27
B	1 3/8	1 3/4	2	2 1/2	3 3/4	5	6 1/4	7 1/2	8 3/4	10	11 1/4
C	4 3/8	5 1/2	6 1/2	8 1/2	12 3/4	17	21 1/4	25 1/2	29 3/4	34	38 1/4
D	3 1/8	3 7/8	4 5/8	6	9	12	15	18	21 1/16	24 1/16	27 1/16
E	4 1/2	5 5/8	6 5/8	8 1/2	12 3/4	17	21 1/4	25 1/2	29 13/16	34 1/16	38 5/16

FITTING MAKE UP	2"	2½"	3"	4"	6"	8"	10"	12"	14"	16"	18"
90°&WN FLG	6 1/8	7 1/8	8	10 1/4	13 7/8	17 1/2	21 1/4	24 3/8	27 3/4	31 1/4	34 1/2
TEE&WN FLG	5 5/8	6 3/8	6 7/8	8 3/8	10 1/2	12 1/2	14 3/4	16 3/8	17 3/4	19 1/4	22 1/2
45°&WN FLG	4 1/2	5 1/8	5 1/2	6 3/4	8 5/8	10 1/2	12 1/2	13 7/8	15 1/2	17 1/4	18 3/4

RFWN FLANGES

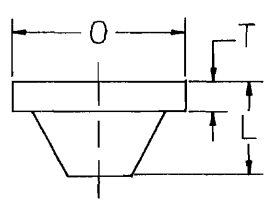

	2"	2½"	3"	4"	6"	8"	10"	12"	14"	16"	18"
O	6 1/2	7 1/2	8 1/4	10 3/4	14	16 1/2	20	22	23 3/4	27	29 1/4
L	3 1/8	3 3/8	3 1/2	4 1/4	4 7/8	5 1/2	6 1/4	6 3/8	6 3/4	7 1/4	7 1/2
T	1 1/4	1 3/8	1 1/2	1 3/4	2 1/8	2 7/16	2 3/4	2 7/8	3	3 1/4	3 1/2

1/4" RAISED FACE INCLUDED ON 'L' & 'T' DIMENSIONS

RTJ FLANGES

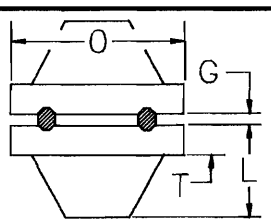

	2"	2½"	3"	4"	6"	8"	10"	12"	14"	16"	18"
O	6 1/2	7 1/2	8 1/4	10 3/4	14	16 1/2	20	22	23 3/4	27	29 1/4
L	3 3/16	3 7/16	3 9/16	4 5/16	4 15/16	5 9/16	6 5/16	6 7/16	6 13/16	7 5/16	7 9/16
T	1 1/2	1 5/8	1 3/4	2	2 3/8	2 11/16	3	3 1/8	3 1/4	3 1/2	3 3/4
G	3/16	3/16	3/16	3/16	3/16	3/16	3/16	3/16	3/16	3/16	3/16

NOTE: ALL DIMENSIONS ARE IN INCHES 600#

VALVES 600#

NOMINAL PIPE SIZES (in)		2	3	4	6	8	10	12	14	16	18
O.D. of PIPE		$2\frac{3}{8}$	$3\frac{1}{2}$	$4\frac{1}{2}$	$6\frac{5}{8}$	$8\frac{5}{8}$	$10\frac{3}{4}$	$12\frac{3}{4}$	14	16	18
VALVES – GATE 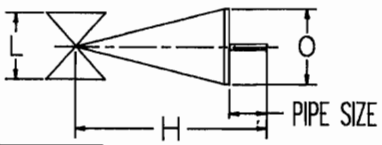	L	$11\frac{1}{2}$	14	17	22	26	31	33	35	39	43
	H	$18\frac{1}{4}$	$25\frac{3}{4}$	32	$42\frac{3}{4}$	$52\frac{1}{4}$	$62\frac{1}{4}$	70	$77\frac{1}{4}$	$83\frac{3}{4}$	$93\frac{3}{4}$
	O	8	10	14	20	24	27	27	30	30	36
VALVES – GLOBE 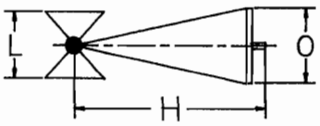	L	$11\frac{1}{2}$	14	17	22	*	*	*	*	*	*
	H	19	$23\frac{1}{2}$	$27\frac{1}{2}$	35	*	*	*	*	*	*
	O	10	12	18	24	*	*	*	*	*	*
VALVES – CONTROL 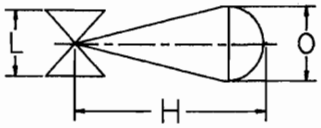	L	$11\frac{1}{4}$	$13\frac{1}{4}$	$15\frac{1}{2}$	20	24	$29\frac{5}{8}$	*	*	*	*
	H	$27\frac{7}{8}$	$28\frac{7}{16}$	$29\frac{7}{16}$	38	$39\frac{1}{4}$	$46\frac{1}{4}$	*	*	*	*
	O	$13\frac{1}{8}$	$13\frac{1}{8}$	$13\frac{1}{8}$	16	16	$21\frac{1}{8}$	*	*	*	*
VALVES – CHECK 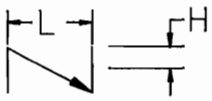	L	$11\frac{1}{2}$	14	17	22	26	31	33	*	*	*
	H	7	9	$10\frac{1}{4}$	$13\frac{1}{2}$	$15\frac{1}{4}$	$18\frac{3}{4}$	$21\frac{1}{2}$	*	*	*

NOTE: ALL DIMENSIONS ARE IN INCHES
* REFER to VENDOR CATALOG

600# RF

VALVES – GATE 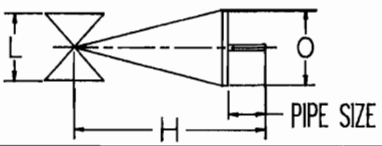	L	$11\frac{5}{8}$	$14\frac{1}{8}$	$17\frac{1}{8}$	$22\frac{1}{8}$	$26\frac{1}{8}$	$31\frac{1}{8}$	$33\frac{1}{8}$	$35\frac{1}{8}$	$39\frac{1}{8}$	$43\frac{1}{8}$
	H	$18\frac{1}{4}$	$25\frac{3}{4}$	32	$42\frac{3}{4}$	$52\frac{1}{4}$	$62\frac{1}{4}$	70	$77\frac{1}{4}$	$83\frac{3}{4}$	$93\frac{3}{4}$
	O	8	10	14	20	24	27	27	30	30	36
VALVES – GLOBE 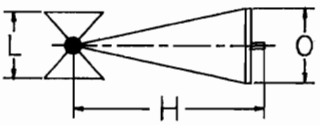	L	$11\frac{5}{8}$	$14\frac{1}{8}$	$17\frac{1}{8}$	$22\frac{1}{8}$	*	*	*	*	*	*
	H	19	$23\frac{1}{2}$	$27\frac{1}{2}$	35	*	*	*	*	*	*
	O	10	12	18	24	*	*	*	*	*	*
VALVES – CONTROL 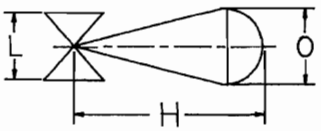	L	$11\frac{3}{8}$	$13\frac{3}{8}$	$15\frac{5}{8}$	$20\frac{1}{8}$	$24\frac{1}{8}$	$29\frac{3}{4}$	*	*	*	*
	H	$27\frac{7}{8}$	$28\frac{7}{16}$	$29\frac{7}{16}$	38	$39\frac{1}{4}$	$46\frac{1}{4}$	*	*	*	*
	O	$13\frac{1}{8}$	$13\frac{1}{8}$	$13\frac{1}{8}$	16	16	$21\frac{1}{8}$	*	*	*	*
VALVES – CHECK 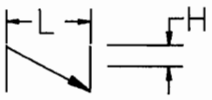	L	$11\frac{5}{8}$	$14\frac{1}{8}$	$17\frac{1}{8}$	$22\frac{1}{8}$	$26\frac{1}{8}$	$31\frac{1}{8}$	$33\frac{1}{8}$	*	*	*
	H	7	9	$10\frac{1}{4}$	$13\frac{1}{2}$	$15\frac{1}{4}$	$18\frac{3}{4}$	$21\frac{1}{2}$	*	*	*

NOTE: ALL DIMENSIONS ARE IN INCHES
* REFER to VENDOR CATALOG

600# RTJ

SCREWED FITTINGS

NOMINAL PIPE SIZES (in)			1/2"	3/4"	1"	1 1/4"	1 1/2"	2"	2 1/2"	3"
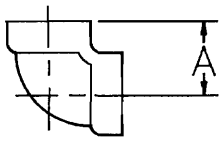	3000 # 90° ELL	A	1 5/16	1 1/2	1 3/4	2	2 3/8	2 1/2	3 3/8	3 3/4
	6000 #	A	1 1/2	1 3/4	2	2 3/8	2 1/2	3 3/8	3 3/4	4 3/16
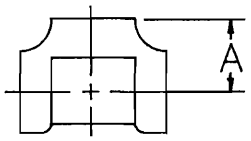	3000 # TEE	A	1 5/16	1 1/2	1 3/4	2	2 3/8	2 1/2	3 3/8	3 3/4
	6000 #	A	1 1/2	1 3/4	2	2 3/8	2 1/2	3 3/8	3 3/4	4 3/16
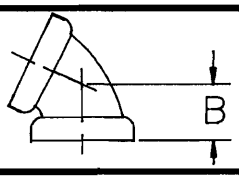	3000 # 45° ELL	B	1	1 1/8	1 5/16	1 7/16	1 11/16	2	2 1/16	2 1/2
	6000 #	B	1 1/8	1 5/16	1 11/32	1 11/16	1 23/32	2 1/16	2 1/2	3 1/8
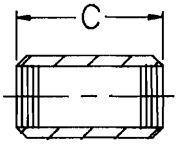	3000 # COUPLING	C	1 7/8	2	2 3/8	2 5/8	3 1/8	3 3/8	3 5/8	4 1/4
	6000 #	C	1 7/8	2	2 3/8	2 5/8	3 1/8	3 3/8	3 5/8	4 1/4
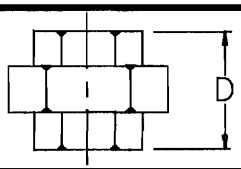	3000 # UNION	D	2 1/8	2 5/16	2 1/2	2 13/16	3 1/8	3 1/2	3 15/16	4 1/2
	6000 #	D	2 7/8	3 3/8	3 5/8	3 7/8	4 3/16	4 5/8	5 3/16	5 15/16
NORMAL THREAD ENGAGEMENT	3000 #		1/2	9/16	11/16	11/16	11/16	3/4	15/16	1
	6000 #		1/2	9/16	11/16	11/16	11/16	3/4	15/16	1
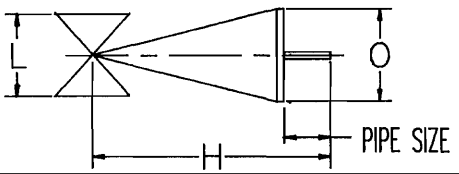	GATE	L	3 9/16	4 1/2	4 3/4	5	5 1/2	7	*	*
		H	6 1/2	8 1/4	9 9/16	10 7/8	11 7/16	14 1/16	*	*
		O	4	5 1/2	5 3/4	6 1/2	7	8	*	*
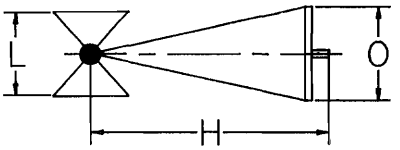	GLOBE	L	3 5/8	4 5/8	6 1/4	7	7 3/4	9	*	*
		H	6 7/8	8 7/16	10 3/8	11 1/2	12 3/16	14 1/2	*	*
		O	4	4 3/4	5 3/4	8	8	8	*	*
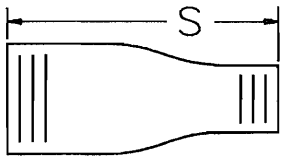	SWAGE	OUTLET	1/4 TO 3/8	1/4 TO 1/2	1/4 TO 3/4	1/4 TO 1	1/4 TO 1 1/4	1/4 TO 1 1/2	1/4 TO 2 1/4	1/4 TO 2 1/2
		S	2 3/4	3	3 1/2	4	4 1/2	6 1/2	7	8

SOCKET WELD FITTINGS

NOMINAL PIPE SIZES (in)			1/2"	3/4"	1"	1 1/4"	1 1/2"	2"	2 1/2"	3"
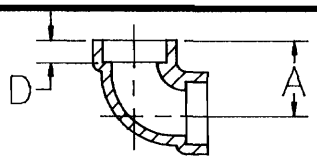	3000 # 90° ELL	A	1 1/8	1 5/16	1 1/2	1 3/4	2	2 3/8	3	3 3/8
	6000 #	A	1 5/16	1 1/2	1 3/4	2	2 3/8	2 1/2	3 1/4	3 3/4
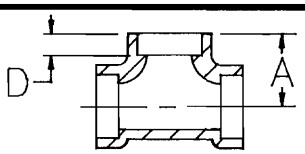	3000 # TEE	A	1 1/8	1 5/16	1 1/2	1 3/4	2	2 3/8	3	3 3/8
	6000 #	A	1 5/16	1 1/2	1 3/4	2	2 3/8	2 1/2	3 1/4	3 3/4
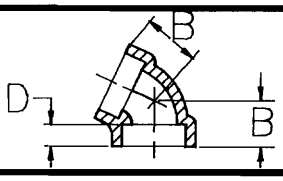	3000 # 45° ELL	B	7/8	1	1 1/8	1 5/16	1 7/16	1 11/16	2 1/16	2 1/2
	6000 #	B	1	1 1/8	1 5/16	1 11/32	1 11/16	1 23/32	2 1/16	2 1/2
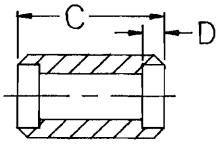	3000 # COUPLING	C	1 3/8	1 1/2	1 3/4	1 7/8	2	2 1/2	2 1/2	2 3/4
	6000 #	C	1 3/8	1 1/2	1 3/4	1 7/8	2	2 1/2	2 1/2	2 3/4
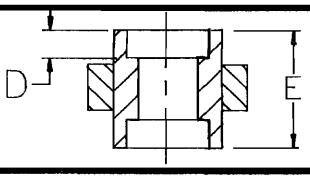	3000 # UNION	E	2 1/8	2 5/16	2 1/2	2 13/16	3 1/8	3 1/2	3 15/16	4 1/2
	6000 #	E	2 7/8	3 3/8	3 5/8	3 7/8	4 3/16	4 5/8	5 3/16	5 15/16
SOCKET DEPTH	3000 #	D	1/2	9/16	5/8	11/16	3/4	7/8	1 1/8	1 3/8
	6000 #	D	11/16	3/4	7/8	15/16	1	1 1/8	1 1/2	1 5/8
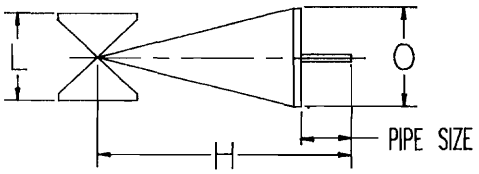	GATE	L	3 9/16	4 1/2	4 3/4	5	5 1/2	7	*	*
		H	6 1/2	8 1/4	9 9/16	10 7/8	11 7/16	14 1/16	*	*
		O	4	5 1/2	5 3/4	6 1/2	7	8	*	*
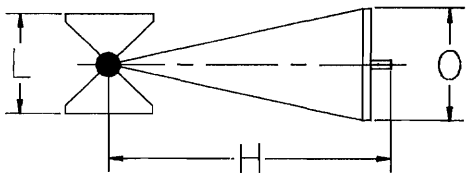	GLOBE	L	3 5/8	4 5/8	6 1/4	7	7 3/4	9	*	*
		H	6 7/8	8 7/16	10 3/8	11 1/2	12 3/16	14 1/2	*	*
		O	4	4 3/4	5 3/4	8	8	8	*	*
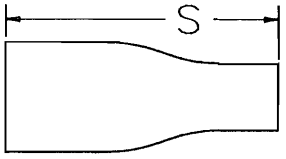	SWAGE	OUTLET	1/4 TO 3/8	1/4 TO 1/2	1/4 TO 3/4	1/4 TO 1	1/4 TO 1 1/4	1/4 TO 1 1/2	1/4 TO 2 1/4	1/4 TO 2 1/2
		S	2 3/4	3	3 1/2	4	4 1/2	6 1/2	7	8

WELDED FITTINGS-FLANGES 150# RFWN

	NOM. PIPE SIZE (mm)		50.8	63.5	76.2	101.6	152.4	203.2	254	304.8	355.6	406.4	457.2
WELD FITTINGS	O.D. Of PIPE		60.3	73.0	88.9	114.3	152.4	203.2	254	304.8	355.6	406.4	457.2
	90°L.R. ELL	A	76.2	95.3	114.3	152.4	228.6	304.8	381.0	457.2	533.4	609.6	685.8
	45°L.R. ELL	B	34.9	44.5	50.8	63.5	95.3	127.0	158.8	190.5	222.3	254.0	285.8
	HALF TEE	C	63.5	76.2	85.7	104.8	142.9	177.8	215.9	254	279.4	304.8	342.9
	REDUCER	H	76.2	88.9	88.9	101.6	139.7	152.4	177.8	203.2	330.2	355.6	381.0

STD. 90° & 45°												
	A	76.2	95.2	114.3	152.4	228.6	304.8	381.0	457.2	533.4	609.6	685.4
	B	34.9	44.5	50.8	63.5	95.3	127.0	158.8	190.5	222.3	254.0	285.8
	C	111.1	139.7	165.1	215.9	323.9	431.8	539.8	647.7	755.7	863.6	971.6
	D	79.4	98.4	117.5	152.4	228.6	304.8	304.8	457.2	535.0	611.2	687.4
	E	114.3	142.9	168.3	215.9	323.9	431.8	539.8	647.7	757.2	865.2	973.1

FITTING MAKE UP												
	90°&WN FLG	139.7	165.1	184.2	228.6	317.5	406.4	482.6	571.5	660.4	736.6	825.5
	TEE&WN FLG	127.0	146.1	155.6	181.0	231.8	279.4	317.5	368.3	406.4	431.8	482.6
	45°&WN FLG	98.4	114.3	120.7	139.7	184.2	228.6	260.4	304.8	349.3	381.0	482.6

RFWN FLANGES												
	O	152.4	177.8	190.5	228.6	279.4	342.9	406.4	482.6	533.4	596.9	635
	L	63.5	69.9	69.9	76.2	88.9	101.6	101.6	114.3	127	127	139.7
	T	19.1	22.2	23.8	23.8	25.4	28.6	30.2	31.8	34.9	36.5	39.7
	1.6 (mm) RAISED FACE INCLUDED ON 'L' & 'T' DIMENSIONS											

RTJ FLANGES												
	O	152.4	177.8	190.5	228.6	279.4	342.9	406.4	482.6	533.4	596.9	635.0
	L	69.9	76.2	76.2	82.6	95.3	108	108	120.7	133.4	133.4	146.1
	T	25.4	28.6	30.2	30.2	31.8	34.9	36.5	38.1	41.3	42.9	46
	G	4.8	4.8	4.8	4.8	4.8	4.8	4.8	4.8	3.2	3.2	3.2

NOTE: ALL DIMENSIONS ARE IN MILLIMETERS 150#

VALVES 150#

NOMINAL PIPE SIZES (mm)			50.8	76.2	101.6	152.4	203.2	254	304.8	355.6	406.4	457.2
O.D. of PIPE			60.3	88.9	114.3	168.3	219.1	273.1	323.9	355.6	406.4	457.2
VALVES	GATE	L	177.8	203.2	228.6	266.7	292.1	330.2	355.6	381	406.4	431.8
		H	400.1	527.1	654.1	895.4	1092.2	1333.5	1536.7	1784.4	2025.7	2260.6
		O	203.2	228.6	254	355.6	406.4	457.2	457.2	558.8	609.6	685.8
	GLOBE	L	203.2	241.3	292.1	406.4	495.3	*	*	*	*	*
		H	349.3	419.1	501.7	622.3	660.4	*	*	*	*	*
		O	203.2	228.6	254	304.8	406.4	*	*	*	*	*
	CONTROL	L	254	298.5	352.4	450.9	542.9	673.1	*	*	*	*
		H	708.0	722.3	747.7	965.2	997	1174.8	*	*	*	*
		O	333.4	333.4	333.4	406.4	406.4	536.6	*	*	*	*
	CHECK	L	203.2	241.3	292.1	355.6	495.3	622.3	698.5	889	990	*
		H	127	152.4	177.8	228.6	260.4	308	349.3	457.2	520.7	*

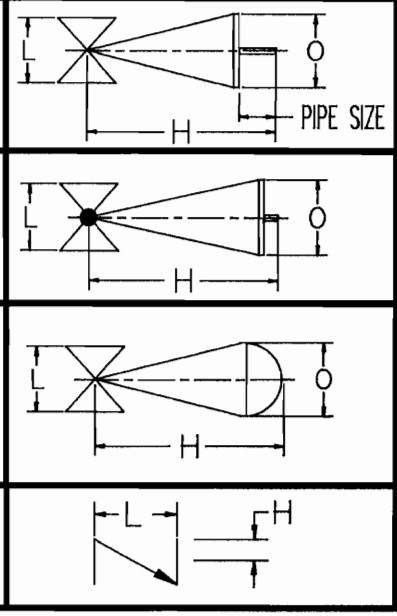

NOTE: ALL DIMENSIONS ARE IN MILLIMETERS
* REFER to VENDOR CATALOG

150# RF

VALVES	GATE	L	190.5	215.9	241.3	279.4	304.8	342.9	368.3	393.7	419.1	444.5
		H	400.1	527.1	654.1	895.4	1092.2	1333.5	1536.7	1784.4	2025.7	2260.6
		O	203.2	228.6	254	355.6	406.4	457.2	457.2	558.8	609.6	685.8
	GLOBE	L	215.9	254	304.8	419.1	508	*	*	*	*	*
		H	349.3	419.1	501.7	622.3	660.4	*	*	*	*	*
		O	203.2	228.6	254	304.8	406.4	*	*	*	*	*
	CONTROL	L	266.7	311.2	365.1	463.6	555.6	685.8	*	*	*	*
		H	708.0	722.3	747.7	965.2	997	1174.8	*	*	*	*
		O	333.4	333.4	333.4	406.4	406.4	536.6	*	*	*	*
	CHECK	L	215.9	254	304.8	368.3	508	635	711.2	901.7	1003.3	*
		H	127	152.4	177.8	228.6	260.4	308	349.3	457.2	520.7	*

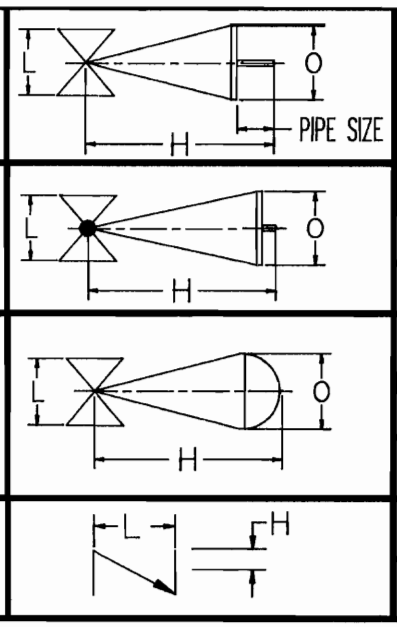

NOTE: ALL DIMENSIONS ARE IN MILLIMETERS
* REFER to VENDOR CATALOG

150# RTJ

WELDED FITTINGS-FLANGES 300# RFWN

NOM. PIPE SIZE (mm)		50.8	63.5	76.2	101.6	152.4	203.2	254	304.8	355.6	406.4	457.2
WELD FITTINGS	O.D. Of PIPE	60.3	73.0	88.9	114.3	152.4	203.2	254	304.8	355.6	406.4	457.2
	90°L.R. ELL A	76.2	95.3	114.3	152.4	228.6	304.8	381.0	457.2	533.4	609.6	685.8
	45°L.R. ELL B	34.9	44.5	50.8	63.5	95.3	127.0	158.8	190.5	222.3	254.0	285.8
	HALF TEE C	63.5	76.2	85.7	104.8	142.9	177.8	215.9	254	279.4	304.8	342.9
	REDUCER H	76.2	88.9	88.9	101.6	139.7	152.4	177.8	203.2	330.2	355.6	381.0

STD. 90° & 45°

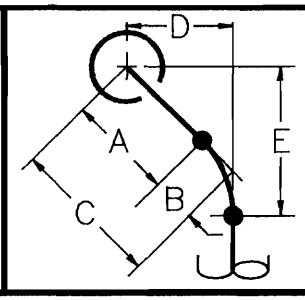

	50.8	63.5	76.2	101.6	152.4	203.2	254	304.8	355.6	406.4	457.2
A	76.2	95.2	114.3	152.4	228.6	304.8	381.0	457.2	533.4	609.6	685.4
B	34.9	44.5	50.8	63.5	95.3	127.0	158.8	190.5	222.3	254.0	285.8
C	111.1	139.7	165.1	215.9	323.9	431.8	539.8	647.7	755.7	863.6	971.6
D	79.4	98.4	117.5	152.4	228.6	304.8	304.8	457.2	535.0	611.2	687.4
E	114.3	142.9	168.3	215.9	323.9	431.8	539.8	647.7	757.2	865.2	973.1

FITTING MAKE UP											
90°&WN FLG	146.1	171.5	193.7	238.1	0000	415.9	498.5	587.4	676.3	755.7	844.6
TEE&WN FLG	139.7	152.4	165.1	190.5	238.1	288.9	333.4	384.2	422.3	450.9	501.7
45°&WN FLG	104.8	120.7	142.9	149.2	193.7	238.1	276.2	320.7	365.1	400.1	444.5

RFWN FLANGES

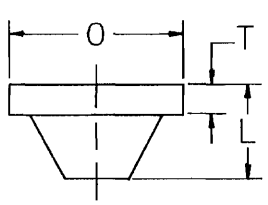

	50.8	63.5	76.2	101.6	152.4	203.2	254	304.8	355.6	406.4	457.2
O	165.1	190.5	209.6	254	317.5	381	444.5	520.7	584.2	647.7	711.2
L	69.9	76.2	79,4	85.7	98.4	111.1	117.5	130.2	142.9	146.1	158.1
T	22.2	25.4	28.6	31.8	36.5	41.3	47.6	50.8	54	57.2	60.3

1.6 (mm) RAISED FACE INCLUDED ON 'L' & 'T' DIMENSIONS

RTJ FLANGES

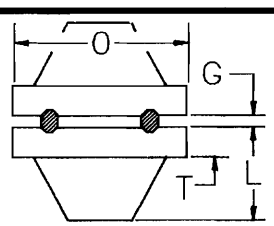

	50.8	63.5	76.2	101.6	152.4	203.2	254	304.8	355.6	406.4	457.2
O	165.1	190.5	209.6	254	317.5	381	444.5	520.7	584.2	647.7	711.2
L	77.8	84.1	87.3	93.7	106.4	119.1	125.4	138.1	150.8	154	166.7
T	28.6	31.8	34.9	38.1	42.9	47.6	54	57.2	60.3	63.5	66.7
G	6.4	6.4	6.4	6.4	6.4	6.4	6.4	6.4	6.4	6.4	6.4

NOTE: ALL DIMENSIONS ARE IN MILLIMETERS 300#

VALVES 300#

NOMINAL PIPE SIZES (mm)			50.8	76.2	101.6	152.4	203.2	254	304.8	355.6	406.4	457.2
O.D. of PIPE			60.3	88.9	114.3	168.3	219.1	273.1	323.9	355.6	406.4	457.2
VALVES	GATE	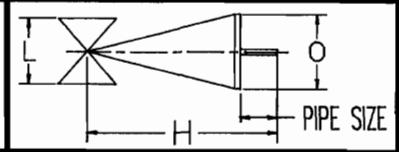	L	0000	0000	0000	0000	0000	0000	0000	0000	0000	0000
			H	469.9	590.6	717.6	968.4	1193.8	1435.1	1632	1898.7	2035.2	2311.4
			O	203.2	228.6	254	355.6	406.4	508	508	685.8	685.8	762
	GLOBE	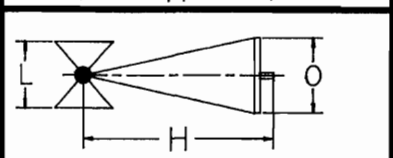	L	0000	0000	0000	0000	0000	*	*	*	*	*
			H	450.9	520.7	628.7	755.7	927.1	*	*	*	*	*
			O	228.6	254	355.6	457	609.6	*	*	*	*	*
	CONTROL	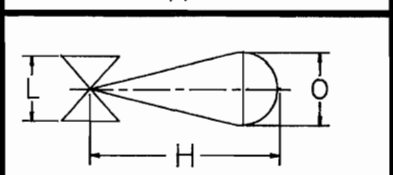	L	0000	0000	0000	0000	0000	0000	*	*	*	*
			H	708	722.3	747.7	965.2	997	1174.8	*	*	*	*
			O	333.4	333.4	333.4	406.4	406.4	536.6	*	*	*	*
	CHECK	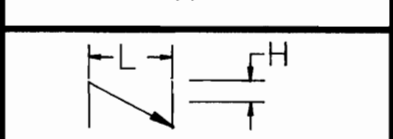	L	0000	0000	0000	0000	0000	0000	0000	*	*	*
			H	171.5	215.9	247.7	298.5	355.6	381	425.5	*	*	*

NOTE: ALL DIMENSIONS ARE IN MILLIMETERS
* REFER to VENDOR CATALOG

300# RF

VALVES	GATE	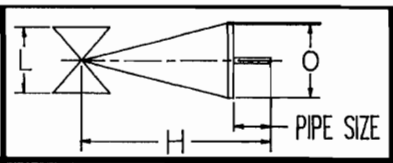	L	231.8	298.5	320.7	419.1	435	473.1	517.5	777.9	854.1	930.3
			H	469.9	590.6	717.6	968.4	1193.8	1435.1	1632	1898.7	2035.2	2311.4
			O	203.2	228.6	254	355.6	406.4	508	508	685.8	685.8	762
	GLOBE	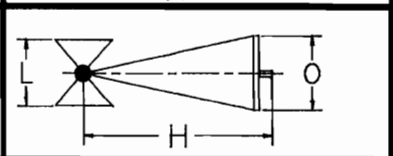	L	282.6	333.4	371.5	460.4	574.7	*	*	*	*	*
			H	450.9	520.7	628.7	755.7	927.1	*	*	*	*	*
			O	228.6	254	355.6	457	609.6	*	*	*	*	*
	CONTROL	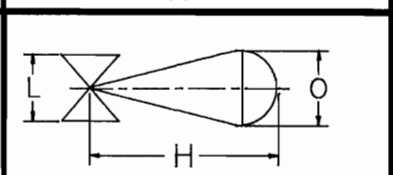	L	282.6	333.4	384.2	489	584.2	723.9	*	*	*	*
			H	708	722.3	747.7	965.2	997	1174.8	*	*	*	*
			O	333.4	333.4	333.4	406.4	406.4	536.6	*	*	*	*
	CHECK	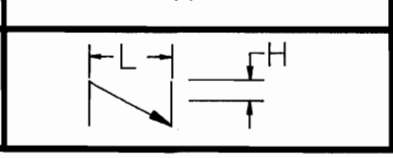	L	282.6	333.4	371.5	460.4	549.3	638.2	727.1	*	*	*
			H	171.5	215.9	247.7	298.5	355.6	381	425.5	*	*	*

NOTE: ALL DIMENSIONS ARE IN MILLIMETERS
* REFER to VENDOR CATALOG

300# RTJ

WELDED FITTINGS-FLANGES 600# RFWN

	NOM. PIPE SIZE (mm)		50.8	63.5	76.2	101.6	152.4	203.2	254	304.8	355.6	406.4	457.2
WELD FITTINGS	O.D. Of PIPE		60.3	73.0	88.9	114.3	152.4	203.2	254	304.8	355.6	406.4	457.2
	90°L.R. ELL	A	76.2	95.3	114.3	152.4	228.6	304.8	381.0	457.2	533.4	609.6	685.8
	45°L.R. ELL	B	34.9	44.5	50.8	63.5	95.3	127.0	158.8	190.5	222.3	254.0	285.8
	HALF TEE	C	63.5	76.2	85.7	104.8	142.9	177.8	215.9	254	279.4	304.8	342.9
	REDUCER	H	76.2	88.9	88.9	101.6	139.7	152.4	177.8	203.2	330.2	355.6	381.0

STD. 90° & 45°												
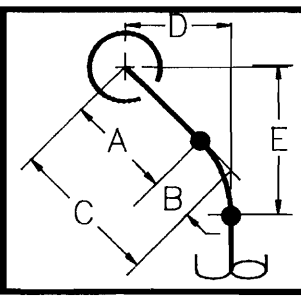	A	76.2	95.2	114.3	152.4	228.6	304.8	381.0	457.2	533.4	609.6	685.4
	B	34.9	44.5	50.8	63.5	95.3	127.0	158.8	190.5	222.3	254.0	285.8
	C	111.1	139.7	165.1	215.9	323.9	431.8	539.8	647.7	755.7	863.6	971.6
	D	79.4	98.4	117.5	152.4	228.6	304.8	304.8	457.2	535.0	611.2	687.4
	E	114.3	142.9	168.3	215.9	323.9	431.8	539.8	647.7	757.2	865.2	973.1

FITTING MAKE UP												
90°&WN FLG	155.6	181.0	203.2	260.4	352.4	444.5	539.8	619.1	704.9	793.8	876.3
TEE&WN FLG	142.9	168.3	174.6	212.7	266.7	317.5	374.7	415.9	450.9	489	571.5
45°&WN FLG	114.3	130.2	139.7	171.5	219.1	266.7	317.5	352.4	393.7	438.2	476.3

RFWN FLANGES												
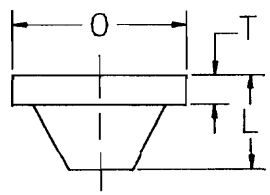	O	165.1	190.5	209.6	273.1	355.6	419.1	508	558.8	603.3	685.8	743
	L	79.4	85.7	88.9	108	123.8	139.7	158.8	161.9	174.6	184.2	190.5
	T	31.8	34.9	38.1	44.5	54	61.9	69.9	73	76.2	82.6	88.9
	6.4 (mm) RAISED FACE INCLUDED ON 'L' & 'T' DIMENSIONS											

RTJ FLANGES												
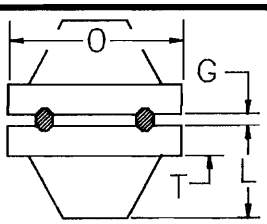	O	165.1	190.5	209.6	273.1	355.6	419.1	508	558.8	603.3	685.8	743
	L	81	87.3	90.5	109.5	125.4	141.3	160.3	163.5	173	185.7	192.1
	T	38.1	41.3	44.5	50.8	60.3	68.3	76.2	79.4	82.6	88.9	95.3
	G	4.8	4.8	4.8	4.8	4.8	4.8	4.8	4.8	4.8	4.8	4.8

NOTE: ALL DIMENSIONS ARE IN MILLIMETERS 600#

VALVES 600#

NOMINAL PIPE SIZES (mm)			50.8	76.2	101.6	152.4	203.2	254	304.8	355.6	406.4	457.2
O.D. of PIPE			60.3	88.9	114.3	168.3	219.1	273.1	323.9	355.6	406.4	457.2
VALVES	GATE	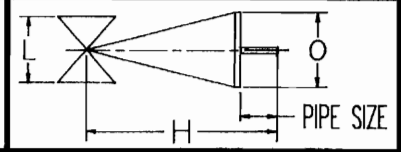	L	292.1	355.6	431.8	558.8	660.4	787.4	838.2	889	990	1092.2
			H	463.6	654.1	812.8	1085.9	1327.2	1581.2	1778	1962.2	2127.3	2381.3
			O	203.2	254	355.6	508	609.6	685.8	685.8	762	762	914.4
	GLOBE	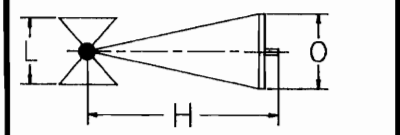	L	292.1	355.6	431.8	558.8	*	*	*	*	*	*
			H	482.6	596.9	698.5	889	*	*	*	*	*	*
			O	254	304.8	457.2	609.6	*	*	*	*	*	*
	CONTROL	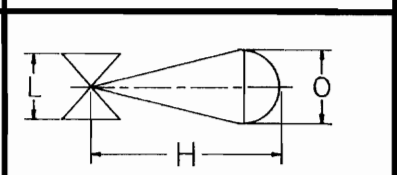	L	285.8	336.6	393.7	508	609.6	752.5	*	*	*	*
			H	708	722.3	747.7	965.2	997	1174.8	*	*	*	*
			O	333.4	333.4	333.4	406.4	406.4	536.6	*	*	*	*
	CHECK	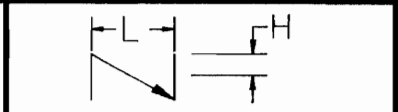	L	292.1	355.6	431.8	558.8	660.4	787.4	863.6	*	*	*
			H	177.8	228.6	260.4	342.9	387.4	476.3	546.1	*	*	*

NOTE: ALL DIMENSIONS ARE IN MILLIMETERS
* REFER to VENDOR CATALOG

600# RF

VALVES	GATE	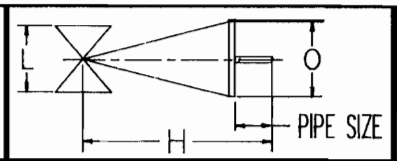	L	295.3	358.8	435	562	663.6	790.6	841.4	892.2	993.8	1095.4
			H	463.6	654.1	812.8	1085.9	1327.2	1581.2	1778	1962.2	2127.3	2381.3
			O	203.2	254	355.6	508	609.6	685.8	685.8	762	762	914.4
	GLOBE	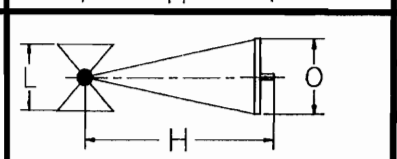	L	295.3	358	435	562	*	*	*	*	*	*
			H	482.6	596.9	698.5	889	*	*	*	*	*	*
			O	254	304.8	457.2	609.6	*	*	*	*	*	*
	CONTROL	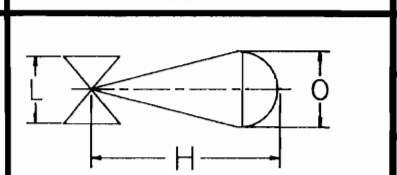	L	288.9	339.7	396.9	511.2	612.8	755.7	*	*	*	*
			H	708	722.3	747.7	965.2	997	1174.8	*	*	*	*
			O	333.4	333.4	333.4	406.4	406.4	536.6	*	*	*	*
	CHECK	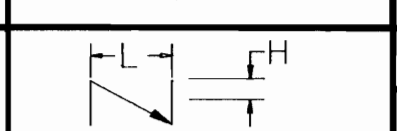	L	295.3	358	435	562	663.6	790.6	841.4	*	*	*
			H	177.8	228.6	260.4	342.9	387.4	476.3	546.1	*	*	*

NOTE: ALL DIMENSIONS ARE IN MILLIMETERS
* REFER to VENDOR CATALOG

600# RTJ

SCREWED FITTINGS

NOMINAL PIPE SIZES (mm)		12.7	19.1	25.4	31.8	38.1	50.8	63.5	76.2
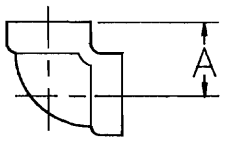	3000 # 90° ELL A	33.3	38.1	44.5	50.8	60.3	63.5	85.7	95.3
	6000 # 90° ELL A	38.1	44.5	50.8	60.3	63.5	85.7	95.3	106.4
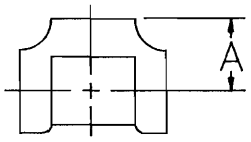	3000 # TEE A	33.3	38.1	44.5	50.8	60.3	63.5	85.7	95.3
	6000 # TEE A	38.1	44.5	50.8	60.3	63.5	85.7	95.3	106.4
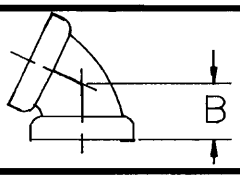	3000 # 45° ELL B	25.4	28.6	33.3	36.5	42.9	50.8	52.4	63.5
	6000 # 45° ELL B	28.6	33.3	34.9	42.9	44.5	52.4	63.5	79.4
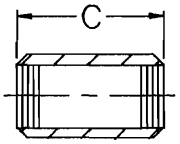	3000 # COUPLING C	47.6	50.8	60.3	66.7	79.4	85.7	92.1	108
	6000 # COUPLING C	47.6	50.8	60.3	66.7	79.4	85.7	92.1	108
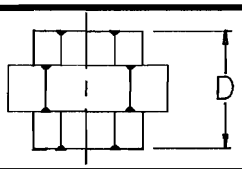	3000 # UNION D	54	58.7	63.5	71.4	79.4	88.9	100	114.3
	6000 # UNION D	73	85.7	92.1	98.4	106.4	117.5	131.8	150.8
NORMAL THREAD ENGAGEMENT	3000 #	12.7	14.3	17.5	17.5	17.5	19.1	23.8	25.4
	6000 #	12.7	14.3	17.5	17.5	17.5	19.1	23.8	25.4
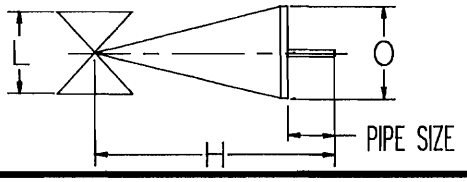	GATE L	90.5	114.3	120.7	127	139.7	177.8	*	*
	GATE H	165.1	209.6	242.9	276.2	290.5	357.2	*	*
	GATE O	101.6	139.7	146.1	165.1	177.8	203.2	*	*
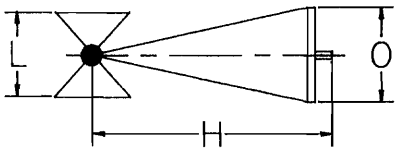	GLOBE L	92.1	117.5	158.8	177.8	196.9	228.6	*	*
	GLOBE H	174.6	214.3	263.5	292.1	309.6	368.3	*	*
	GLOBE O	101.6	120.7	146.1	203.2	203.2	203.2	*	*
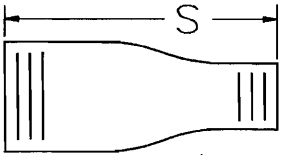	SWAGE OUTLET	6.4 TO 9.5	6.4 TO 12.7	6.4 TO 19.1	6.4 TO 25.4	6.4 TO 31.8	6.4 TO 38.1	6.4 TO 57.2	6.4 TO 63.5
	SWAGE S	95.3	76.2	88.9	101.6	114.3	165.1	177.8	203.2

SOCKET WELD FITTINGS

NOMINAL PIPE SIZES (mm)			12.7	19.1	25.4	31.8	38.1	50.8	63.5	76.2
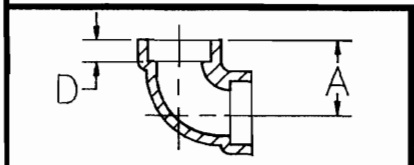	3000 # 90°ELL	A	28.6	33.3	38.1	44.5	50.8	60.3	76.2	85.7
	6000 #	A	33.3	38.1	44.5	50.8	60.3	63.5	82.6	95.3
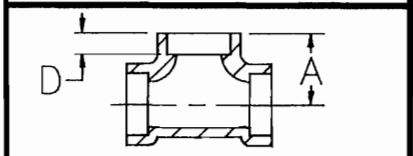	3000 # TEE	A	28.6	33.3	38.1	44.5	50.8	60.3	76.2	85.7
	6000 #	A	33.3	38.1	44.5	50.8	60.3	63.5	82.6	95.3
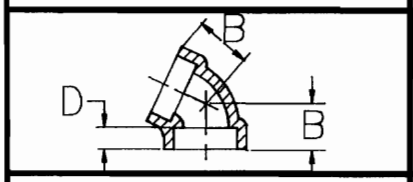	3000 # 45°ELL	B	22.2	25.4	28.6	33.3	36.5	42.9	52.4	63.5
	6000 #	B	25.4	28.6	33.3	34.9	42.9	44.5	52.4	63.5
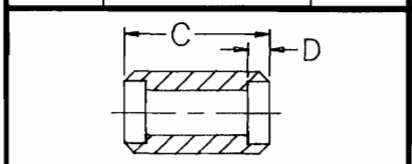	3000 # COUPLING	C	34.9	38.1	44.5	47.6	50.8	63.5	63.5	69.9
	6000 #	C	34.9	38.1	44.5	47.6'	50.8	63.5	63.5	69.9
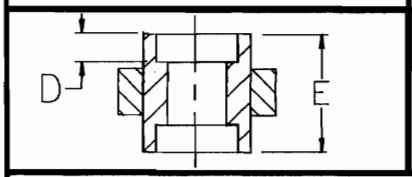	3000 # UNION	E	54	58.7	63.5	71.4	79.4	88.9	100	114.3
	6000 #	E	73	85.7	92.1	98.4	106.4	117.5	131.8	150.8
SOCKET DEPTH	3000 #	D	12.7	14.3	15.9	17.5	19.1	22.2	28.6	34.9
	6000 #	D	17.5	19.1	22.2	23.8	25.4	28.6	38.1	41.3
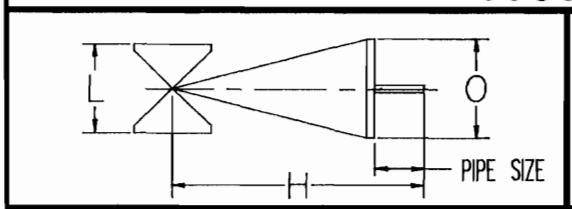	GATE	L	90.5	114.3	120.7	127	139.7	177.8	*	*
		H	165.1	209.6	242.9	276.2	290.5	357.2	*	*
		O	101.6	139.7	146.1	165.1	177.8	203.2	*	*
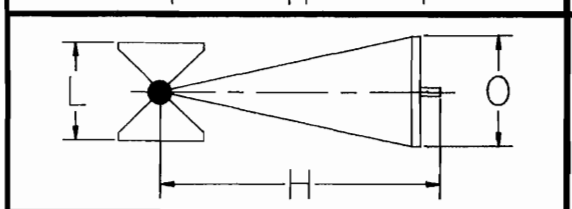	GLOBE	L	92.1	117.5	158.8	177.8	196.9	228.6	*	*
		H	174.6	214.3	263.5	292.1	309.6	368.3	*	*
		O	101.6	120.7	146.1	203.2	203.2	203.2	*	*
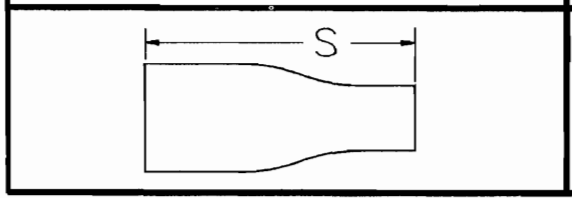	SWAGE	OUTLET	6.4 TO 9.5	6.4 TO 12.7	6.4 TO 19.1	6.4 TO 25.4	6.4 TO 31.8	6.4 TO 38.1	6.4 TO 57.2	6.4 TO 63.5
		S	95.3	76.2	88.9	101.6	114.3	165.1	177.8	203.2

Commercial Wrought Steel Pipe Data

Nominal Pipe Size Inches	Outside Diameter (D) Inches	Schedule No. *See Note 1*	Wall Thickness (t) Inches	Inside Diameter (d) Inches	Area of Metal (a) Square Inches	Transverse Internal Area: Square Inches	Transverse Internal Area: *See Note 2* Square Feet	Moment of Inertia (I) Inches to 4th Power	Weight of Pipe Pounds per foot	Weight of Water Pounds per foot of pipe	External Surface Sq. Ft. per foot of pipe	Section Modulus $\left(\frac{I}{D}\right)$
1/8	0.405	40s	.068	.269	.0720	.0568	.00040	.00106	.244	.025	.106	.00523
		80x	.095	.215	.0925	.0364	.00025	.00122	.314	.016	.106	.00602
1/4	0.540	40s	.088	.364	.1250	.1041	.00072	.00331	.424	.045	.141	.01227
		80x	.119	.302	.1574	.0716	.00050	.00377	.535	.031	.141	.01395
3/8	0.675	40s	.091	.493	.1670	.1910	.00133	.00729	.567	.083	.178	.02160
		80x	.126	.423	.2173	.1405	.00098	.00862	.738	.061	.178	.02554
1/2	0.840	40s	.109	.622	.2503	.3040	.00211	.01709	.850	.132	.220	.04069
		80x	.147	.546	.3200	.2340	.00163	.02008	1.087	.102	.220	.04780
		160	.187	.466	.3836	.1706	.00118	.02212	1.300	.074	.220	.05267
		...xx	.294	.252	.5043	.050	.00035	.02424	1.714	.022	.220	.05772
3/4	1.050	40s	.113	.824	.3326	.5330	.00371	.03704	1.130	.231	.275	.07055
		80x	.154	.742	.4335	.4330	.00300	.04479	1.473	.188	.275	.08531
		160	.218	.614	.5698	.2961	.00206	.05269	1.940	.128	.275	.10036
		...xx	.308	.434	.7180	.148	.00103	.05792	2.440	.064	.275	.11032
1	1.315	40s	.133	1.049	.4939	.8640	.00600	.08734	1.678	.375	.344	.1328
		80x	.179	.957	.6388	.7190	.00499	.1056	2.171	.312	.344	.1606
		160	.250	.815	.8365	.5217	.00362	.1251	2.840	.230	.344	.1903
		...xx	.358	.599	1.0760	.282	.00196	.1405	3.659	.122	.344	.2136
1 1/4	1.660	40s	.140	1.380	.6685	1.495	.01040	.1947	2.272	.649	.435	.2346
		80x	.191	1.278	.8815	1.283	.00891	.2418	2.996	.555	.435	.2913
		160	.250	1.160	1.1070	1.057	.00734	.2839	3.764	.458	.435	.3421
		...xx	.382	.896	1.534	.630	.00438	.3411	5.214	.273	.435	.4110
1 1/2	1.900	40s	.145	1.610	.7995	2.036	.01414	.3099	2.717	.882	.497	.3262
		80x	.200	1.500	1.068	1.767	.01225	.3912	3.631	.765	.497	.4118
		160	.281	1.338	1.429	1.406	.00976	.4824	4.862	.608	.497	.5078
		...xx	.400	1.100	1.885	.950	.00660	.5678	6.408	.42	.497	.5977
2	2.375	40s	.154	2.067	1.075	3.355	.02330	.6657	3.652	1.45	.622	.5606
		80x	.218	1.939	1.477	2.953	.02050	.8679	5.022	1.28	.622	.7309
		160	.343	1.689	2.190	2.241	.01556	1.162	7.440	.97	.622	.979
		...xx	.436	1.503	2.656	1.774	.01232	1.311	9.029	.77	.622	1.104
2 1/2	2.875	40s	.203	2.469	1.704	4.788	.03322	1.530	5.79	2.07	.753	1.064
		80x	.276	2.323	2.254	4.238	.02942	1.924	7.66	1.87	.753	1.339
		160	.375	2.125	2.945	3.546	.02463	2.353	10.01	1.54	.753	1.638
		...xx	.552	1.771	4.028	2.464	.01710	2.871	13.70	1.07	.753	1.997
3	3.500	40s	.216	3.068	2.228	7.393	.05130	3.017	7.58	3.20	.916	1.724
		80x	.300	2.900	3.016	6.605	.04587	3.894	10.25	2.86	.916	2.225
		160	.438	2.624	4.205	5.408	.03755	5.032	14.32	2.35	.916	2.876
		...xx	.600	2.300	5.466	4.155	.02885	5.993	18.58	1.80	.916	3.424
3 1/2	4.000	40s	.226	3.548	2.680	9.886	.06870	4.788	9.11	4.29	1.047	2.394
		80x	.318	3.364	3.678	8.888	.06170	6.280	12.51	3.84	1.047	3.140
4	4.500	40s	.237	4.026	3.174	12.73	.08840	7.233	10.79	5.50	1.178	3.214
		80x	.337	3.826	4.407	11.50	.07986	9.610	14.98	4.98	1.178	4.271
		120	.438	3.624	5.595	10.31	.0716	11.65	19.00	4.47	1.178	5.178
		160	.531	3.438	6.621	9.28	.0645	13.27	22.51	4.02	1.178	5.898
		...xx	.674	3.152	8.101	7.80	.0542	15.28	27.54	3.38	1.178	6.791
5	5.563	40s	.258	5.047	4.300	20.01	.1390	15.16	14.62	8.67	1.456	5.451
		80x	.375	4.813	6.112	18.19	.1263	20.67	20.78	7.88	1.456	7.431
		120	.500	4.563	7.953	16.35	.1136	25.73	27.10	7.09	1.456	9.250
		160	.625	4.313	9.696	14.61	.1015	30.03	32.96	6.33	1.456	10.796
		...xx	.750	4.063	11.340	12.97	.0901	33.63	38.55	5.61	1.456	12.090
6	6.625	40s	.280	6.065	5.581	28.89	.2006	28.14	18.97	12.51	1.734	8.50
		80x	.432	5.761	8.405	26.07	.1810	40.49	28.57	11.29	1.734	12.22
		120	.562	5.501	10.70	23.77	.1650	49.61	36.40	10.30	1.734	14.98
		160	.718	5.189	13.32	21.15	.1469	58.97	45.30	9.16	1.734	17.81
		...xx	.864	4.897	15.64	18.84	.1308	66.33	53.16	8.16	1.734	20.02
8	8.625	20	.250	8.125	6.57	51.85	.3601	57.72	22.36	22.47	2.258	13.39
		30	.277	8.071	7.26	51.16	.3553	63.35	24.70	22.17	2.258	14.69
		40s	.322	7.981	8.40	50.03	.3474	72.49	28.55	21.70	2.258	16.81
		60	.406	7.813	10.48	47.94	.3329	88.73	35.64	20.77	2.258	20.58
		80x	.500	7.625	12.76	45.66	.3171	105.7	43.39	19.78	2.258	24.51
		100	.593	7.439	14.96	43.46	.3018	121.3	50.87	18.83	2.258	28.14
		120	.718	7.189	17.84	40.59	.2819	140.5	60.63	17.59	2.258	32.58
		140	.812	7.001	19.93	38.50	.2673	153.7	67.76	16.68	2.258	35.65
		...xx	.875	6.875	21.30	37.12	.2578	162.0	72.42	16.10	2.258	37.56
		160	.906	6.813	21.97	36.46	.2532	165.9	74.69	15.80	2.258	38.48

Note 1: The letters s, x, and xx in the column of Schedule Numbers indicate Standard, Extra Strong, and Double Extra Strong Pipe, respectively.

Note 2: The values shown in square feet for the Transverse Internal Area also represent the volume in cubic feet per foot of pipe length.

Courtesy of Crane Co.

Nominal Pipe Size Inches	Outside Diameter (D) Inches	Schedule No. *See Note 1*	Wall Thickness (t) Inches	Inside Diameter (d) Inches	Area of Metal (a) Square Inches	Transverse Internal Area Square Inches	Transverse Internal Area *See Note 2* Square Feet	Moment of Inertia (I) Inches to 4th Power	Weight of Pipe Pounds per foot	Weight of Water Pounds per foot of pipe	External Surface Sq. Ft. per foot of pipe	Section Modulus $\left(2\frac{I}{D}\right)$
10	10.750	20	.250	10.250	8.24	82.52	.5731	113.7	28.04	35.76	2.814	21.15
		30	.307	10.136	10.07	80.69	.5603	137.4	34.24	34.96	2.814	25.57
		40s	.365	10.020	11.90	78.86	.5475	160.7	40.48	34.20	2.814	29.90
		60x	.500	9.750	16.10	74.66	.5185	212.0	54.74	32.35	2.814	39.43
		80	.593	9.564	18.92	71.84	.4989	244.8	64.33	31.13	2.814	45.54
		100	.718	9.314	22.63	68.13	.4732	286.1	76.93	29.53	2.814	53.22
		120	.843	9.064	26.24	64.53	.4481	324.2	89.20	27.96	2.814	60.32
		140	1.000	8.750	30.63	60.13	.4176	367.8	104.13	26.06	2.814	68.43
		160	1.125	8.500	34.02	56.75	.3941	399.3	115.65	24.59	2.814	74.29
12	12.75	20	.250	12.250	9.82	117.86	.8185	191.8	33.38	51.07	3.338	30.2
		30	.330	12.090	12.87	114.80	.7972	248.4	43.77	49.74	3.338	39.0
		..s	.375	12.000	14.58	113.10	.7854	279.3	49.56	49.00	3.338	43.8
		40	.406	11.938	15.77	111.93	.7773	300.3	53.53	48.50	3.338	47.1
		..x	.500	11.750	19.24	108.43	.7528	361.5	65.42	46.92	3.338	56.7
		60	.562	11.626	21.52	106.16	.7372	400.4	73.16	46.00	3.338	62.8
		80	.687	11.376	26.03	101.64	.7058	475.1	88.51	44.04	3.338	74.6
		100	.843	11.064	31.53	96.14	.6677	561.6	107.20	41.66	3.338	88.1
		120	1.000	10.750	36.91	90.76	.6303	641.6	125.49	39.33	3.338	100.7
		140	1.125	10.500	41.08	86.59	.6013	700.5	133.68	37.52	3.338	109.9
		160	1.312	10.126	47.14	80.53	.5592	781.1	160.27	34.89	3.338	122.6
14	14.00	10	.250	13.500	10.80	143.14	.9940	255.3	36.71	62.03	3.665	36.6
		20	.312	13.376	13.42	140.52	.9758	314.4	45.68	60.89	3.665	45.0
		30s	.375	13.250	16.05	137.88	.9575	372.8	54.57	59.75	3.665	53.2
		40	.438	13.124	18.66	135.28	.9394	429.1	63.37	58.64	3.665	61.3
		..x	.500	13.000	21.21	132.73	.9217	483.8	72.09	57.46	3.665	69.1
		60	.593	12.814	24.98	128.96	.8956	562.3	84.91	55.86	3.665	80.3
		80	.750	12.500	31.22	122.72	.8522	687.3	106.13	53.18	3.665	98.2
		100	.937	12.126	38.45	115.49	.8020	824.4	130.73	50.04	3.665	117.8
		120	1.093	11.814	44.32	109.62	.7612	929.6	150.67	47.45	3.665	132.8
		140	1.250	11.500	50.07	103.87	.7213	1027.0	170.22	45.01	3.665	146.8
		160	1.406	11.188	55.63	98.31	.6827	1117.0	189.12	42.60	3.665	159.6
16	16.00	10	.250	15.500	12.37	188.69	1.3103	383.7	42.05	81.74	4.189	48.0
		20	.312	15.376	15.38	185.69	1.2895	473.2	52.36	80.50	4.189	59.2
		30s	.375	15.250	18.41	182.65	1.2684	562.1	62.58	79.12	4.189	70.3
		40x	.500	15.000	24.35	176.72	1.2272	731.9	82.77	76.58	4.189	91.5
		60	.656	14.688	31.62	169.44	1.1766	932.4	107.50	73.42	4.189	116.6
		80	.843	14.314	40.14	160.92	1.1175	1155.8	136.46	69.73	4.189	144.5
		100	1.031	13.938	48.48	152.58	1.0596	1364.5	164.83	66.12	4.189	170.5
		120	1.218	13.564	56.56	144.50	1.0035	1555.8	192.29	62.62	4.189	194.5
		140	1.438	13.124	65.78	135.28	.9394	1760.3	223.64	58.64	4.189	220.0
		160	1.593	12.814	72.10	128.96	.8956	1893.5	245.11	55.83	4.189	236.7
18	18.00	10	.250	17.500	13.94	240.53	1.6703	549.1	47.39	104.21	4.712	61.1
		20	.312	17.376	17.34	237.13	1.6467	678.2	59.03	102.77	4.712	75.5
		..s	.375	17.250	20.76	233.71	1.6230	806.7	70.59	101.18	4.712	89.6
		30	.438	17.124	24.17	230.30	1.5990	930.3	82.06	99.84	4.712	103.4
		..x	.500	17.000	27.49	226.98	1.5763	1053.2	92.45	98.27	4.712	117.0
		40	.562	16.876	30.79	223.68	1.5533	1171.5	104.75	96.93	4.712	130.1
		60	.750	16.500	40.64	213.83	1.4849	1514.7	138.17	92.57	4.712	168.3
		80	.937	16.126	50.23	204.24	1.4183	1833.0	170.75	88.50	4.712	203.8
		100	1.156	15.688	61.17	193.30	1.3423	2180.0	207.96	83.76	4.712	242.3
		120	1.375	15.250	71.81	182.66	1.2684	2498.1	244.14	79.07	4.712	277.6
		140	1.562	14.876	80.66	173.80	1.2070	2749.0	274.23	75.32	4.712	305.5
		160	1.781	14.438	90.75	163.72	1.1369	3020.0	308.51	70.88	4.712	335.6
20	20.00	10	.250	19.500	15.51	298.65	2.0740	756.4	52.73	129.42	5.236	75.6
		20s	.375	19.250	23.12	290.04	2.0142	1113.0	78.60	125.67	5.236	111.3
		30x	.500	19.000	30.63	283.53	1.9690	1457.0	104.13	122.87	5.236	145.7
		40	.593	18.814	36.15	278.00	1.9305	1703.0	122.91	120.46	5.236	170.4
		60	.812	18.376	48.95	265.21	1.8417	2257.0	166.40	114.92	5.236	225.7
		80	1.031	17.938	61.44	252.72	1.7550	2772.0	208.87	109.51	5.236	277.1
		100	1.281	17.438	75.33	238.83	1.6585	3315.2	256.10	103.39	5.236	331.5
		120	1.500	17.000	87.18	226.98	1.5762	3754.0	296.37	98.35	5.236	375.5
		140	1.750	16.500	100.33	213.82	1.4849	4216.0	341.10	92.66	5.236	421.7
		160	1.968	16.064	111.49	202.67	1.4074	4585.5	379.01	87.74	5.236	458.5
24	24.00	10	.250	23.500	18.65	433.74	3.0121	1315.4	63.41	187.95	6.283	109.6
		20s	.375	23.250	27.83	424.56	2.9483	1942.0	94.62	183.95	6.283	161.9
		..x	.500	23.000	36.91	415.48	2.8853	2549.5	125.49	179.87	6.283	212.5
		30	.562	22.876	41.39	411.00	2.8542	2843.0	140.80	178.09	6.283	237.0
		40	.687	22.626	50.31	402.07	2.7921	3421.3	171.17	174.23	6.283	285.1
		60	.968	22.064	70.04	382.35	2.6552	4652.8	238.11	165.52	6.283	387.7
		80	1.218	21.564	87.17	365.22	2.5362	5672.0	296.36	158.26	6.283	472.8
		100	1.531	20.938	108.07	344.32	2.3911	6849.9	367.40	149.06	6.283	570.8
		120	1.812	20.376	126.31	326.08	2.2645	7825.0	429.39	141.17	6.283	652.1
		140	2.062	19.876	142.11	310.28	2.1547	8625.0	483.13	134.45	6.283	718.9
		160	2.343	19.314	159.41	292.98	2.0346	9455.9	541.94	126.84	6.283	787.9

Courtesy of Crane Co.

DIMENSIONS

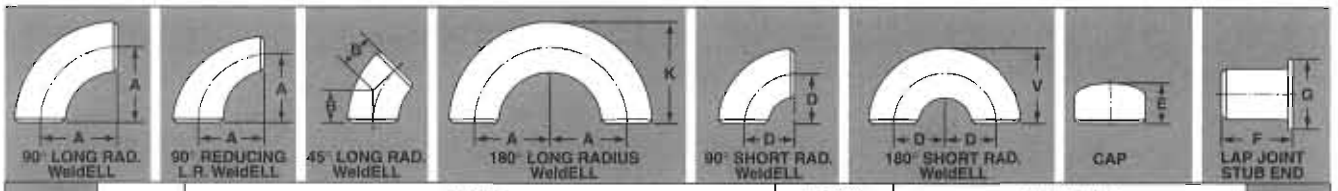

Nom. Pipe Size	Pipe O.D.	WeldELL A	WeldELL B	WeldELL D	WeldELL K	WeldELL V	CAPS* E	STUB ENDS F ANSI Std.	STUB ENDS G O.D. of Lap	STUB ENDS Corner Radius	Nom. Pipe Size
½	.840	1½	⅝	–	1⅞	–	1	3	1⅜	⅛	½
¾	1.050	1⅝	7/16	–	1 11/16	–	1	3	1 11/16	⅛	¾
1	1.315	1½	⅞	1	2 3/16	1⅝	1½	4	2	⅛	1
1¼	1.660	1⅞	1	1¼	2¾	2 1/16	1½	4	2½	3/16	1¼
1½	1.900	2¼	1⅛	1½	3¼	2 7/16	1½	4	2⅞	¼	1½
2	2.375	3	1⅜	2	4 3/16	3 3/16	1½	6	3⅝	5/16	2
2½	2.875	3¾	1¾	2½	5 3/16	3 15/16	1½	6	4⅛	5/16	2½
3	3.500	4½	2	3	6¼	4¾	2	6	5	⅜	3
3½	4.000	5¼	2¼	3½	7¼	5½	2½	6	5½	⅜	3½
4	4.500	6	2½	4	8¼	6¼	2½	6	6 3/16	7/16	4
5	5.563	7½	3⅛	5	10 5/16	7¾	3	8	7 3/16	7/16	5
6	6.625	9	3¾	6	12 5/16	9 9/16	3½	8	8½	½	6
8	8.625	12	5	8	16 3/16	12 9/16	4	8	10⅝	½	8
10	10.750	15	6¼	10	20⅜	15⅝	5	10	12¾	½	10
12	12.750	18	7⅛	12	24⅜	18⅜	6	10	15	½	12
14	14.000	21	8¾	14	28	21	6½	12	16¼	½	14
16	16.000	24	10	16	32	24	7	12	18½	½	16
18	18.000	27	11¼	18	36	27	8	12	21	½	18
20	20.000	30	12½	20	40	30	9	12	23	½	20
24	24.000	36	15	24	48	26	10½	12	27½	½	24
30	30.000	45	18½	30	60	45	10½	–	–	–	30
36	36.000	54	22¼	36	–	–	12	–	–	–	36
42	42.000	63	26	42	–	–	12	–	–	–	42
48	48.000	72	29⅞	48	–	–	13½	–	–	–	48

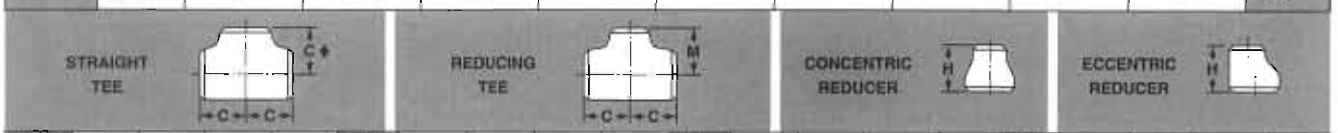

Nom. Pipe Size	Outlet	C	M	H
¾	¾	1⅛	...	...
	½	1⅛	1⅛	1½
1	1	1½	...	...
	¾	1½	1½	2
	½	1½	1½	2
1¼	1¼	1⅞	...	...
	1	1⅞	1⅞	2
	¾	1⅞	1⅞	2
	½	1⅞	1⅞	2
1½	1½	2¼	...	...
	1¼	2¼	2¼	2½
	1	2¼	2¼	2½
	¾	2¼	2¼	2½
	½	2¼	2¼	2½
2	2	2½	...	...
	1½	2½	2⅜	3
	1¼	2½	2¼	3
	1	2½	2	3
	¾	2½	1¾	3
2½	2½	3	...	...
	2	3	2¾	3½
	1½	3	2⅝	3½
	1¼	3	2½	3½
	1	3	2¼	3½
3	3	3⅜	...	...
	2½	3⅜	3¼	3½
	2	3⅜	3	3½
	1½	3⅜	2⅞	3½
	1¼	3⅜	2¾	3½

Nom. Pipe Size	Outlet	C	M	H
3½	3½	3¾	...	...
	3	3¾	3⅝	4
	2½	3¾	3½	4
	2	3¾	3¼	4
	1½	3¾	3⅛	4
4	4	4⅛	...	...
	3½	4½	4	4
	3	4½	3⅞	4
	2½	4½	3¾	4
	2	4½	3½	4
	1½	4½	3⅜	4
5	5	4⅞	...	...
	4	4⅞	4⅝	5
	3½	4⅞	4½	5
	3	4⅞	4⅜	5
	2½	4⅞	4¼	5
	2	4⅞	4⅛	5
6	6	5⅝	...	...
	5	5⅝	5⅜	5½
	4	5⅝	5⅛	5½
	3½	5⅝	5	5½
	3	5⅝	4⅞	5½
	2½	5⅝	4¾	5½
8	8	7	...	...
	6	7	6⅝	6
	5	7	6⅜	6
	4	7	6⅛	6
	3½	7	6	6

Nom. Pipe Size	Outlet	C	M	H
10	10	8½	...	...
	8	8½	8	7
	6	8½	7⅝	7
	5	8½	7½	7
	4	8½	7¼	7
12	12	10	...	...
	10	10	9½	8
	8	10	9	8
	6	10	8⅝	8
	5	10	8½	8
14	14	11	...	...
	12	11	10⅝	13
	10	11	10⅛	13
	8	11	9¾	13
	6	11	9⅜	13
16	16	12	...	...
	14	12	12	14
	12	12	11⅝	14
	10	12	11⅛	14
	8	12	10¾	14
	6	12	10⅜	14
18	18	13½	...	...
	18	13½	13	15
	14	13½	13	15
	12	13½	12⅝	15
	10	13½	12⅛	15
	8	13½	11¾	15

Nom. Pipe Size	Outlet	C	M	H
20	20	15	...	...
	18	15	14½	20
	16 & 14	15	14	20
	12	15	13⅝	20
	10	15	13⅛	20
	8	15	12¾	20
24	24	17	...	...
	20	17	17	20
	18	17	18½	20
	16 & 14	17	16	20
	12	17	15⅝	20
	10	17	15⅛	20
30	30	22	...	...
	24	22	21	24
	20	22	20	24
	18	22	19½	24
	16 & 14	22	19	24
36	36	26½	...	...
	30	26½	25	24
	24	26½	24	24
	20	26½	23	24
	18	26½	22½	24
	16	26½	22	24
42	42	30	28	...
	36 & 30	30	28	24
	24 & 20	30	26	24
48	48	35	33	...
	42	35	32	28
	36	35	31	28
	30	35	30	28
	24	35	29	28

♦ See M dimensions for branch height of 42″ or 48″ full branch tee. All dimensions are in inches.
See ANSI B16.9 for cap lengths when wall thicknesses are greater than x-stg.

Courtesy of Taylor Forge

FLANGES DIMENSIONS

WELDING NECK

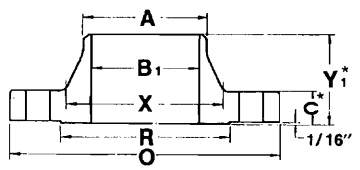

SLIP-ON

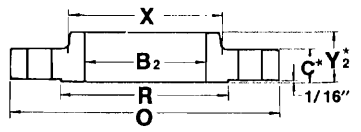

BLIND

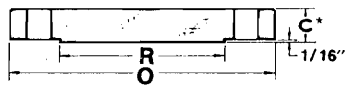

THREADED

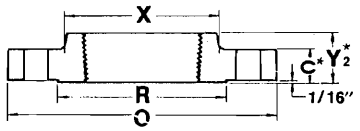

LAP JOINT

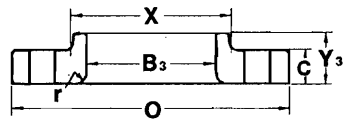

SOCKET-WELD [3]

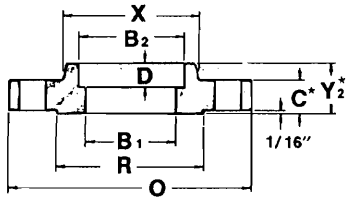

150-LB.

Nom. Pipe Size	Outside Diam. O	Thkn. (min.) C	O.D. of Raised Face R	Hub Diam. X	Length thru Hub: Wldg. Neck Y_1	Length thru Hub: Slip-on Thrd. Sock. W. Y_2	Length thru Hub: Lap Joint Y_3	Bore □: Wldg. Neck [2] B_1	Bore □: Slip-on Sock. W. B_2	Bore □: Lap Joint B_3	Depth of Socket D	Approx. Weight (Lbs.): Wldg. Neck	Approx. Weight (Lbs.): Slip-On Thrd. Sock. W.	Approx. Weight (Lbs.): Lap Joint	Approx. Weight (Lbs.): Blind	Drilling: No. Holes	Drilling: Diam. Holes	Drilling: Bolt Circle Diam.
½	3½	7/16	1⅜	1 3/16	1⅞	⅝	⅝	0.62	0.88	0.90	⅜	2	1	1	1	4	⅝	2⅜
¾	3⅞	½	1 11/16	1½	2 1/16	⅝	⅝	0.82	1.09	1.11	7/16	2	2	2	2	4	⅝	2¾
1	4¼	9/16	2	1 15/16	2 3/16	11/16	11/16	1.05	1.36	1.38	½	3	2	2	2	4	⅝	3⅛
1¼	4⅝	⅝	2½	2 5/16	2¼	13/16	13/16	1.38	1.70	1.72	9/16	3	3	3	3	4	⅝	3½
1½	5	11/16	2⅞	2 9/16	2 7/16	⅞	⅞	1.61	1.95	1.97	⅝	4	3	3	4	4	⅝	3⅞
2	6	¾	3⅝	3 1/16	2½	1	1	2.07	2.44	2.46	11/16	6	5	5	5	4	¾	4¾
2½	7	⅞	4⅛	3 9/16	2¾	1⅛	1⅛	2.47	2.94	2.97	¾	8	7	7	7	4	¾	5½
3	7½	15/16	5	4¼	2¾	1 3/16	1 3/16	3.07	3.57	3.60	13/16	10	8	8	9	4	¾	6
3½	8½	15/16	5½	4 13/16	2 13/16	1¼	1¼	3.55	4.07	4.10	⅞	12	11	11	13	8	¾	7
4	9	15/16	6 3/16	5 5/16	3	1 5/16	1 5/16	4.03	4.57	4.60	15/16	15	13	13	17	8	¾	7½
5	10	15/16	7 5/16	6 7/16	3½	1 7/16	1 7/16	5.05	5.66	5.69	15/16	19	15	15	20	8	⅞	8½
6	11	1	8½	7 9/16	3½	1 9/16	1 9/16	6.07	6.72	6.75	1 1/16	24	19	19	26	8	⅞	9½
8	13½	1⅛	10⅝	9 11/16	4	1¾	1¾	7.98	8.72	8.75	1¼	39	30	30	45	8	⅞	11¾
10	16	1 3/16	12¾	12	4	1 15/16	1 15/16	10.02	10.88	10.92	1 5/16	52	43	43	70	12	1	14¼
12	19	1¼	15	14⅜	4½	2 3/16	2 3/16	12.00	12.88	12.92	1 9/16	80	64	64	110	12	1	17
14	21	1⅜	16¼	15¾	5	2¼	3⅛	13.25	14.14	14.18	1⅝	110	90	105	140	12	1⅛	18¾
16	23½	1 7/16	18½	18	5	2½	3 7/16	15.25	16.16	16.19	1¾	140	98	140	180	16	1⅛	21¼
18	25	1 9/16	21	19⅞	5½	2 11/16	3 13/16	17.25	18.18	18.20	1 15/16	150	130	160	220	16	1¼	22¾
20	27½	1 11/16	23	22	5 11/16	2⅞	4 1/16	19.25	20.20	20.25	2⅛	180	165	195	285	20	1¼	25
22	29½	1 13/16	25¼	24¼	5⅞	3⅛	4¼	21.25	22.22	22.25	2⅜	225	185	245	355	20	1⅜	27¼
24	32	1⅞	27¼	26⅛	6	3¼	4⅜	23.25	24.25	24.25	2½	260	220	275	430	20	1⅜	29½

ANSI B16.5 covers only sizes through 24". Larger sizes as listed below have the same flange and drilling dimensions as Class 125 Cast Iron Flanges, ASA B16.1.

26	34¼	2	29¼	28½	5	3⅜	—	To be specified by purchaser	26.25	—	—	300	250	—	525	24	1⅜	31¾
28	36½	2 1/16	31¼	30¾	5 1/16	3 7/16	—		28.25	—	—	315	285	—	620	28	1⅜	34
30	38¾	2⅛	33¾	32¾	5⅛	3½	—		30.25	—	—	360	315	—	720	28	1⅜	36
32	41¾	2¼	35¾	35	5¼	3⅝	—		32.25	—	—	435	395	—	870	28	1⅝	38½
34	43¾	2 5/16	37¾	37	5 5/16	3 11/16	—		34.25	—	—	465	420	—	990	32	1⅝	40½
36	46	2⅜	40¼	39¼	5⅜	3¾	—		36.25	—	—	520	480	—	1125	32	1⅝	42¾
42	53	2⅝	47	46	5⅝	4	—		42.25	—	—	750	680	—	1625	36	1⅝	49½

Courtesy of Taylor Forge

FLANGES

DIMENSIONS

WELDING NECK

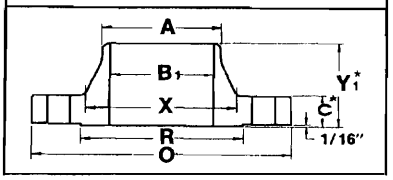

SLIP-ON

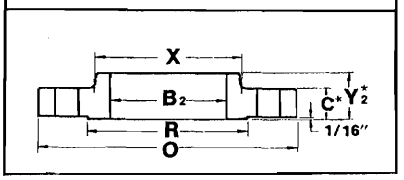

BLIND

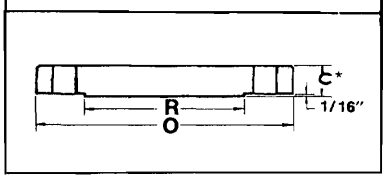

300-lb.

Nom. Pipe Size	Outside Diam.	Thkn. (min.)	O.D. of Raised Face	Hub Diam.	Length thru Hub			Bore □			Depth of Sock.	Approx. Weight (Lbs.)				Drilling		
					Wldg. Neck	Slip-on Thrd. Sock. W.	Lap Joint	Wldg.[2] Neck	Slip-On Sock. W.	Lap Joint		Wldg. Neck	Slip-On Thrd. Sock. W.	Lap Joint	Blind	No. Holes	Diam. Holes	Bolt Circle Diam.
	O	C	R	X	Y_1	Y_2	Y_3	B_1	B_2	B_3	D							
½	3¾	9/16	1⅜	1½	2 1/16	⅞	⅞	0.62	0.88	0.90	⅜	2	2	2	2	4	⅝	2⅝
¾	4⅝	⅝	1 11/16	1⅞	2¼	1	1	0.82	1.09	1.11	7/16	3	3	3	3	4	¾	3¼
1	4⅞	11/16	2	2⅛	2 7/16	1 1/16	1 1/16	1.05	1.36	1.38	½	4	3	3	3	4	¾	3½
1¼	5¼	¾	2½	2½	2 9/16	1 1/16	1 1/16	1.38	1.70	1.72	9/16	5	4	4	4	4	¾	3⅞
1½	6⅛	13/16	2⅞	2¾	2 11/16	1 3/16	1 3/16	1.61	1.95	1.97	⅝	7	6	6	6	4	⅞	4½
2	6½	⅞	3⅝	3 5/16	2¾	1 5/16	1 5/16	2.07	2.44	2.46	11/16	9	7	7	8	8	¾	5
2½	7½	1	4⅛	3 15/16	3	1½	1½	2.47	2.94	2.97	¾	12	10	10	12	8	⅞	5⅞
3	8¼	1⅛	5	4⅝	3⅛	1 11/16	1 11/16	3.07	3.57	3.60	13/16	15	13	13	16	8	⅞	6⅝
3½	9	1 3/16	5½	5¼	3 3/16	1¾	1¾	3.55	4.07	4.10	—	18	17	17	21	8	⅞	7¼
4	10	1¼	6 3/16	5¾	3⅜	1⅞	1⅞	4.03	4.57	4.60	—	25	22	22	27	8	⅞	7⅞
5	11	1⅜	7 5/16	7	3⅞	2	2	5.05	5.66	5.69	—	32	28	28	35	8	⅞	9¼
6	12½	1 7/16	8½	8⅛	3⅞	2 1/16	2 1/16	6.07	6.72	6.75	—	42	39	39	50	12	⅞	10⅝
8	15	1⅝	10⅝	10¼	4⅜	2 7/16	2 7/16	7.98	8.72	8.75	—	67	58	58	81	12	1	13
10	17½	1⅞	12¾	12⅝	4⅝	2⅝	3¾	10.02	10.88	10.92	—	91	81	91	124	16	1⅛	15¼
12	20½	2	15	14¾	5⅛	2⅞	4	12.00	12.88	12.92	—	140	115	140	185	16	1¼	17¾
14	23	2⅛	16¼	16¾	5⅝	3	4⅜	13.25	14.14	14.18	—	180	165	190	250	20	1¼	20¼
16	25½	2¼	18½	19	5¾	3¼	4¾	15.25	16.16	16.19	—	250	190	250	295	20	1⅜	22½
18	28	2⅜	21	21	6¼	3½	5⅛	17.25	18.18	18.20	—	320	250	295	395	24	1⅜	24¾
20	30½	2½	23	23⅛	6⅜	3¾	5½	19.25	20.20	20.25	—	400	315	370	505	24	1⅜	27
22	33	2⅝	25¼	25¼	6½	4	5¾	21.25	22.22	22.25	—	465	370	435	640	24	1⅝	29¼
24	36	2¾	27¼	27⅝	6⅝	4 3/16	6	23.25	24.25	24.25	—	580	475	550	790	24	1⅝	32

MSS—SP44 Class 300** ■ ASTM A105-II

26	38¼	3⅛	29½	28⅜	7¼	—	—	To be specified by purchaser	—	—	—	670	570	—	1050	28	1¾	34½
28	40¾	3⅜	31½	30½	7¾	—	—		—	—	—	810	720	—	1275	28	1¾	37
30	43	3⅝	33¾	32 5/16	8¼	—	—		—	—	—	930	810	—	1500	28	1⅞	39¼
32	45¼	3⅞	36	34 11/16	8¾	—	—		—	—	—	1025	890	—	1775	28	2	41½
34	47½	4	38	36⅞	9⅛	—	—		—	—	—	1200	1075	—	2025	28	2	43½
36	50	4⅛	40¼	39	9½	—	—		—	—	—	1300	1200	—	2275	32	2⅛	46
42	57	4⅝	47	45 7/16	10⅞	—	—		—	—	—	1740.	1610	—	3165	36	2⅛	52¾

400-lb. (NOTE: Sizes ½" thru 3½" are identical with 600 lb. flanges (see next page).

4	10	1⅜	6 3/16	5¾	3½	2	2	To be specified by purchaser	4.57	4.60	Not manufactured in 400-lb.	35	26	25	33	8	1	7⅞
5	11	1½	7 5/16	7	4	2⅛	2⅛		5.66	5.69		43	31	29	44	8	1	9¼
6	12½	1⅝	8½	8⅛	4 1/16	2¼	2¼		6.72	6.75		57	44	42	61	12	1	10⅝
8	15	1⅞	10⅝	10¼	4⅝	2 11/16	2 11/16		8.72	8.75		89	67	64	100	12	1⅛	13
10	17½	2⅛	12¾	12⅝	4⅞	2⅞	4		10.88	10.92		125	91	110	155	16	1¼	15¼
12	20½	2¼	15	14¾	5⅜	3⅛	4¼		12.88	12.92		175	130	150	225	16	1⅜	17¾
14	23	2⅜	16¼	16¾	5⅞	3 5/16	4⅝		14.14	14.18		230	180	205	290	20	1⅜	20¼
16	25½	2½	18½	19	6	3 11/16	5		16.16	16.19		295	235	260	370	20	1½	22½
18	28	2⅝	21	21	6½	3⅞	5⅜		18.18	18.20		350	285	315	455	24	1½	24¾
20	30½	2¾	23	23⅛	6⅝	4	5¾		20.20	20.25		425	345	385	587	24	1⅝	27
22	33	2⅞	25¼	25¼	6¾	4¼	6		22.22	22.25		505	405	455	720	24	1¾	29¼
24	36	3	27¼	27⅝	6⅞	4½	6¼		24.25	24.25		620	510	570	890	24	1⅞	32

MSS—SP44 Class 400** ■ ASTM A105-II

26	38¼	3½	29½	28⅝	7⅝	—	—		—	—		750	650	—	1125	28	1⅞	34½
28	40¾	3¾	31½	30 13/16	8½	—	—		—	—		880	780	—	1425	28	2	37
30	43	4	33¾	32 15/16	8⅝	—	—		—	—		1000	900	—	1675	28	2⅛	39¼
32	45¼	4¼	36	35	9⅛	—	—		—	—		1150	1025	—	1975	28	2⅛	41½
34	47½	4⅜	38	37 3/16	9½	—	—		—	—		1300	1150	—	2250	28	2⅛	43½
36	50	4½	40¼	39⅜	9⅞	—	—		—	—		1475	1325	—	2525	32	2⅛	46

Courtesy of Taylor Forge

FLANGES DIMENSIONS

THREADED

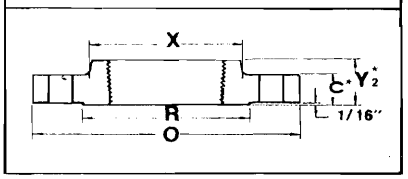

LAP JOINT

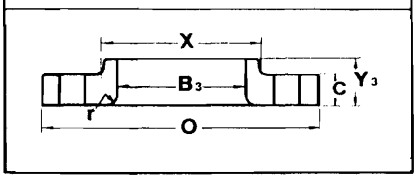

SOCKET-WELD †

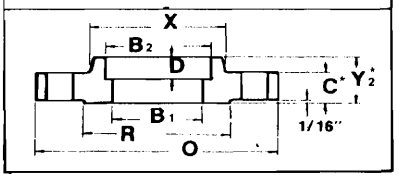

600-lb.

Nom. Pipe Size	Outside Diam.	Thkn. (min.)	O.D. of Raised Face	Hub Diam.	Length thru Hub: Wldg. Neck	Length thru Hub: Slip-On Thrd. Sock. W.	Length thru Hub: Lap Joint	Bore□: Wldg. Neck	Bore□: Slip-On Socket W.	Bore□: Lap Joint	Depth of Socket	Approx. Weight (Lbs.): Wldg. Neck	Approx. Weight (Lbs.): Slip-On Thrd. Sock. W.	Approx. Weight (Lbs.): Lap Joint	Approx. Weight (Lbs.): Blind	Drilling: No. Holes	Drilling: Diam. Holes	Drilling: Bolt Circle Diam.
	O	C	R	X	Y_1	Y_2	Y_3	B_1	B_2	B_3	D							
½	3¾	9/16	1⅜	1½	2 1/16	⅞	⅞	To be specified by purchaser	0.88	0.90	⅜	2	2	2	2	4	⅝	2⅝
¾	4⅝	⅝	1 11/16	1⅞	2¼	1	1		1.09	1.11	7/16	4	3	3	3	4	¾	3¼
1	4⅞	11/16	2	2⅛	2 7/16	1 1/16	1 1/16		1 36	1.38	½	4	4	4	4	4	¾	3½
1¼	5¼	13/16	2½	2½	2⅝	1⅛	1⅛		1.70	1.72	9/16	6	5	5	5	4	¾	3⅞
1½	6⅛	⅞	2⅞	2¾	2¾	1¼	1¼		1.95	1.97	⅝	8	7	7	8	4	⅞	4½
2	6½	1	3⅝	3 5/16	2⅞	1 7/16	1 7/16		2.44	2.46	11/16	12	9	9	10	8	¾	5
2½	7½	1⅛	4⅛	3 15/16	3⅛	1⅝	1⅝		2.94	2.97	¾	18	13	12	15	8	⅞	5⅞
3	8¼	1¼	5	4⅝	3¼	1 13/16	1 13/16		3.57	3.60	13/16	23	16	15	20	8	⅞	6⅝
3½	9	1⅜	5½	5¼	3⅜	1 15/16	1 15/16		4.07	4.10	—	26	21	20	29	8	1	7¼
4	10¾	1½	6 3/16	6	4	2⅛	2⅛		4.57	4.60	—	42	37	36	41	8	1	8½
5	13	1¾	7 5/16	7 7/16	4½	2⅜	2⅜		5.66	5.69	—	68	63	61	68	8	1⅛	10½
6	14	1⅞	8½	8¾	4⅝	2⅝	2⅝		6.72	6.75	—	81	80	78	86	12	1⅛	11½
8	16½	2 3/16	10⅝	10¾	5¼	3	3		8.72	8.75	—	120	115	110	140	12	1¼	13¾
10	20	2½	12¾	13½	6	3⅜	4⅜		10.88	10.92	—	190	170	170	230	16	1⅜	17
12	22	2⅝	15	15¾	6⅛	3⅝	4⅝		12.88	12.92	—	225	200	200	295	20	1⅜	19¼
14	23¾	2¾	16¼	17	6½	3 11/16	5		14.14	14.18	—	280	230	250	355	20	1½	20¾
16	27	3	18½	19½	7	4 3/16	5½		16.16	16.19	—	390	330	365	495	20	1⅝	23¾
18	29¼	3¼	21	21½	7¼	4⅝	6		18.18	18.20	—	475	400	435	630	20	1¾	25¾
20	32	3½	23	24	7½	5	6½		20.20	20.25	—	590	510	570	810	24	1¾	28½
22	34¼	3¾	25¼	26¼	7¾	5¼	6⅞		22.22	22.25	—	720	590	670	1000	24	1⅞	30⅝
24	37	4	27¼	28¼	8	5½	7¼		24.25	24.25	—	830	730	810	1250	24	2	33
MSS—SP44 Class 600** ■																		ASTM A105-II
26	40	4¼	29½	29 7/16	8¾	—	—		—	—	—	1025	950	—	1525	28	2	36
28	42¼	4⅜	31½	31⅝	9¼	—	—		—	—	—	1175	1075	—	1750	28	2⅛	38
30	44½	4½	33¾	33 15/16	9¾	—	—		—	—	—	1300	1175	—	2000	28	2⅛	40¼
32	47	4⅝	36	36⅛	10¼	—	—		—	—	—	1500	1375	—	2300	28	2⅜	42½
34	49	4¾	38	38 5/16	10⅝	—	—		—	—	—	1650	1500	—	2575	28	2⅜	44½
36	51¾	4⅞	40¼	40⅝	11⅛	—	—		—	—	—	1750	1600	—	2950	28	2⅝	47

900-lb. (NOTE: Sizes ½" thru 2½" are identical with 1500 lb. flanges (see next page).

3	9½	1½	5	5	4	2⅛	2⅛	To be specified by purchaser	3.57	3.60	—	31	26	25	29	8	1	7½
4	11½	1¾	6 3/16	6¼	4½	2¾	2¾		4.57	4.60	—	53	53	51	54	8	1¼	9¼
5	13¾	2	7 5/16	7½	5	3⅛	3⅛		5.66	5.69	—	86	83	81	87	8	1⅜	11
6	15	2 3/16	8½	9¼	5½	3⅜	3⅜		6.72	6.75	—	110	110	105	115	12	1¼	12½
8	18½	2½	10⅝	11¾	6⅜	4	4½		8.72	8.75	—	175	170	190	200	12	1½	15½
10	21½	2¾	12¾	14½	7¼	4¼	5		10.88	10.92	—	260	245	275	290	16	1½	18½
12	24	3⅛	15	16½	7⅞	4⅝	5⅝		12.88	12.92	—	325	325	370	415	20	1½	21
14	25¼	3⅜	16¼	17¾	8⅜	5⅛	6⅛		14.14	14.18	—	400	400	415	520	20	1⅝	22
16	27¾	3½	18½	20	8½	5¼	6½		16.16	16.19	—	495	425	465	600	20	1¾	24¼
18	31	4	21	22¼	9	6	7½		18.18	18.20	—	680	600	650	850	20	2	27
20	33¾	4¼	23	24½	9¾	6¼	8¼		20.20	20.25	—	830	730	810	1075	20	2⅛	29½
22	—	—	—	—	—	—	—		—	—	—	—	—	—	—	—	—	—
24	41	5½	27¼	29½	11½	8	10½		24.25	24.25	—	1500	1400	1550	2025	20	2⅝	35½
MSS—SP44 Class 900** ■																		ASTM A105-II
26	42¾	5½	29½	30½	11¼	—	—		—	—	—	1575	1525	—	2200	20	2⅞	37½
28	46	5⅝	31½	32¾	11¾	—	—		—	—	—	1850	1800	—	2575	20	3⅛	40¼
30	48½	5⅞	33¾	35	12¼	—	—		—	—	—	2150	2075	—	3025	20	3⅛	42¾
32	51¾	6¼	36	37¼	13	—	—		—	—	—	2575	2500	—	3650	20	3⅜	45½
34	55	6½	38	39⅝	13¾	—	—		—	—	—	3025	2950	—	4275	20	3⅝	48¼
36	57½	6¾	40¼	41⅞	14¼	—	—		—	—	—	3450	3350	—	4900	20	3⅝	50¾

Courtesy of Taylor Forge

FLANGES

DIMENSIONS

WELDING NECK

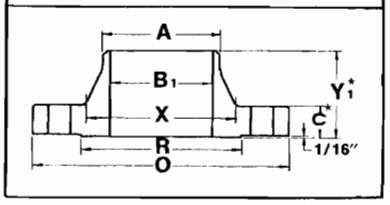

SLIP-ON

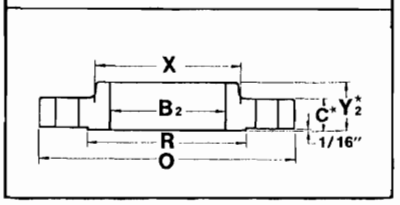

LAP JOINT

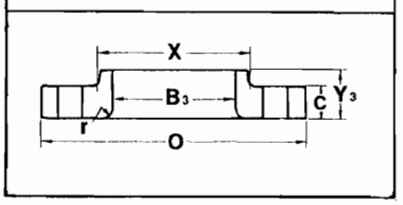

1500-lb.

Nom. Pipe Size	Outside Diam.	Thkn. (min.)	O.D. of Raised Face	Hub Diam.	Length thru Hub: Wldg. Neck	Length thru Hub: Slip-On Thrd. ♦ Sock. W.	Length thru Hub: Lap Joint	Bore□: Wldg. Neck	Bore□: Slip-on Sock. W.	Bore□: Lap Joint	Depth of Socket	Approx. Wgt. (Lbs.): Wldg. Neck	Approx. Wgt. (Lbs.): Slip-On♦ Thrd. Sock. W.	Approx. Wgt. (Lbs.): Lap Joint	Approx. Wgt. (Lbs.): Blind♦	Drilling: No. Holes	Drilling: Diam. Holes	Drilling: Bolt Circle Diam.
	O	C	R	X	Y_1	Y_2	Y_3	B_1	B_2	B_3	D							
½	4¾	⅞	1⅜	1½	2⅜	1¼	1¼	To be specified by customer	0.88	0.90	⅜	5	4	4	4	4	⅞	3¼
¾	5⅛	1	1 11/16	1¾	2¾	1⅜	1⅜		1.09	1.11	7/16	6	5	5	6	4	⅞	3½
1	5⅞	1⅛	2	2 1/16	2⅞	1⅝	1⅝		1.36	1.38	½	9	8	8	8	4	1	4
1¼	6¼	1⅛	2½	2½	2⅞	1⅝	1⅝		1.70	1.72	9/16	10	9	9	9	4	1	4⅜
1½	7	1¼	2⅞	2¾	3¼	1¾	1¾		1.95	1.97	⅝	13	12	12	13	4	1⅛	4⅞
2	8½	1½	3⅝	4⅛	4	2¼	2¼		2.44	2.46	11/16	25	25	25	25	8	1	6½
2½	9⅝	1⅝	4⅛	4⅞	4⅛	2½	2½		2.94	2.97	¾	36	36	35	35	8	1⅛	7½
3	10½	1⅞	5	5¼	4⅝	2⅞	2⅞		3.57	3.60	—	48	48	47	48	8	1¼	8
3½	—	—	—	—	—	—	—		—	—	—	—	—	—	—	—	—	—
4	12¼	2⅛	6 3/16	6⅜	4⅞	3 9/16	3 9/16		4.57	4.60	—	73	73	75	73	8	1⅜	9½
5	14¾	2⅞	7 5/16	7¾	6⅛	4⅛	4⅛		5.66	5.69	—	130	130	140	140	8	1⅝	11½
6	15½	3¼	8½	9	6¾	4 11/16	4 11/16		6.72	6.75	—	165	165	170	160	12	1½	12½
8	19	3⅝	10⅝	11½	8⅜	5⅝	5⅝		8.72	8.75	—	275	260	285	300	12	1¾	15½
10	23	4¼	12¾	14½	10	6¼	7		10.88	10.92	—	455	435	485	510	12	2	19
12	26½	4⅞	15	17¾	11⅛	7⅛	8⅝		12.88	12.92	—	690	580	630	690	16	2⅛	22½
14	29½	5¼	16¼	19½	11¾	—	9½		—	14.18	—	940	—	890	975	16	2⅜	25
16	32½	5¾	18½	21¾	12¼	—	10¼		—	16.19	—	1250	—	1150	1300	16	2⅝	27¾
18	36	6⅜	21	23½	12⅞	—	10⅞		—	18.20	—	1625	—	1475	1750	16	2⅞	30½
20	38¾	7	23	25¼	14	—	11½		—	20.25	—	2050	—	1775	2225	16	3⅛	32¾
22	—	—	—	—	—	—	—		—	—	—	—	—	—	—	—	—	—
24	46	8	27¼	30	16	—	13		—	24.25	—	3325	—	2825	3625	16	3⅝	39

2500-lb.

½	5¼	1 3/16	1⅜	1 11/16	2⅞	1 9/16	1 9/16	To be specified by customer	0.88	0.90	Not manufactured in 2500-lb.	7	7	7	7	4	⅞	3½
¾	5½	1¼	1 11/16	2	3⅛	1 11/16	1 11/16		1.09	1.11		8	8	8	8	4	⅞	3¾
1	6¼	1⅜	2	2¼	3½	1⅞	1⅞		1.36	1.38		12	11	11	11	4	1	4¼
1¼	7¼	1½	2½	2⅞	3¾	2 1/16	2 1/16		1.70	1.72		17	16	16	17	4	1⅛	5⅛
1½	8	1¾	2⅞	3⅛	4⅜	2⅜	2⅜		1.95	1.97		25	22	22	23	4	1¼	5¾
2	9¼	2	3⅝	3¾	5	2¾	2¾		2.44	2.46		42	38	37	39	8	1⅛	6¾
2½	10½	2¼	4⅛	4½	5⅝	3⅛	3⅛		2.94	2.97		52	55	53	56	8	1¼	7¾
3	12	2⅝	5	5¼	6⅝	3⅝	3⅝		3.57	3.60		94	83	80	86	8	1⅜	9
3½	—	—	—	—	—	—	—		—	—		—	—	—	—	—	—	—
4	14	3	6 3/16	6½	7½	4¼	4¼		4.57	4.60		145	125	120	135	8	1⅝	10¾
5	16½	3⅝	7 5/16	8	9	5⅛	5⅛		5.66	5.69		245	210	205	225	8	1⅞	12¾
6	19	4¼	8½	9¼	10¾	6	6		6.72	6.75		380	325	315	345	8	2⅛	14½
8	21¾	5	10⅝	12	12½	7	7		8.72	8.75		580	485	470	530	12	2⅛	17¼
10	26½	6½	12¾	14¾	16½	9	9		10.88	10.92		1075	930	900	1025	12	2⅝	21¼
12	30	7¼	15	17⅜	18¼	10	10		12.88	12.92		1525	1100	1100	1300	12	2⅞	24⅜

1. Dimensions are in inches. Prices on application.
2. Standard bore will be furnished unless otherwise specified.
3. Socket Weld figs. are not mfd. in 150# type over 24", in 300# and 600# over 3", in 1500# over 2½", in 400# and 2500# in any size.
4. Specifications—All Taylor Forge flanges conform to ANSI Std. B16.5 or MSS SP44 as applicable and to ASTM Spec. A181 (for 150# and 300# flanges) or A105 (for 400# and heavier flanges.
5. Welding bevel standards and tolerances.
6. Pressure—Temperature ratings.
7. Threading details.
8. Large diameter flanges.

□ Minimum bores.

*Facings: 150# and 300# flanges (except Lap Joint) furnished with 1-1/16" raised face, which is included in the thickness and hub length shown, 400# and heavier flanges (except Lap Joint) furnished with ¼" raised face, which is not included in thickness or hub length dimensions.

**Refer to Taylor Forge Pipeline Catalog 723 for complete listings of MSS-SP44 and API 605 flanges.

■ *Dimension and blind flange is same as companion flange, however, this is not true for MSS blind flanges, class 300 or heavier, 26" and larger, which have a greater thickness.*

Courtesy of Taylor Forge

DIAPHRAGM AND PISTON ACTUATORS

DIAPHRAGM ACTUATORS

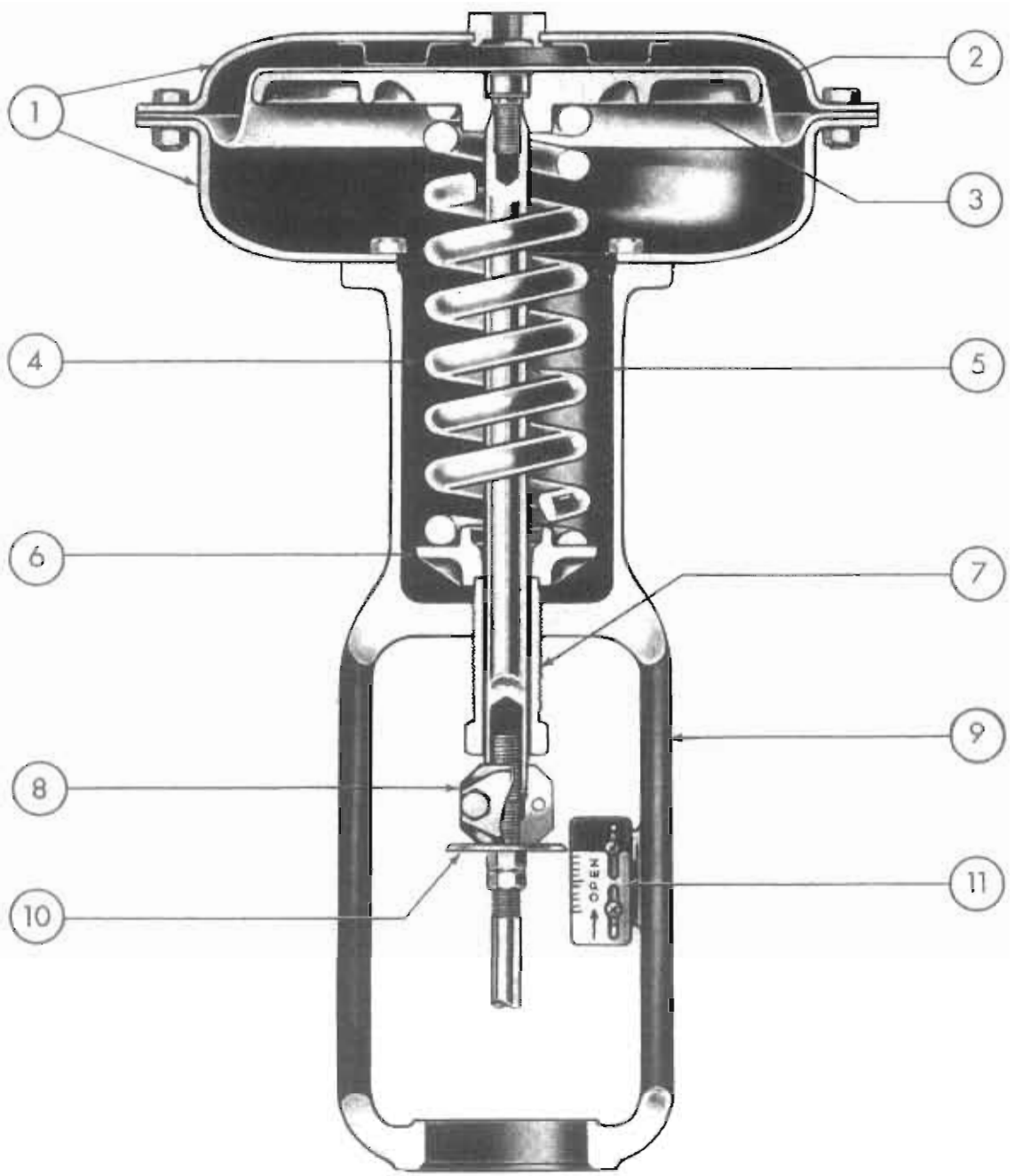

1 Diaphragm Case
2 Diaphragm
3 Diaphragm Plate
4 Actuator Spring
5 Actuator Stem
6 Spring Seat
7 Spring Adjustor
8 Stem Connector
9 Yoke
10 Travel Indicator
11 Travel Indicator Scale

Type 657 direct acting diaphragm actuator.

Courtesy of Fisher Controls

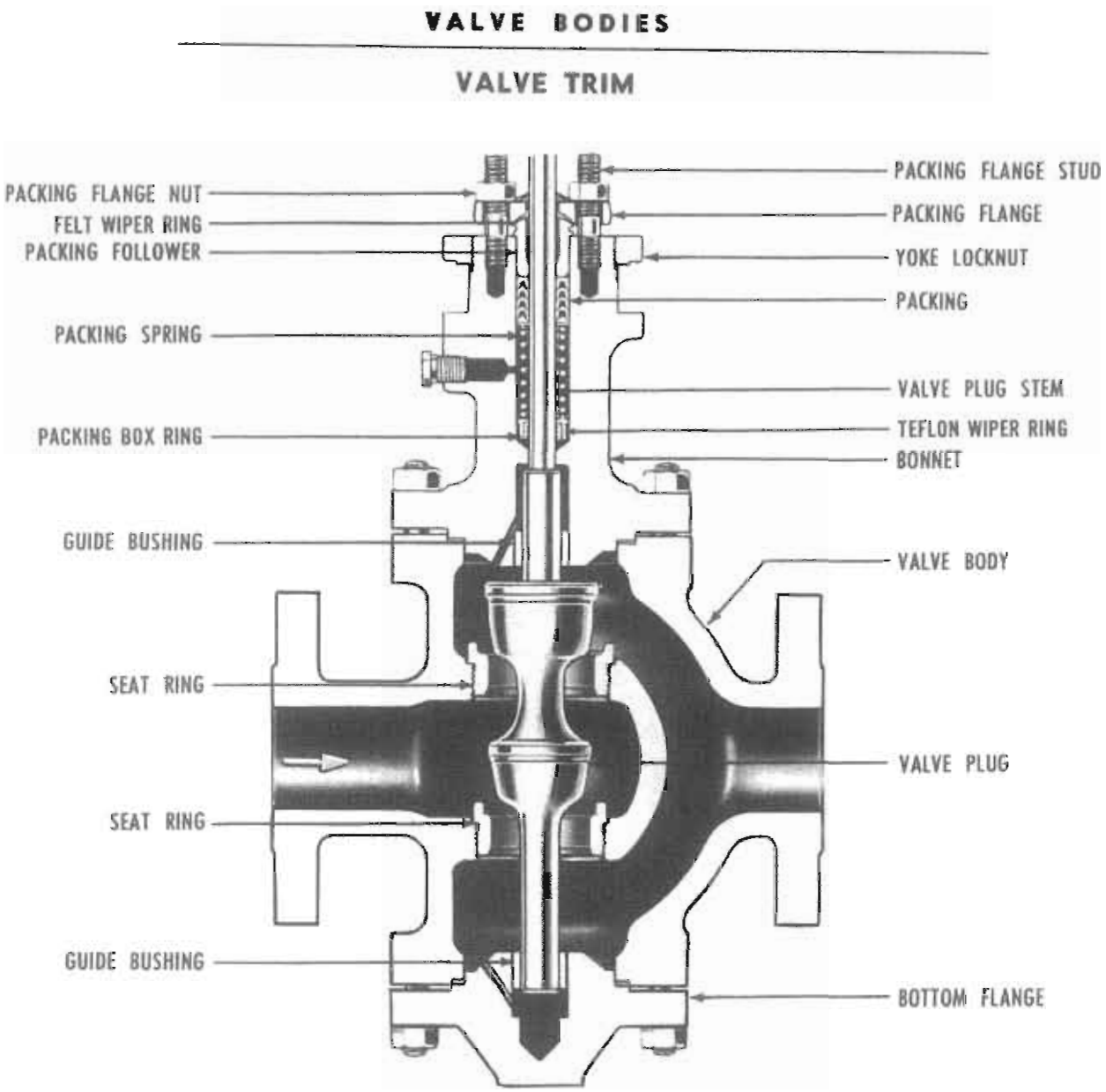

Design "A" double port body.

VALVE TRIM

The term "trim" refers to the internal parts of a valve body assembly which come in contact with the controlled fluid. Type 316 stainless steel is Fisher's standard trim material. It is satisfactory for most applications and is generally recommended for fluid temperatures up to 750°F and pressure drops up to 150 psi. For very high pressure drops or high temperature conditions, a hard surfacing alloy such as Stellite can be used on the wearing parts of the valve plug, seat rings, guide bushings and guide posts. Other alloys such as Monel, Hastelloy "B", Durimet 20 or 440C stainless steel may be selected to combat individual corrosion and erosion problems.

Courtesy of Fisher Controls

CONTROL VALVE SELECTION

CONTROL VALVES WITH DESIGN "A" BODIES

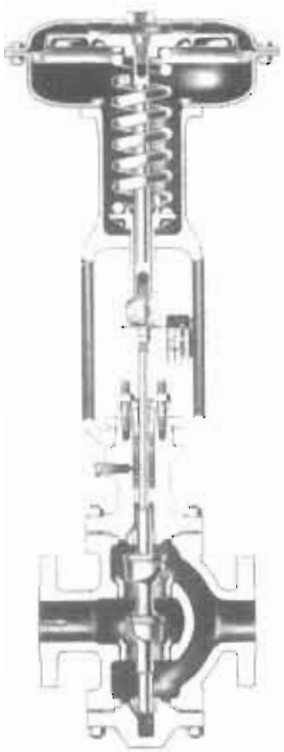

Figure 3-1. Type 657-A control valve with double port, top and bottom guided V-pup valve plug.

Figure 3-2. Type 667-A control valve with single port, top and port guided Micro-Flute valve plug.

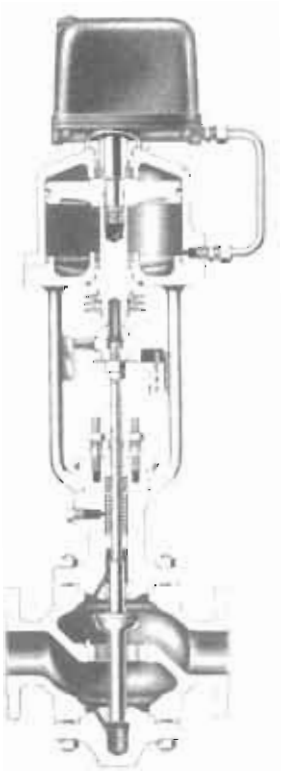

Figure 3-3. Type 470-A control valve with single port, top and bottom guided Throttle Plug valve plug.

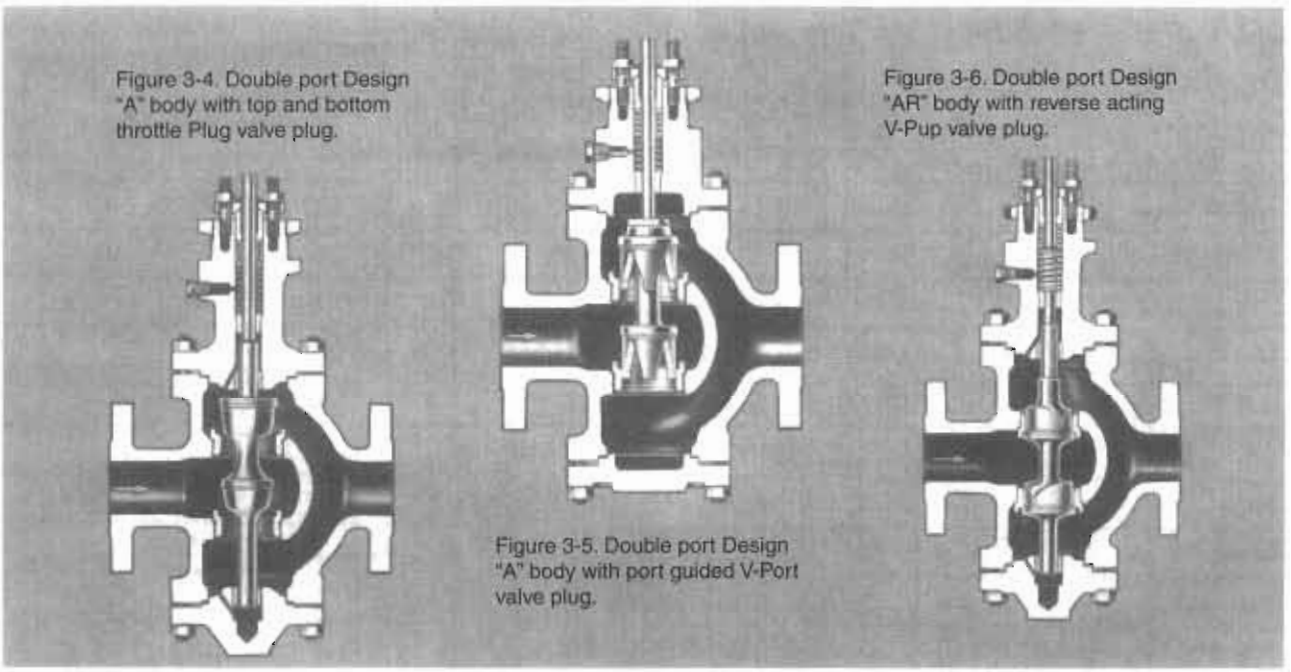

Figure 3-4. Double port Design "A" body with top and bottom throttle Plug valve plug.

Figure 3-5. Double port Design "A" body with port guided V-Port valve plug.

Figure 3-6. Double port Design "AR" body with reverse acting V-Pup valve plug.

Courtesy of Fisher Controls

ACTUATORS

Type 657 3
Type 667 3
Type 470 4
Type 472 4
Type 473 5
Type 513 5

BODIES

Design "A" Single Port . . . . . 6 and 7
Design "A" Double Port . . . . . 8 and 9
Design "AA" 10
Design "AC" . . . . . 10 and 11
Design "B" 11
Design "BA" 12
Design "BF" 12
Design "BFC" 12
Design "D" 12
Design "DA" 13
Design "DB" & "DBQ" 13
Design "DBA" & "DBAQ" 13
Design "E" 14
Design "EA" 15
Design "GS" 15
Design "HS" 16
Design "K" & "KB" 17
Design "Y" (Iron) 17
Design "Y" (Steel) 18
Design "YY" (Iron) 18
Design "YY" (Steel) 19
Design "Z" 19
Design "ZLA" 19

PROCEDURE

To obtain the overall dimensions of a control valve, add the "D" and "G" body dimensions to the "E" dimension of the actuator. Dimensions for valve bodies with a 5″ boss head are so indicated and these dimensions should be combined with one of the following actuators: Size 80 and 87, Types 657 and 667; Sizes 80, 86, 100 and 130, Type 470; Sizes 80 and 100, Types 472 and 473. Similarly, dimensions for valve bodies that can be furnished with a 1¼″ boss head are so indicated and these dimensions should be combined with the dimensions of the Type **513** or the Type 470, Size 23, actuators.

Example:

Given: 6″ Type 657-A, 150 lb. RF flanged, double port steel body with top and bottom guided valve plug.

From the table below, note that a Size 50 or 60 Type 657 actuator is normally supplied with a 6″ valve. Dimension "E" from Page 3 is 28-7/16″. From Page 8, we see that "G" is 13-5/16″ and "D" is 14-15/16″. Thus, E + G + D = 28-7/16″ + 13-5/16″ + 14-15/16″ = 56-11/16″.

NOTE: When using a valve plug requiring a top guide but not a bottom guide, such as Micro-Form valve plug, use dimension "D" under top and bottom guided and dimension "G" under skirt guided.

. . . STANDARD CONSTRUCTIONS . . .

SERIES 657 AND 667 DIAPHRAGM ACTUATORS

Actuator Size	30	34	40	45	50	60	70	80	87
Effective Area, Sq. In.	46	69	69	105	105	156	220	283	220
Stem Size, In.	3/8	3/8	1/2	1/2	3/4	3/4	3/4	1, 1-1/4	1
Yoke Boss Size, In.	2-1/8	2-1/8	2-13/16	2-13/16	3-9/16	3-9/16	3-9/16	5	5
Body Size, In.	1/2 - 1-1/2	1/2 - 1-1/2	2 - 4	2 - 4	5 - 8	5 - 8	10 - 16	10 - 16	10 - 16

SERIES 470 PISTON ACTUATORS

Actuator Size	23	30	40	43	60	63	64	80	86	100	130
Cylinder Dia., In.	4-3/4	4-3/4	6-1/8	4-3/4	8-1/2	4-3/4	6-1/8	10-3/4	8-1/2	13	17
Stem Size, In.	3/8	3/8	1/2	1/2	3/4	3/4	3/4	1	1	1-1/4	1-1/4
Yoke Boss Size, In.	1-1/4	2-1/8	2-13/16	2-13/16	3-9/16	3-9/16	3-9/16	5	5	5	5
Body Size, In.	1/2 - 2*	1/2 - 1-1/2	2 - 4	2 - 4	5 - 8	5 - 8	5 - 8	10 - 16	10 - 16	10 - 16	10 - 16

*Design "GS," "B," and "BA" bodies only.

Courtesy of Fisher Controls

ACTUATOR DIMENSIONS

TYPE 657 DIAPHRAGM ACTUATOR

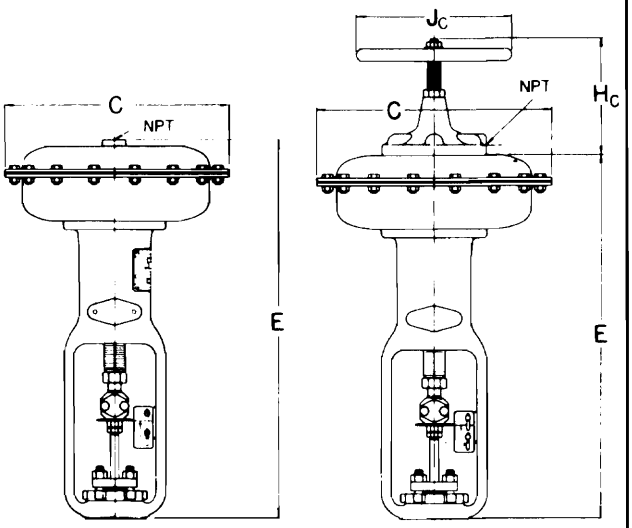

SIZE	E	C	Jc	Hc	NPT
30	17 5/16	11 3/8	6 3/4	4 3/4	1/4 - 18
34	19 5/8	13 1/8	8 3/4	6 7/16	1/4 - 18
40	21 9/16	13 1/8	8 3/4	6 7/16	1/4 - 18
45	25 15/16	16	8 3/4	7 15/16	1/4 - 18
50	28 7/16	16	8 3/4	7 15/16	1/4 - 18
60	28 7/16	18 5/8	8 3/4	7 15/16	1/4 - 18
70	33 1/16	21 1/8	14	12 5/16	1/2 - 14
87	36 15/16	21 1/8	14	12 5/16	1/2 - 14

SIZE 87 HAS A 5" BOSS

TYPE 667 DIAPHRAGM ACTUATOR

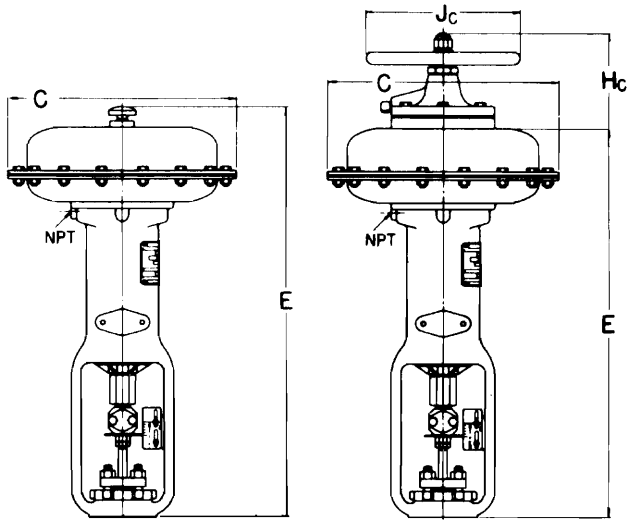

SIZE	E	C	Jc	Hc	NPT
30	18 13/16	11 3/8	6 3/4	4 11/16	1/4 - 18
34	22 9/16	13 1/8	8 3/4	4 3/4	1/4 - 18
40	23 3/8	13 1/8	8 3/4	5 3/8	1/4 - 18
45	30 1/4	16	8 3/4	6 1/4	1/4 - 18
50	30 7/8	16	8 3/4	6 5/8	1/4 - 18
60	30 7/8	18 5/8	8 3/4	6 5/8	1/4 - 18
70	36 3/4	21 1/8	14	11 1/4	1/2 - 14
87	39 1/2	21 1/8	14	11 1/4	1/2 - 14

SIZE 87 HAS A 5" BOSS

TYPE 657 - SIZE 80
(5" YOKE BOSS)

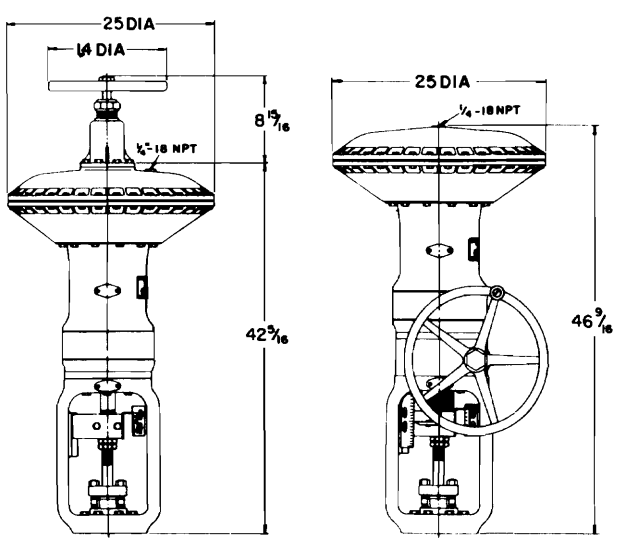

TYPE 667 - SIZE 80
(5" YOKE BOSS)

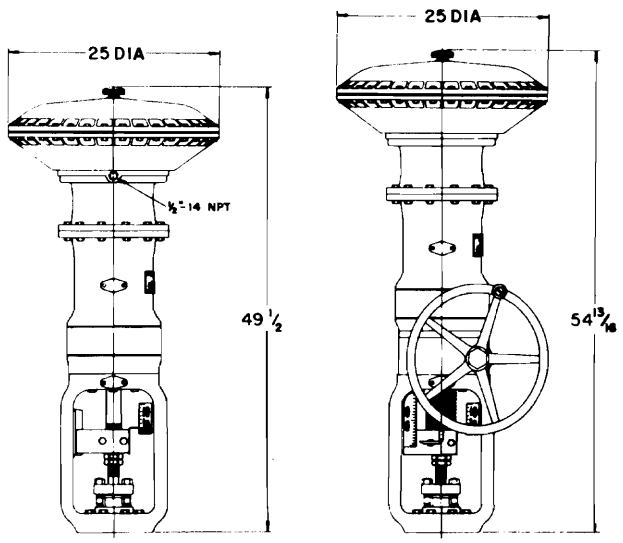

Courtesy of Fisher Controls

DESIGN "A" DOUBLE PORT IRON BODIES

PLAIN BONNET

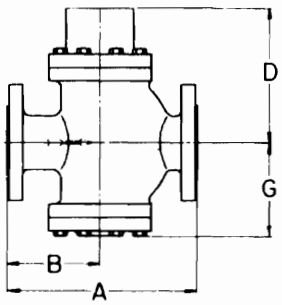

PORT GUIDED

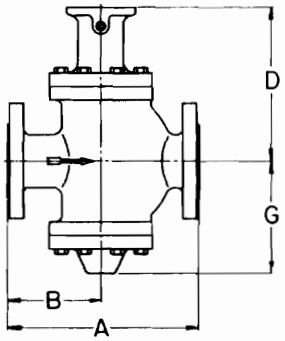

TOP AND BOTTOM GUIDED

SIZE	A			B			G	D	G	D
	SCRD	125 FF	250 RF	SCRD	125 FF	250 RF	PORT GUIDED		T & B GUIDED	
1	6	7 1/4	7 3/4	2 11/16	3 5/8	3 7/8	3 7/8	5 3/16	4 3/16	6
1 1/4	6	7 7/8	8 3/8	2 11/16	3 15/16	4 3/16	3 7/8	5 3/16	4 3/16	6
1 1/2	7 3/4	8 3/4	9 1/4	3 3/4	4 3/8	4 5/8	4 11/16	6 3/16	5 3/4	7
2	9 1/8	10	10 1/2	3 7/8	4 7/8	5 1/8	5 1/4	7 1/2	6 5/16	8 5/8
2 1/2		10 7/8	11 1/2		5 1/16	5 3/8	5 13/16	7 5/8	7 5/8	9 7/8
3		11 3/4	12 1/2		5 3/8	5 3/4	6 9/16	8 3/16	8 7/16	10 5/8
4		13 7/8	14 1/2		6 3/16	6 1/2	8 3/8	9 13/16	9 3/4	11 1/2
5		15 7/8	16 3/4		7	7 7/16	8 13/16	10 3/16	11 15/16	13 5/8
6		17 3/4	18 5/8		7 7/8	8 5/16	11 3/16	12 3/16	13 1/8	14 15/16
8		21 3/8	22 3/8		9 5/8	10 1/8	12 5/8	13 5/8	14 1/8	15 15/16
10		26 1/2	27 7/8		11 1/8	11 13/16	15 1/4	16	18 13/16	20 7/16

ABBREVIATIONS USED ABOVE: SCRD = SCREWED ENDS
FF = FLAT FACE, RF = RAISED FACE
FLANGE SPECIFICATION REFERENCE: 125 LB - USAS B16.1
250 LB - USAS B16.1

DESIGN "A" DOUBLE PORT STEEL BODIES

PLAIN BONNET

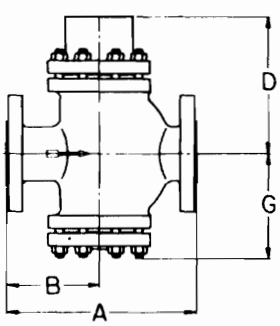

PORT GUIDED

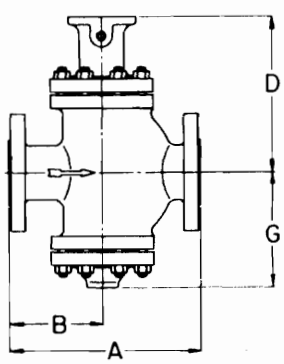

TOP AND BOTTOM GUIDED

EXTENSION BONNET

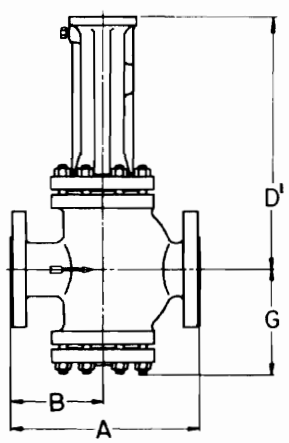

PORT GUIDED

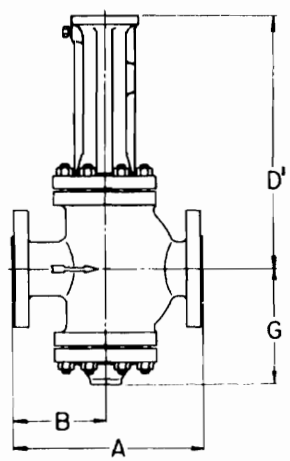

TOP AND BOTTOM GUIDED

SIZE	A									B									G	D	G	D	D'
	SCRD	150 RF	150 RTJ	300 RF	300 RTJ	400 RF	400 RTJ	600 RF	600 RTJ	SCRD	150 RF	150 RTJ	300 RF	300 RTJ	400 RF	400 RTJ	600 RF	600 RTJ	PORT GUIDED		T & B GUIDED		EXT.
1	6	7 1/4	7 3/4	7 3/4	8 1/4	*	†	8 1/4	8 1/4	2 11/16	3 5/8	3 7/8	3 7/8	4 1/8	*	†	4 1/8	4 1/8	4 5/16	5 1/4	4 1/4	6	8 9/16
1 1/4	6	7 7/8	8 3/8	8 3/8	8 7/8	*	†	9	9	2 11/16	3 15/16	4 3/16	4 3/16	4 7/16	*	†	4 1/2	4 1/2	4 5/16	5 1/4	4 1/4	6	8 9/16
1 1/2	7 3/4	8 3/4	9 1/4	9 1/4	9 3/4	*	†	9 7/8	9 7/8	3 3/4	4 3/8	4 5/8	4 5/8	4 7/8	*	†	4 15/16	4 15/16	5 3/8	6 3/16	5 7/8	7	9 1/2
2	9 1/8	10	10 1/2	10 1/2	11 1/8	*	†	11 1/4	11 3/8	3 7/8	4 7/8	5 1/8	5 1/8	5 7/16	*	†	5 1/2	5 9/16	5 15/16	7 5/8	6 7/16	8 5/8	14 1/16
2 1/2		10 7/8	11 3/8	11 1/2	12 1/8	*	†	12 1/4	12 3/8		5 1/16	5 5/16	5 3/8	5 11/16	*	†	5 3/4	5 13/16	6 5/8	7 5/8	7 3/4	9 7/8	14 1/2
3		11 3/4	12 1/4	12 1/2	13 1/8	*	†	13 1/4	13 3/8		5 3/8	5 5/8	5 3/4	6 1/16	*	†	6 1/8	6 3/16	7 9/16	8 3/16	8 7/16	10 5/8	15 1/4
4		13 7/8	14 3/8	14 1/2	15 1/8	15 1/4	15 3/8	15 1/2	15 5/8		6 3/16	6 7/16	6 1/2	6 13/16	6 7/8	6 15/16	7	7 1/16	9 3/8	9 13/16	9 15/16	11 1/2	17
5		15 7/8	16 3/8	16 3/4	17 3/8	17 1/2	17 5/8	18	18 1/8		7	7 1/4	7 7/16	7 3/4	7 13/16	7 7/8	8 1/16	8 1/8	9 13/16	10 3/16	12 1/8	13 5/8	16 5/8
6		17 3/4	18 1/4	18 5/8	19 1/4	19 1/2	19 5/8	20	20 1/8		7 7/8	8 1/8	8 5/16	8 5/8	8 3/4	8 13/16	9	9 1/16	11 15/16	12 3/16	13 5/16	14 15/16	18 3/4
8		21 3/8	21 7/8	22 3/8	23	23 3/8	23 1/2	24	24 1/8		9 5/8	9 7/8	10 1/8	10 7/16	10 5/8	10 11/16	10 15/16	11	13 3/4	13 5/8	14 1/8	15 15/16	20 5/16
10		26 1/2	27	27 7/8	28 1/2	28 7/8	29	29 5/8	29 3/4		11 1/8	11 3/8	11 13/16	12 1/8	12 5/16	12 3/8	12 11/16	12 3/4	16 3/16	16	18 13/16	20 7/16	22 13/16

ABBREVIATIONS USED ABOVE: SCRD = SCREWED ENDS, RF = RAISED FACE, RTJ = RING TYPE JOINT
FLANGE SPECIFICATION REFERENCE: 150-300-400-600 LB. USAS B16.5
* DIMENSIONALLY THE SAME AS 600 LB RF
† DIMENSIONALLY THE SAME AS 600 LB RTJ

Courtesy of Fisher Controls

DESIGN "A" SINGLE PORT IRON BODIES

PLAIN BONNET

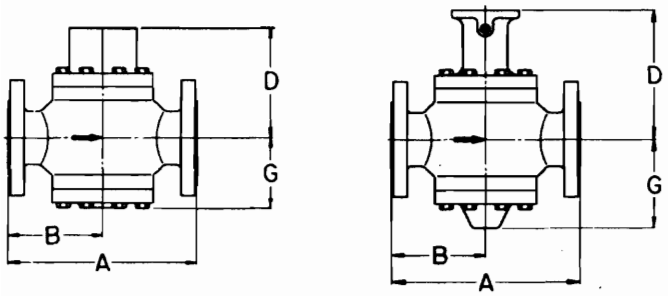

PORT GUIDED

TOP AND BOTTOM GUIDED

SIZE	A			B			G	D	G	D
	SCRD	125 FF	250 RF	SCRD	125 FF	250 RF	PORT GUIDED		T & B GUIDED	
1/2	6		7 1/2	3		3 3/4	3 1/8	4 7/16	3 7/16	5 1/4
3/4	6	7 3/8	7 5/8	3	3 11/16	3 13/16	3 1/8	4 7/16	3 7/16	5 1/4
1	6 1/2	7 1/4	7 3/4	3 1/4	3 5/8	3 7/8	3 3/8	4 11/16	3 11/16	5 1/2
1 1/4	6 1/2	7 7/8	8 3/8	3 1/4	3 15/16	4 5/16	3 3/8	4 11/16	3 11/16	5 1/2
1 1/2	8	8 3/4	9 1/4	4	4 3/8	4 5/8	3 25/16	5 7/16	5	6 1/4
2	9 1/4	10	10 1/2	4 5/8	5	5 1/4	3 25/16	6 3/16	5	7 5/16
2 1/2		10 7/8	11 1/2		5 7/16	5 3/4	4 11/16	6 1/2	6 1/2	8 3/4
3		11 3/4	12 1/2		5 7/8	6 1/4	5 1/4	6 7/8	7 1/8	9 5/16
4		13 7/8	14 1/2		6 15/16	7 1/4	6 7/16	7 7/8	7 13/16	9 9/16
5		15 7/8	16 3/4		7 15/16	8 5/8	7 5/8	9	10 3/4	12 7/16
6		17 3/4	18 5/8		8 7/8	9 5/16	8 9/16	9 5/8	10 1/2	12 5/16
8		21 3/8	22 3/8		10 11/16	11 3/16	9 13/16	10 13/16	11 5/16	13 1/8
10		26 1/2	27 7/8		13 1/4	13 15/16	12 7/16	13 3/16	16	17 5/8

ABBREVIATIONS USED ABOVE: SCRD = SCREWED ENDS
FF = FLAT FACE, RF = RAISED FACE
FLANGE SPECIFICATION REFERENCE: 125 LB. - USAS B16.1
250 LB. - USAS B16.1

DESIGN "A" SINGLE PORT STEEL BODIES

PLAIN BONNET

EXTENSION BONNET

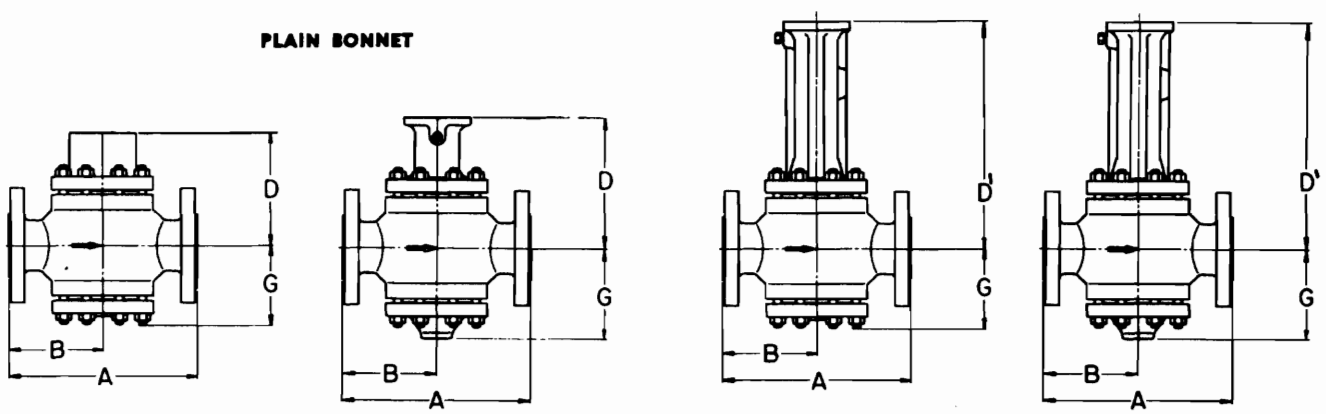

PORT GUIDED

TOP AND BOTTOM GUIDED

PORT GUIDED

TOP AND BOTTOM GUIDED

SIZE	A									B									G	D	G	D	D'
	SCRD	150 RF	150 RTJ	300 RF	300 RTJ	400 RF	400 RTJ	600 RF	600 RTJ	SCRD	150 RF	150 RTJ	300 RF	300 RTJ	400 RF	400 RTJ	600 RF	600 RTJ	PORT GUIDED		T & B GUIDED		EXT.
1/2	6			7 1/2	7 15/16	*	†	8	7 15/16	3			3 3/4	3 31/32	*	†	4	3 31/32	3 9/16	4 1/2	3 1/2	5 1/4	7 15/16
3/4	6	7 3/8		7 5/8	8 1/8	*	†	8 1/8	8 1/8	3	3 11/16		3 13/16	4 1/16	*	†	4 1/16	4 1/16	3 9/16	4 1/2	3 1/2	5 1/4	7 13/16
1	6 1/2	7 1/4	7 3/4	7 3/4	8 1/4	*	†	8 1/4	8 1/4	3 1/4	3 5/8	3 7/8	3 7/8	4 1/8	*	†	4 1/8	4 1/8	3 13/16	4 3/4	3 3/4	5 1/2	8 1/16
1 1/4	6 1/2	7 7/8	8 3/8	8 3/8	8 7/8	*	†	9	9	3 1/4	3 15/16	4 3/16	4 3/16	4 7/16	*	†	4 1/2	4 1/2	3 13/16	4 3/4	3 3/4	5 1/2	8 1/16
1 1/2	8	8 3/4	9 1/4	9 1/4	9 3/4	*	†	9 7/8	9 7/8	4	4 3/8	4 5/8	4 5/8	4 7/8	*	†	4 15/16	4 15/16	4 5/8	5 3/16	5 1/8	6 1/4	8 3/4
2	9 1/4	10	10 1/2	10 1/2	11 1/8	*	†	11 1/4	11 3/8	4 5/8	5	5 1/4	5 1/4	5 9/16	*	†	5 5/8	5 11/16	4 5/8	6 5/16	5 1/8	7 5/16	12 3/4
2 1/2		10 7/8	11 3/8	11 1/2	12 1/8	*	†	12 1/4	12 3/8		5 7/16	5 11/16	5 3/4	6 1/16	*	†	6 1/8	6 3/16	5 1/2	6 1/2	6 5/8	8 3/4	13 3/8
3		11 3/4	12 1/4	12 1/2	13 1/8	*	†	13 1/4	13 3/8		5 7/8	6 1/8	6 1/4	6 9/16	*	†	6 5/8	6 11/16	6 1/4	6 7/8	7 1/8	9 5/16	13 15/16
4		13 7/8	14 3/8	14 1/2	15 1/8	15 1/4	15 3/8	15 1/2	15 5/8		6 15/16	7 3/16	7 1/4	7 9/16	7 5/8	7 11/16	7 3/4	7 13/16	7 7/16	7 7/8	8	9 9/16	15 1/16
5		15 7/8	16 3/8	16 3/4	17 3/8	17 1/2	17 5/8	18	18 1/8		7 15/16	8 3/16	8 3/8	8 11/16	8 3/4	8 13/16	9	9 1/16	8 5/8	9	10 15/16	12 7/16	15 7/16
6		17 3/4	18 1/4	18 5/8	19 1/4	19 1/2	19 5/8	20	20 1/8		8 7/8	9 1/8	9 5/16	9 5/8	9 3/4	9 13/16	10	10 1/16	9 5/8	9 3/16	10 11/16	12 5/16	16 1/8
8		21 3/8	21 7/8	22 3/8	23	23 3/8	23 1/2	24	24 1/8		10 11/16	10 15/16	11 3/16	11 1/2	11 11/16	11 3/4	12	12 1/16	10 15/16	10 13/16	11 5/16	13 1/8	17 3/8
10		26 1/2	27	27 7/8	28 1/2	28 7/8	29	29 5/8	29 3/4		13 1/4	13 1/2	13 15/16	14 1/4	14 7/16	14 1/2	14 13/16	14 7/8	13 3/8	13 3/16	16	17 5/8	20

ABBREVIATIONS USED ABOVE: SCRD = SCREWED ENDS, RF = RAISED FACE, RTJ = RING TYPE JOINT
FLANGE SPECIFICATION REFERENCE: 150-300-400-600 LB. USAS B16.5
* DIMENSIONALLY THE SAME AS 600 LB. RF
† DIMENSIONALLY THE SAME AS 600 LB. RTJ

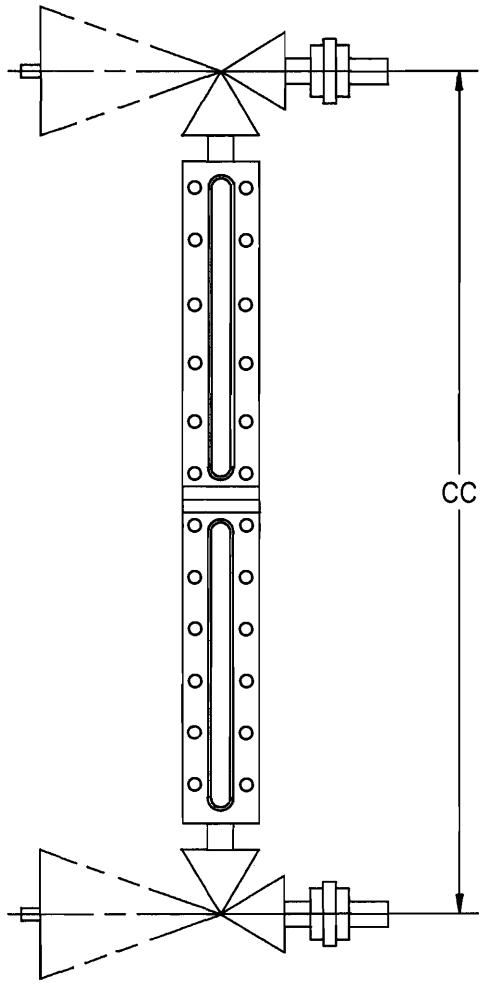

ELEVATION

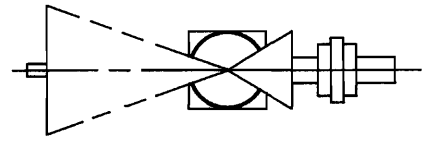

PLAN

NUMBER OF SECTIONS	VISIBLE GLASS	UNION CONNECTION CC
2	15	22
2	18	25
2	21	28
2	24	31
2	27	34
3	30	37
3	33	40
3	36	43
3	39	46
4	41	49
4	44	52
4	47	55

LIQUID LEVEL GAGE LG 1, 2 & 3

Courtesy of Penberthy

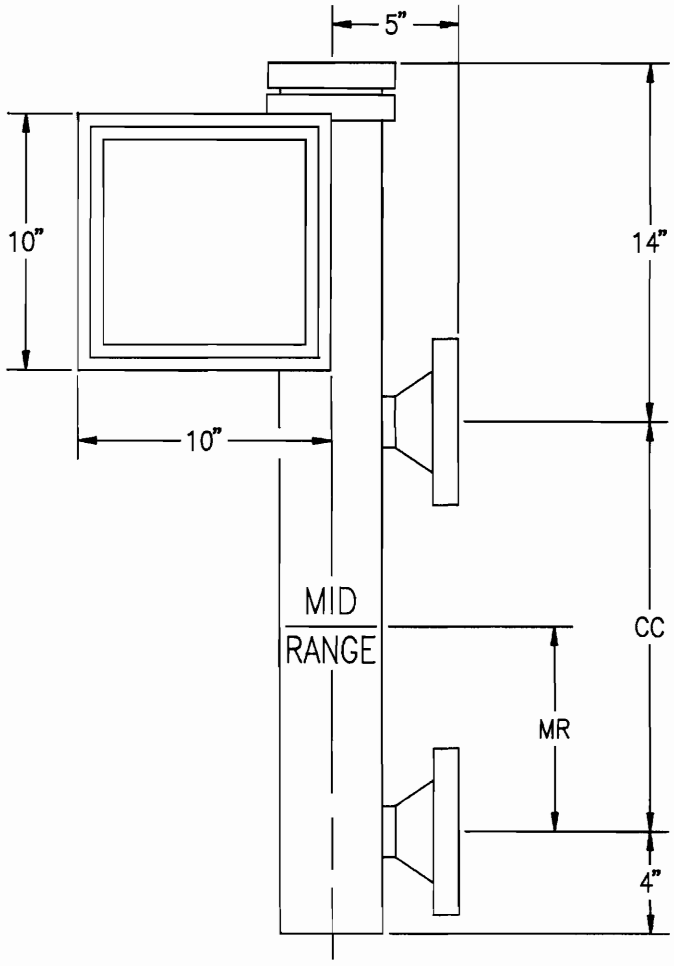

ELEVATION

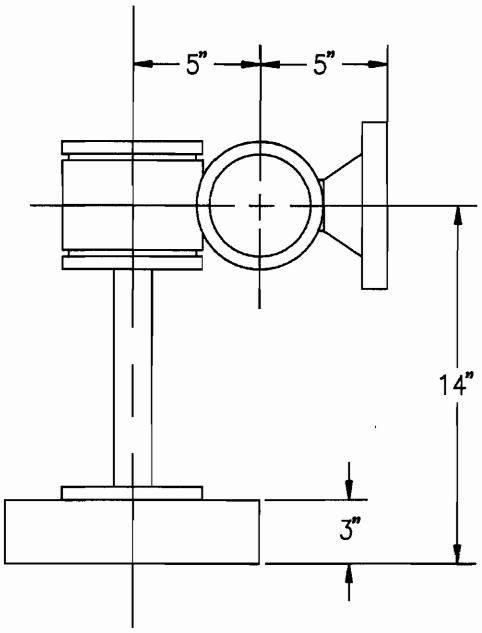

PLAN

RANGE	CC	MR
14	14	7
24	24	12
34	34	17
44	44	22
54	54	27

LEVEL CONTROLLER LC 1 & 2

Courtesy of Penberthy

LINEAR CONVERSION

Fractions of an Inch To Decimals of an Inch and to Millimeters

Fraction	Decimal	Millimeter
1/64	.015625	0.39688
1/32	.03125	0.79375
3/64	.046875	1.19063
1/16	.0625	1.58750
5/64	.078125	1.98438
3/32	.09375	2.38125
7/64	.109375	2.77813
1/8	.125	3.17501
9/64	.140625	3.57188
5/32	.15625	3.96876
11/64	.171875	4.36563
3/16	.1875	4.76251
13/64	.203125	5.15939
7/32	.21875	5.55626
15/64	.234375	5.95314
1/4	.25	6.35001
17/64	.265625	6.74689
9/32	.28125	7.14376
19/64	.296875	7.54064
5/16	.3125	7.93752
21/64	.328125	8.33439
11/32	.34375	8.73127
23/64	.359375	9.12814
3/8	.375	9.52502
25/64	.390625	9.92189
13/32	.40625	10.31877
27/64	.421875	10.71565
7/16	.4375	11.11252
29/64	.453125	11.50940
15/32	.46875	11.90627
31/64	.484375	12.30315
1/2	.5	12.70002
33/64	.515625	13.09690
17/32	.53125	13.49378
35/64	.546875	13.89065
9/16	.5625	14.28753
37/64	.578125	14.68440
19/32	.59375	15.08128
39/64	.609375	15.47816
5/8	.625	15.87503
41/64	.640625	16.27191
21/32	.65625	16.66878
43/64	.671875	17.06566
11/16	.6875	17.46253
45/64	.703125	17.85941
23/32	.71875	18.25629
47/64	.734375	18.65316
3/4	.75	19.05004
49/64	.765625	19.44691
25/32	.78125	19.84379
51/64	.796875	20.24066
13/16	.8125	20.63754
53/64	.828125	21.03442
27/32	.84375	21.43129
55/64	.859375	21.82817
7/8	.875	22.22504
57/64	.890625	22.62192
29/32	.90625	23.01880
59/64	.921875	23.41567
15/16	.9375	23.81255
61/64	.953125	24.20942
31/32	.96875	24.60630
63/64	.984375	25.00317
1	1.0	25.40005

Courtesy of Crane Co.

LINEAR CONVERSION

Inches to Millimeters

(1 inch = 25.4 millimeters)

In.	0	1/16	1/8	3/16	1/4	5/16	3/8	7/16	1/2	9/16	5/8	11/16	3/4	13/16	7/8	15/16
0	0.0	1.6	3.2	4.8	6.4	7.9	9.5	11.1	12.7	14.3	15.9	17.5	19.1	20.6	22.2	23.8
1	25.4	27.0	28.6	30.2	31.8	33.3	34.9	36.5	38.1	39.7	41.3	42.9	44.5	46.0	47.6	49.2
2	50.8	52.4	54.0	55.6	57.2	58.7	60.3	61.9	63.5	65.1	66.7	68.3	69.9	71.4	73.0	74.6
3	76.2	77.8	79.4	81.0	82.6	84.1	85.7	87.3	88.9	90.5	92.1	93.7	95.3	96.8	98.4	100.0
4	101.6	103.2	104.8	106.4	108.0	109.5	111.1	112.7	114.3	115.9	117.5	119.1	120.7	122.2	123.8	125.4
5	127.0	128.6	130.2	131.8	133.4	134.9	136.5	138.1	139.7	141.3	142.9	144.5	146.1	147.6	149.2	150.8
6	152.4	154.0	155.6	157.2	158.8	160.3	161.9	163.5	165.1	166.7	168.3	169.9	171.5	173.0	174.6	176.2
7	177.8	179.4	181.0	182.6	184.2	185.7	187.3	188.9	190.5	192.1	193.7	195.3	196.9	198.4	200.0	201.6
8	203.2	204.8	206.4	208.0	209.6	211.1	212.7	214.3	215.9	217.5	219.1	220.7	222.3	223.8	225.4	227.0
9	228.6	230.2	231.8	233.4	235.0	236.5	238.1	239.7	241.3	242.9	244.5	246.1	247.7	249.2	250.8	252.4
10	254.0	255.6	257.2	258.8	260.4	261.9	263.5	265.1	266.7	268.3	269.9	271.5	273.1	274.6	276.2	277.8
11	279.4	281.0	282.6	284.2	285.8	287.3	288.9	290.5	292.1	293.7	295.3	296.9	298.5	300.0	301.6	303.2
12	304.8	306.4	308.0	309.6	311.2	312.7	314.3	315.9	317.5	319.1	320.7	322.3	323.9	325.4	327.0	328.6
13	330.2	331.8	333.4	335.0	336.6	338.1	339.7	341.3	342.9	344.5	346.1	347.7	349.3	350.8	352.4	354.0
14	355.6	357.2	358.8	360.4	362.0	363.5	365.1	366.7	368.3	369.9	371.5	373.1	374.7	376.2	377.8	379.4
15	381.0	382.6	384.2	385.8	387.4	388.9	390.5	392.1	393.7	395.3	396.9	398.5	400.1	401.6	403.2	404.8
16	406.4	408.0	409.6	411.2	412.8	414.3	415.9	417.5	419.1	420.7	422.3	423.9	425.5	427.0	428.6	430.2
17	431.8	433.4	435.0	436.6	438.2	439.7	441.3	442.9	444.5	446.1	447.7	449.3	450.9	452.4	454.0	455.6
18	457.2	458.8	460.4	462.0	463.6	465.1	466.7	468.3	469.9	471.5	473.1	474.7	476.3	477.8	479.4	481.0
19	482.6	484.2	485.8	487.4	489.0	490.5	492.1	493.7	495.3	496.9	498.5	500.1	501.7	503.2	504.8	506.4
20	508.0	509.6	511.2	512.8	514.4	515.9	517.5	519.1	520.7	522.3	523.9	525.5	527.1	528.6	530.2	531.8
21	533.4	535.0	536.6	538.2	539.8	541.3	542.9	544.5	546.1	547.7	549.3	550.9	552.5	554.0	555.6	557.2
22	558.8	560.4	562.0	563.6	565.2	566.7	568.3	569.9	571.5	573.1	574.7	576.3	577.9	579.4	581.0	582.6
23	584.2	585.8	587.4	589.0	590.6	592.1	593.7	595.3	596.9	598.5	600.1	601.7	603.3	604.8	606.4	608.0
24	609.6	611.2	612.8	614.4	616.0	617.5	619.1	620.7	622.3	623.9	625.5	627.1	628.7	630.2	631.8	633.4
25	635.0	636.6	638.2	639.8	641.4	642.9	644.5	646.1	647.7	649.3	650.9	652.5	654.1	655.6	657.2	658.8
26	660.4	662.0	663.6	665.2	666.8	668.3	669.9	671.5	673.1	674.7	676.3	677.9	679.5	681.0	682.6	684.2
27	685.8	687.4	689.0	690.6	692.2	693.7	695.3	696.9	698.5	700.1	701.7	703.3	704.9	706.4	708.0	709.6
28	711.2	712.8	714.4	716.0	717.6	719.1	720.7	722.3	723.9	725.5	727.1	728.7	730.3	731.8	733.4	735.0
29	736.6	738.2	739.8	714.4	743.0	744.5	746.1	747.7	749.3	750.9	752.5	754.1	755.7	757.2	758.8	760.4
30	762.0	763.6	765.2	766.8	768.4	769.9	771.5	773.1	774.7	776.3	777.9	779.5	781.1	782.6	784.2	785.8
31	787.4	789.0	790.6	792.2	793.8	795.3	796.9	798.5	800.1	801.7	803.3	804.9	806.5	808.0	809.6	811.2
32	812.8	814.4	816.0	817.6	819.2	820.7	822.3	823.9	825.5	827.1	828.7	830.3	831.9	833.4	835.0	836.6
33	838.2	839.8	841.4	843.0	844.6	846.1	847.7	849.3	850.9	852.5	854.1	855.7	857.3	858.8	860.4	862.0
34	863.6	865.2	866.8	868.4	870.0	871.5	873.1	874.7	876.3	877.9	879.5	881.1	882.7	884.2	885.8	887.4
35	889.0	890.6	892.2	893.8	895.4	896.9	898.5	900.1	901.7	903.3	904.9	906.5	908.1	909.6	911.2	912.8
36	914.4	916.0	917.6	919.2	920.8	922.3	923.9	925.5	927.1	928.7	930.3	931.9	933.5	935.0	936.6	938.2
37	939.8	941.4	943.0	944.6	946.2	947.7	949.3	950.9	952.5	954.1	955.7	957.3	958.9	960.4	962.0	963.6
38	965.2	966.8	968.4	970.0	971.6	973.1	974.7	976.3	977.9	979.5	981.1	982.7	984.3	985.8	987.4	989.0
39	990.6	992.2	993.8	995.4	997.0	998.5	1000.1	1001.7	1003.3	1004.9	1006.5	1008.1	1009.7	1011.2	1012.8	1014.4
40	1016.0	1017.6	1019.2	1020.8	1022.4	1023.9	1025.5	1027.1	1028.7	1030.3	1031.9	1033.5	1035.1	1036.6	1038.2	1039.8
41	1041.4	1043.0	1044.6	1046.2	1047.8	1049.3	1050.9	1052.5	1054.1	1055.7	1057.3	1058.9	1060.5	1062.0	1063.6	1065.2
42	1066.8	1068.4	1070.0	1071.6	1073.2	1074.7	1076.3	1077.9	1079.5	1081.1	1082.7	1084.3	1085.9	1087.4	1089.0	1090.6
43	1092.2	1093.8	1095.4	1097.0	1098.6	1100.1	1101.7	1103.3	1104.9	1106.5	1108.1	1109.7	1111.3	1112.8	1114.4	1116.0
44	1117.6	1119.2	1120.8	1122.4	1124.0	1125.5	1127.1	1128.7	1130.3	1131.9	1133.5	1135.1	1136.7	1138.2	1139.8	1141.4
45	1143.0	1144.6	1146.2	1147.8	1149.4	1150.9	1152.5	1154.1	1155.7	1157.3	1158.9	1160.5	1162.1	1163.6	1165.2	1166.8
46	1168.4	1170.0	1171.6	1173.2	1174.8	1176.3	1177.9	1179.5	1181.1	1182.7	1184.3	1185.9	1187.5	1189.0	1190.6	1192.2
47	1193.8	1195.4	1197.0	1198.6	1200.2	1201.7	1203.3	1204.9	1206.5	1208.1	1209.7	1211.3	1212.9	1214.4	1216.0	1217.6
48	1219.2	1220.8	1222.4	1224.0	1225.6	1227.1	1228.7	1230.3	1231.9	1233.5	1235.1	1236.7	1238.3	1239.8	1241.4	1243.0
49	1244.6	1246.2	1247.8	1249.4	1251.0	1252.5	1254.1	1255.7	1257.3	1258.9	1260.5	1262.1	1263.7	1265.2	1266.8	1268.4
50	1270.0	1271.6	1273.2	1274.8	1276.4	1277.9	1279.5	1281.1	1282.7	1284.3	1285.9	1287.5	1289.1	1290.6	1292.2	1293.8

Courtesy of Crane Co.

LINEAR CONVERSION

Decimals of an Inch to Millimeters

(0.10 inch = 2.54 millimeters)

Inches	0.00	.01	.02	.03	.04	.05	.06	.07	.08	.09	Inches
0.00	0.00	0.25	0.51	0.76	1.02	1.27	1.52	1.78	2.03	2.29	0.00
.10	2.54	2.79	3.05	3.30	3.56	3.81	4.06	4.32	4.57	4.83	.10
.20	5.08	5.33	5.59	5.84	6.10	6.35	6.60	6.86	7.11	7.37	.20
.30	7.62	7.87	8.13	8.38	8.64	8.89	9.14	9.40	9.65	9.91	.30
.40	10.16	10.41	10.67	10.92	11.18	11.43	11.68	11.94	12.19	12.45	.40
.50	12.70	12.95	13.21	13.46	13.72	13.97	14.22	14.48	14.73	14.99	.50
.60	15.24	15.49	15.75	16.00	16.26	16.51	16.76	17.02	17.27	17.53	.60
.70	17.78	18.03	18.29	18.54	18.80	19.05	19.30	19.56	19.81	20.07	.70
.80	20.32	20.57	20.83	21.08	21.34	21.59	21.84	22.10	22.35	22.61	.80
.90	22.86	23.11	23.37	23.62	23.88	24.13	24.38	24.64	24.89	25.15	.90

Millimeters to Inches

(1 millimeter = 0.03937 inch)

Millimeters	0	1	2	3	4	5	6	7	8	9	Millimeters
0	0.00	0.039	0.079	0.118	0.157	0.197	0.236	0.276	0.315	0.354	0
10	0.39	0.43	0.47	0.51	0.55	0.59	0.63	0.67	0.71	0.75	10
20	0.79	0.83	0.87	0.91	0.94	0.98	1.02	1.06	1.10	1.14	20
30	1.18	1.22	1.26	1.30	1.34	1.38	1.42	1.46	1.50	1.54	30
40	1.57	1.61	1.65	1.69	1.73	1.77	1.81	1.85	1.89	1.93	40
50	1.97	2.01	2.05	2.09	2.13	2.17	2.20	2.24	2.28	2.32	50
60	2.36	2.40	2.44	2.48	2.52	2.56	2.60	2.64	2.68	2.72	60
70	2.76	2.80	2.83	2.87	2.91	2.95	2.99	3.03	3.07	3.11	70
80	3.15	3.19	3.23	3.27	3.31	3.35	3.39	3.43	3.46	3.50	80
90	3.54	3.58	3.62	3.66	3.70	3.74	3.78	3.82	3.86	3.90	90
100	3.94	3.98	4.02	4.06	4.09	4.13	4.17	4.21	4.25	4.29	100
110	4.33	4.37	4.41	4.45	4.49	4.53	4.57	4.61	4.65	4.69	110
120	4.72	4.76	4.80	4.84	4.88	4.92	4.96	5.00	5.04	5.08	120
130	5.12	5.16	5.20	5.24	5.28	5.31	5.35	5.39	5.43	5.47	130
140	5.51	5.55	5.59	5.63	5.67	5.71	5.75	5.79	5.83	5.87	140
150	5.91	5.94	5.98	6.02	6.06	6.10	6.14	6.18	6.22	6.26	150
160	6.30	6.34	6.38	6.42	6.46	6.50	6.54	6.57	6.61	6.65	160
170	6.69	6.73	6.77	6.81	6.85	6.89	6.93	6.97	7.01	7.05	170
180	7.09	7.13	7.17	7.20	7.24	7.28	7.32	7.36	7.40	7.44	180
190	7.48	7.52	7.56	7.60	7.64	7.68	7.72	7.76	7.80	7.83	190
200	7.87	7.91	7.95	7.99	8.03	8.07	8.11	8.15	8.19	8.23	200
210	8.27	8.31	8.35	8.39	8.43	8.46	8.50	8.54	8.58	8.62	210
220	8.66	8.70	8.74	8.78	8.82	8.86	8.90	8.94	8.98	9.02	220
230	9.06	9.09	9.13	9.17	9.21	9.25	9.29	9.33	9.37	9.41	230
240	9.45	9.49	9.53	9.57	9.61	9.65	9.69	9.72	9.76	9.80	240
250	9.84	9.88	9.92	9.96	10.00	10.04	10.08	10.12	10.16	10.20	250
260	10.24	10.28	10.31	10.35	10.39	10.43	10.47	10.51	10.55	10.59	260
270	10.63	10.67	10.71	10.75	10.79	10.83	10.87	10.91	10.94	10.98	270
280	11.02	11.06	11.10	11.14	11.18	11.22	11.26	11.30	11.34	11.38	280
290	11.42	11.46	11.50	11.54	11.57	11.61	11.65	11.69	11.73	11.77	290
300	11.81	11.85	11.89	11.93	11.97	12.01	12.05	12.09	12.13	12.17	300
310	12.20	12.24	12.28	12.32	12.36	12.40	12.44	12.48	12.52	12.56	310
320	12.60	12.64	12.68	12.72	12.76	12.80	12.83	12.87	12.91	12.95	320
330	12.99	13.03	13.07	13.11	13.15	13.19	13.23	13.27	13.31	13.35	330
340	13.39	13.43	13.46	13.50	13.54	13.58	13.62	13.66	13.70	13.74	340
350	13.78	13.82	13.86	13.90	13.94	13.98	14.02	14.06	14.09	14.13	350
360	14.17	14.21	14.25	14.29	14.33	14.37	14.41	14.45	14.49	14.53	360
370	14.57	14.61	14.65	14.69	14.72	14.76	14.80	14.84	14.88	14.92	370
380	14.96	15.00	15.04	15.08	15.12	15.16	15.20	15.24	15.28	15.31	380
390	15.35	15.39	15.43	15.47	15.51	15.55	15.59	15.63	15.67	15.71	390

(continued on next page)

Courtesy of Crane Co.

LINEAR CONVERSION
Millimeters to inches—cont.

Millimeters	0	1	2	3	4	5	6	7	8	9	Millimeters
400	15.75	15.79	15.83	15.87	15.91	15.94	15.98	16.02	16.06	16.10	400
410	16.14	16.18	16.22	16.26	16.30	16.34	16.38	16.42	16.46	16.50	410
420	16.54	16.57	16.61	16.65	16.69	16.73	16.77	16.81	16.85	16.89	420
430	16.93	16.97	17.01	17.05	17.09	17.13	17.17	17.20	17.24	17.28	430
440	17.32	17.36	17.40	17.44	17.48	17.52	17.56	17.60	17.64	17.68	440
450	17.72	17.76	17.80	17.83	17.87	17.91	17.95	17.99	18.03	18.07	450
460	18.11	18.15	18.19	18.23	18.27	18.31	18.35	18.39	18.43	18.46	460
470	18.50	18.54	18.58	18.62	18.66	18.70	18.74	18.78	18.82	18.86	470
480	18.90	18.94	18.98	19.02	19.06	19.09	19.13	19.17	19.21	19.25	480
490	19.29	19.33	19.37	19.41	19.45	19.49	19.53	19.57	19.61	19.65	490
500	19.69	19.72	19.76	19.80	19.84	19.88	19.92	19.96	20.00	20.04	500
510	20.08	20.12	20.16	20.20	20.24	20.28	20.31	20.35	20.39	20.43	510
520	20.47	20.51	20.55	20.59	20.63	20.67	20.71	20.75	20.79	20.83	520
530	20.87	20.91	20.94	20.98	21.02	21.06	21.10	21.14	21.18	21.22	530
540	21.26	21.30	21.34	21.38	21.42	21.46	21.50	21.54	21.58	21.61	540
550	21.65	21.69	21.73	21.77	21.81	21.85	21.89	21.93	21.97	22.01	550
560	22.05	22.09	22.13	22.17	22.20	22.24	22.28	22.32	22.36	22.40	560
570	22.44	22.48	22.52	22.56	22.60	22.64	22.68	22.72	22.76	22.80	570
580	22.83	22.87	22.91	22.95	22.99	23.03	23.07	23.11	23.15	23.19	580
590	23.23	23.27	23.31	23.35	23.39	23.43	23.46	23.50	23.54	23.58	590
600	23.62	23.66	23.70	23.74	23.78	23.82	23.86	23.90	23.94	23.98	600
610	24.02	24.06	24.09	24.13	24.17	24.21	24.25	24.29	24.33	24.37	610
620	24.41	24.45	24.49	24.53	24.57	24.61	24.65	24.68	24.72	24.76	620
630	24.80	24.84	24.88	24.92	24.96	25.00	25.04	25.08	25.12	25.16	630
640	25.20	25.24	25.28	25.31	25.35	25.39	25.43	25.47	25.51	25.55	640
650	25.59	25.63	25.67	25.71	25.75	25.79	25.83	25.87	25.91	25.94	650
660	25.98	26.02	26.06	26.10	26.14	26.18	26.22	26.26	26.30	26.34	660
670	26.38	26.42	26.46	26.50	26.54	26.57	26.61	26.65	26.69	26.73	670
680	26.77	26.81	26.85	26.89	26.93	26.97	27.01	27.05	27.09	27.13	680
690	27.17	27.20	27.24	27.28	27.32	27.36	27.40	27.44	27.48	27.52	690
700	27.56	27.60	27.64	27.68	27.72	27.76	27.80	27.83	27.87	27.91	700
710	27.95	27.99	28.03	28.07	28.11	28.15	28.19	28.23	28.27	28.31	710
720	28.35	28.39	28.43	28.46	28.50	28.54	28.58	28.62	28.66	28.70	720
730	28.74	28.78	28.82	28.86	28.90	28.94	28.98	29.02	29.06	29.09	730
740	29.13	29.17	29.21	29.25	29.29	29.33	29.37	29.41	29.45	29.49	740
750	29.53	29.57	29.61	29.65	29.68	29.72	29.76	29.80	29.84	29.88	750
760	29.92	29.96	30.00	30.04	30.08	30.12	30.16	30.20	30.24	30.28	760
770	30.31	30.35	30.39	30.43	30.47	30.51	30.55	30.59	30.63	30.67	770
780	30.71	30.75	30.79	30.83	30.87	30.91	30.94	30.98	31.02	31.06	780
790	31.10	31.14	31.18	31.22	31.26	31.30	31.34	31.38	31.42	31.46	790
800	31.50	31.54	31.57	31.61	31.65	31.69	31.73	31.77	31.81	31.85	800
810	31.89	31.93	31.97	32.01	32.05	32.09	32.13	32.17	32.20	32.24	810
820	32.28	32.32	32.36	32.40	32.44	32.48	32.52	32.56	32.60	32.64	820
830	32.68	32.72	32.76	32.80	32.83	32.87	32.91	32.95	32.99	33.03	830
840	33.07	33.11	33.15	33.19	33.23	33.27	33.31	33.35	33.39	33.43	840
850	33.46	33.50	33.54	33.58	33.62	33.66	33.70	33.74	33.78	33.82	850
860	33.86	33.90	33.94	33.98	34.02	34.06	34.09	34.13	34.17	34.21	860
870	34.25	34.29	34.33	34.37	34.41	34.45	34.49	34.53	34.57	34.61	870
880	34.65	34.68	34.72	34.76	34.80	34.84	34.88	34.92	34.96	35.00	880
890	35.04	35.08	35.12	35.16	35.20	35.24	35.28	35.31	35.35	35.39	890
900	35.43	35.47	35.51	35.55	35.59	35.63	35.67	35.71	35.75	35.79	900
910	35.83	35.87	35.91	35.94	35.98	36.02	36.06	36.10	36.14	36.18	910
920	36.22	36.26	36.30	36.34	36.38	36.42	36.46	36.50	36.54	36.57	920
930	36.61	36.65	36.69	36.73	36.77	36.81	36.85	36.89	36.93	36.97	930
940	37.01	37.05	37.09	37.13	37.17	37.20	37.24	37.28	37.32	37.36	940
950	37.40	37.44	37.48	37.52	37.56	37.60	37.64	37.68	37.72	37.76	950
960	37.80	37.83	37.87	37.91	37.95	37.99	38.03	38.07	38.11	38.15	960
970	38.19	38.23	38.27	38.31	38.35	38.39	38.43	38.46	38.50	38.54	970
980	38.58	38.62	38.66	38.70	38.74	38.78	38.82	38.86	38.90	38.94	980
990	38.98	39.02	39.06	39.09	39.13	39.17	39.21	39.25	39.29	39.33	990
1000	39.37	39.41	39.45	39.49	39.53	39.57	39.61	39.65	39.68	39.72	1000

Courtesy of Crane Co.

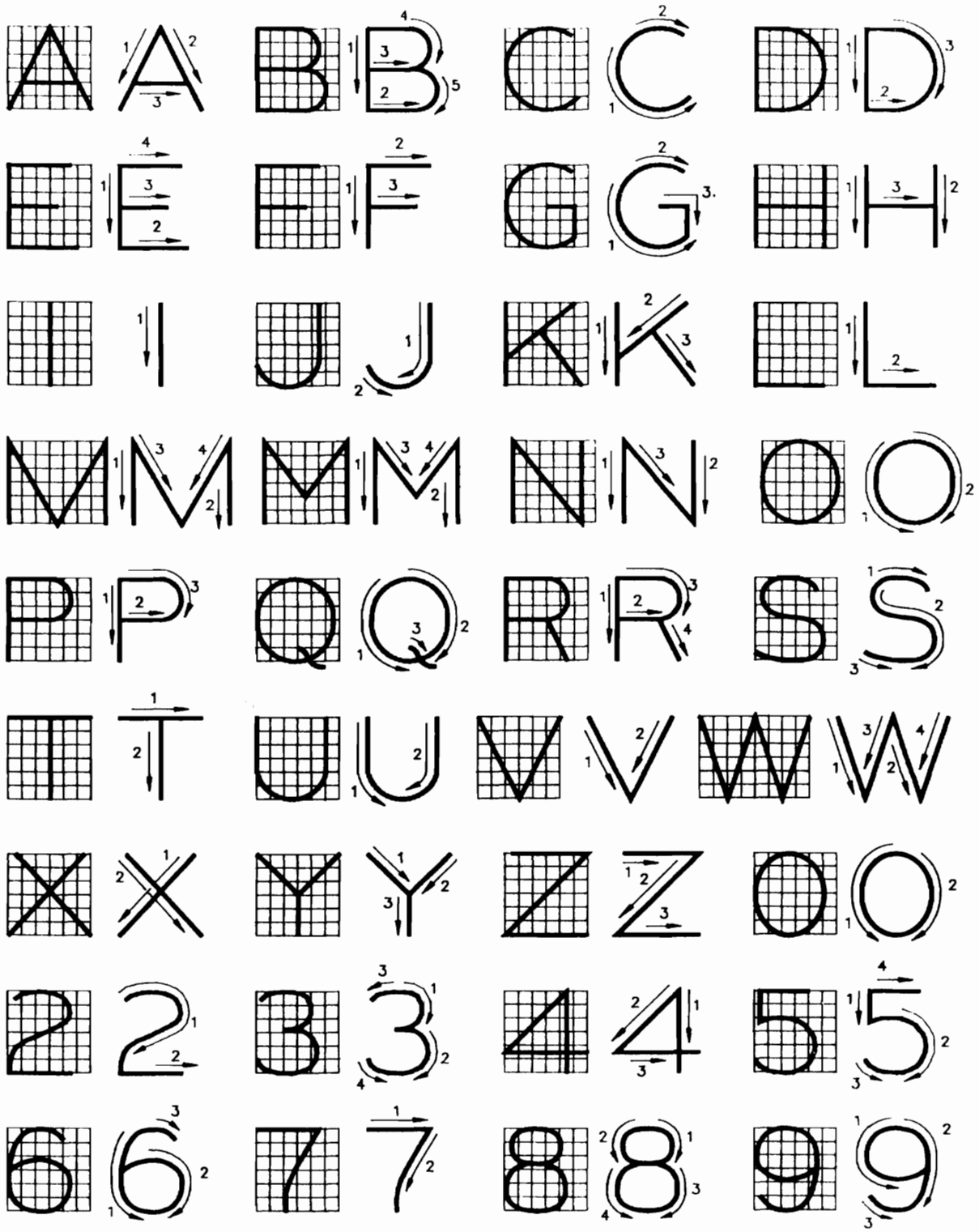

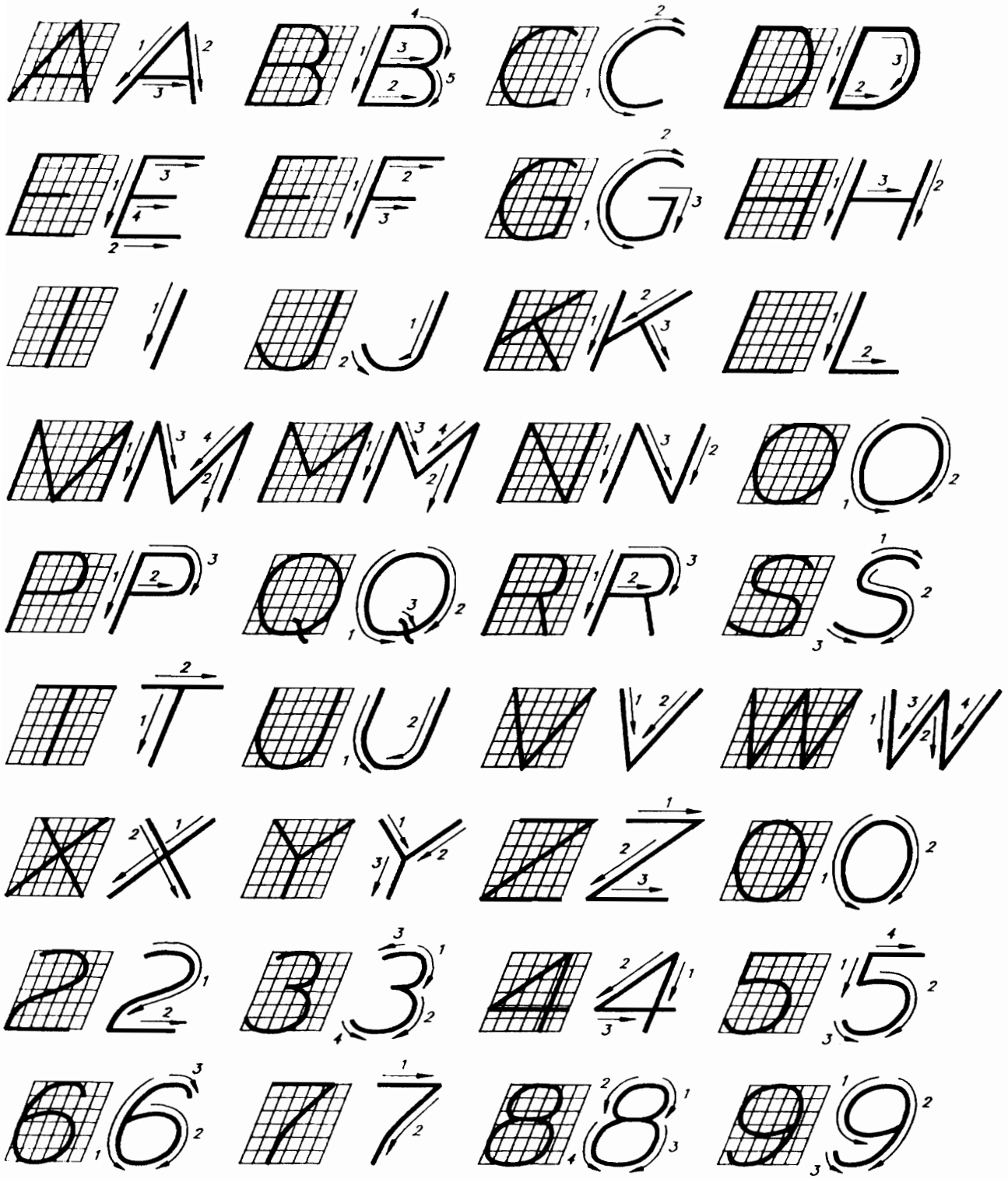

ALPHABET of LINES

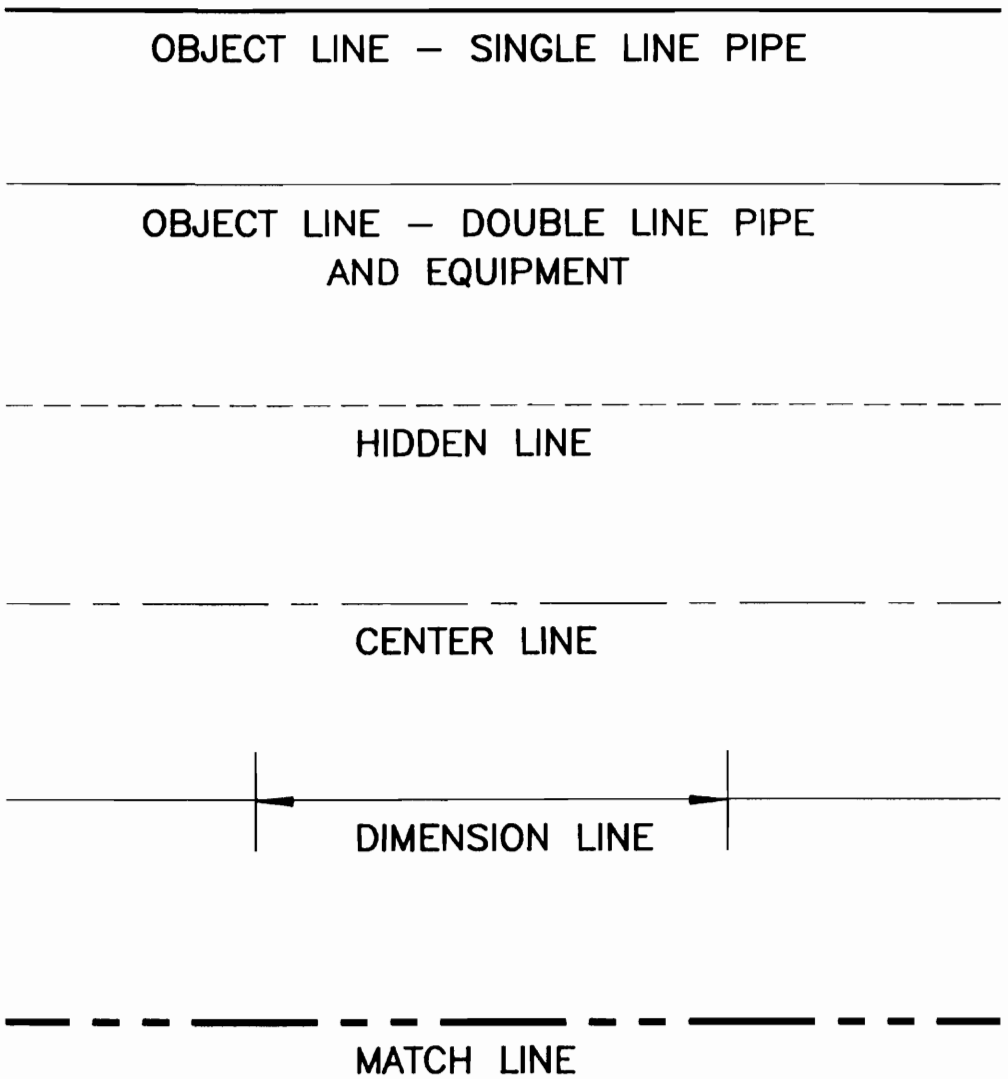

ADDITION and SUBTRACTION of FRACTIONS

$\frac{1''}{16}$

$\frac{2''}{16} = \frac{1''}{8}$

$\frac{3''}{16}$

$\frac{4''}{16} = \frac{2''}{8} = \frac{1''}{4}$

$\frac{5''}{16}$

$\frac{6''}{16} = \frac{3''}{8}$

$\frac{7''}{16}$

$\frac{8''}{16} = \frac{4''}{8} = \frac{2''}{4} = \frac{1''}{2}$

$\frac{9''}{16}$

$\frac{10''}{16} = \frac{5''}{8}$

$\frac{11''}{16}$

$\frac{12''}{16} = \frac{6''}{8} = \frac{3''}{4}$

$\frac{13''}{16}$

$\frac{14''}{16} = \frac{7''}{8}$

$\frac{15''}{16}$

$\frac{16''}{16} = \frac{8''}{8} = \frac{4''}{4} = \frac{2''}{2} = 1''$

ADDITION

(1)

$$\begin{array}{rcl} 2\frac{3''}{4} & = & 2\frac{6''}{8} \\ 4\frac{5''}{8} & = & 4\frac{5''}{8} \\ +\,3\frac{1''}{2} & = & 3\frac{4''}{8} \\ \hline & & 9\frac{15''}{8} = 10\frac{7''}{8} \end{array}$$

CHANGE FRACTIONS TO THE LEAST COMMON DENOMINATOR BEFORE ADDING

REDUCE ANSWER TO THE LOWEST TERMS

(2)

$$\begin{array}{rcl} 12\frac{3''}{16} & = & 12\frac{3''}{16} \\ 10\frac{7''}{8} & = & 10\frac{14''}{16} \\ +\,9\frac{1''}{4} & = & 9\frac{4''}{16} \\ \hline & & 31\frac{21''}{16} = 2'-8\frac{5''}{16} \end{array}$$

SUBTRACTION

(3)

$$\begin{array}{rcl} 7\frac{5''}{8} & = & 7\frac{5''}{8} \\ -\,3\frac{1''}{2} & = & 3\frac{4''}{8} \\ \hline & & 4\frac{1''}{8} \end{array} \qquad \begin{array}{rcl} 12\frac{5''}{16} & = & 12\frac{5''}{16} \\ -\,6\frac{1''}{4} & = & 6\frac{4''}{16} \\ \hline & & 6\frac{1''}{16} \end{array}$$

(4)

$$\begin{array}{rcl} 17\frac{5''}{8} & = & 17\frac{10''}{16} = \overset{16+\frac{16}{16}}{\cancel{17}}\frac{10''}{16} = 16\frac{10''}{16} + \frac{16''}{16} = \frac{26''}{16} \\ -\,11\frac{11''}{16} & = & 11\frac{11''}{16} = 11\frac{11''}{16} = 11\qquad\qquad \frac{11''}{16} \\ \hline & & 5\frac{15''}{16} \end{array}$$

(5)

$$\begin{array}{rcl} 24'-3\frac{3''}{4} & = & 24'-3\frac{6''}{8} = \overset{23+12''}{\cancel{24}}'-3\frac{6}{8} = 23'-15\frac{6}{8} \\ -17'-8\frac{3''}{8} & = & 17'-8\frac{3''}{8} = 17'-8\frac{3}{8} = 17'-8\frac{3}{8} \\ \hline & & 6'-7\frac{3''}{8} \end{array}$$

CONVERSION FROM FEET & INCHES TO DECIMALS OF A FOOT

(USING A CALCULATOR)

1 $2'-9\frac{7}{8}''$

[7] [÷] [8] [=]

[0.8750] [+] [9] [=]

[9.8750] [÷] [12] [=]

[0.8229] [+] [2] [=] [2.8229] FT.

2 $1'-0\frac{1}{4}''$

[1] [÷] [4] [=]

[0.2500] [+] [0] [=]

[0.2500] [÷] [12] [=]

[0.0208] [+] [1] [=] [1.0208] FT.

3 $1'-5\frac{9}{16}''$

[9] [÷] [16] [=]

[0.5625] [+] [5] [=]

[5.5625] [÷] [12] [=]

[0.4635] [+] [1] [=] [1.4635] FT.

4 $0'-7\frac{5}{8}''$

[5] [÷] [8] [=]

[0.6250] [+] [7] [=]

[7.6250] [÷] [12] [=]

[0.6354] [+] [0] [=] [0.6354] FT.

5 $1'-4\frac{5}{16}''$

[5] [÷] [16] [=]

[0.3125] [+] [4] [=]

[4.3125] [÷] [12] [=]

[0.3594] [+] [1] [=] [1.3594] FT.

CONVERSION FROM DECIMALS OF A FOOT TO FEET & INCHES

(USING A CALCULATOR)

1 1.3594'

1.3594	−	1	=	
0.3594	X	12	=	
4.3128	−	4	=	
0.3128	X	16	=	1'−4 5/16"

2 0.6354'

0.6354	−	0	=	
0.6354	X	12	=	
7.6248	−	7	=	
0.6248	X	16	=	0'−7 5/8"

3 2.8229'

2.8229	−	2	=	
0.8229	X	12	=	
9.8748	−	9	=	
0.8748	X	16	=	2'−9 7/8"

4 1.0208'

1.0208	−	1	=	
0.0208	X	12	=	
0.2496	−	0	=	
0.2496	X	16	=	1'−0 1/4"

5 1.4635'

1.4635	−	1	=	
0.4635	X	12	=	
5.5620	−	5	=	
0.5620	X	16	=	1'−5 9/16"

CONVERSION FROM DEGREES & SECONDS TO DECIMALS

(USING A CALCULATOR)

1 30°25'

[25] [÷] [60] [=]

[0.4167] [+] [30] [=] [30.4167]

2 30.4167°

[30.4167] [−] [30] [=]

[0.4167] [x] [60] [=] [25']

---

3 45°36'

[36] [÷] [60] [=]

[0.6000] [+] [45] [=] [45.6000]

4 45.6000°

[45.6000] [−] [45] [=]

[0.6000] [x] [60] [=] [36']

---

5 83°07'

[7] [÷] [60] [=]

[0.1167] [+] [83] [=] [83.1167]

6 83.1167°

[83.1167] [−] [83] [=]

[0.1167] [x] [60] [=] [7]

---

7 17°55'

[55] [÷] [60] [=]

[0.9167] [+] [17] [=] [17.9167]

8 17.9167°

[17.9167] [−] [17] [=]

[0.9167] [x] [60] [=] [55]

ARCHITECT'S SCALE

3/8" = 1'–0"

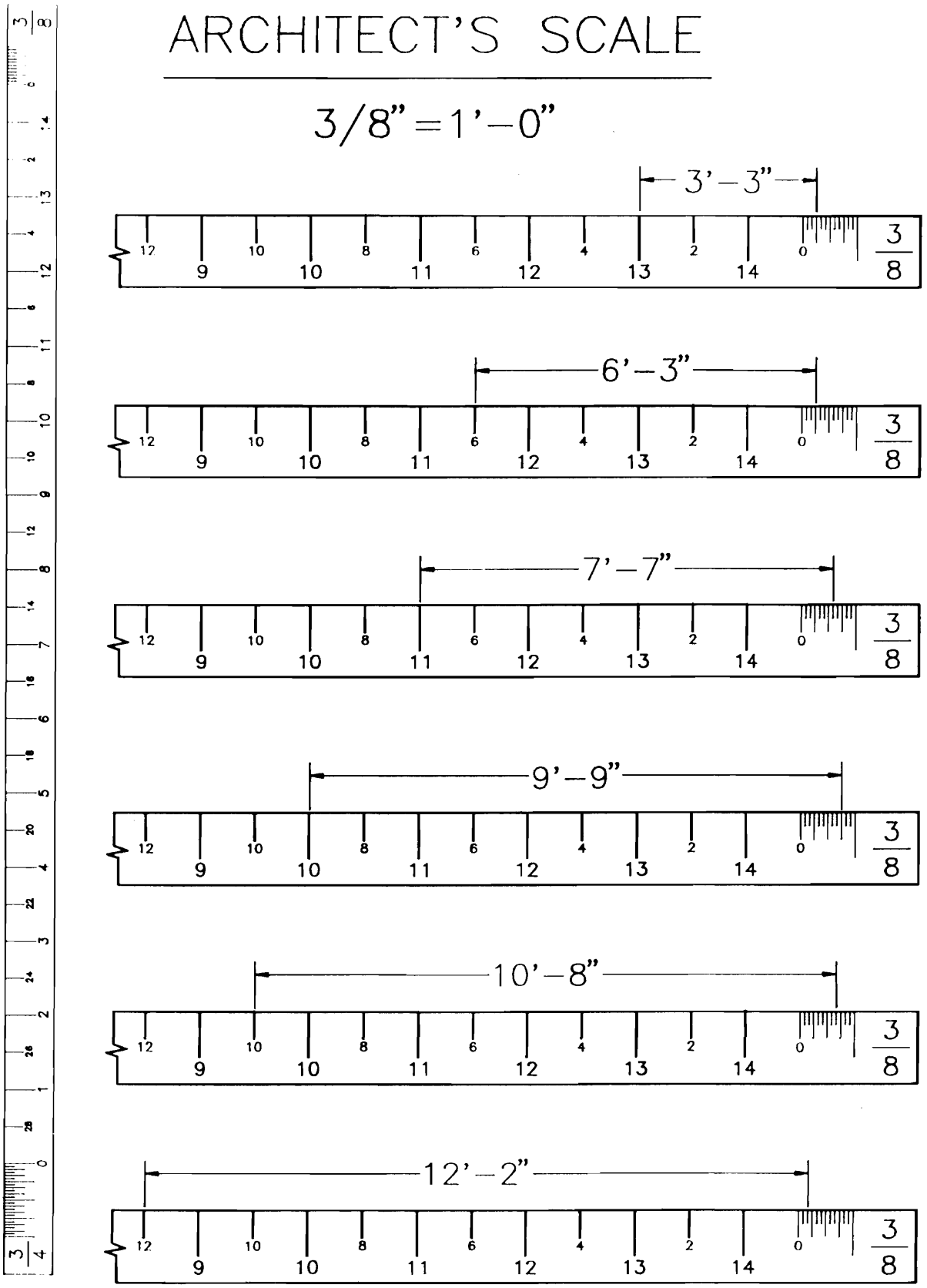

Glossary

A

Accumulator. Temporary storage tank for liquids and vapors.

Actuator. A hydraulic or pneumatic apparatus that will operate a valve by remote control.

Air, compressed. Any air with pressure greater than atmospheric pressure.

Air, instrument. Compressed air free of contaminants that is used to operate pneumatic control devices.

Air, plant. Compressed air used to drive pneumatic hand tools.

Air cooler. Large fan-type coolers placed above or below a pipe rack, which draws air across the pipes in the pipe rack to cool them.

Alarm. Signals, via lights or horn, used to indicate whether the liquid level, temperature, or pressure inside a vessel is too high or too low or whether there is no flow or reverse flow.

Anchor. Stationary support designed to restrict the movement of a pipe caused by vibration, turbulance, expansion, or other external forces.

Anchor bolts. Bolts that have been positioned in concrete prior to curring. Used to secure equipment, buildings, tanks, or other items to a concrete foundation.

Area limit. Boundary identifying the extents of the unit being drawn.

B

Back-up ring. A ⅛″ thick, washer-like, ring placed between two pieces of pipe to prevent the build-up of weld icicles inside the pipe during the welding process.

Ball valve. Valve having a ball with a hole through it that allows straight-through flow. A 90° turn of the wrench opens/closes the valves.

Base plate. Flat, metal plate welded to a vessel or other piece of equipment allowing it to be secured to a concrete foundation via anchor bolts.

Battery limit. Lines placed on a drawing to identify the perimeter limits of a unit.

Bent. One section of a piperack containing two vertical columns and one or more horizontal connecting members.

Beveled end. Any piping component having a tapered end used in butt-welding.

Billet. Near-molten, steel bar from which seamless pipe is formed.

Bill of materials. A detailed listing of components required to fabricate a run of pipe.

Blind flange. A flanged plate-like device used to terminate the end of a run of pipe, valve, or vessel opening.

Blowdown. Commodity discharged from a relief valve.

Boiler. Vessel used to convert water into super-heated steam.

Box heater. Vessel used to raise the temperature of a feed before it begins fractional distillation. *See* vertical heater.

Branch. A connecting tie-in of the same or smaller pipe size.

Briddle. A screwed or socket-weld piping configuration containing instruments that measure the liquid level in horizontal or vertical vessels.

Bubble caps. Small valve-like controls on a tray in a fractionating column that allow rising vapors to pass through.

Butt-weld. Weld made when two beveled ends are butted together and welded.

Bypass valve. Valve connecting the upstream and downstream sides of a control set that allows the control valve to be removed for repair or replacement.

By-product. Liquid fraction of raw crude.

C

Cage. Metal enclosure surrounding a ladder providing worker safety.

Cap. Butt-weld fitting used to close the end of a pipe run.

Carbon steel. Chief manufacturing material of pipe and fittings used in industrial piping applications.

Catalyst. Compound used to induce a chemical reaction.

Centrifugal. "Center-fleeing" action caused by a spinning impeller.

Charge. The initial feed used in a fractional distillation process.

Check valve. Valve used to prevent backflow.

Chemical plant. Facility that converts semi-refined products into usable consumer products.

Codes. A collection of regulations and procedures for design, construction, and operation of a facility.

Coefficient of expansion. The numerical factor of expansion/contraction of a substance based on a change in temperature.

Column. *See* fractionation column. Also, a vertical steel or concrete member that supports structures, piperacks, buildings, etc.

Companion flange. Mating flange of the same size and pound rating as the nozzle, valve, or fitting to which it is bolted.

Compressor. Mechanical device used to compress gases or vapors.

Concentric. Reducer or swage having a common centerline.

Condensate. The liquid that has been removed from a gas or vapor.

Condenser. Mechanical apparatus that cools a gas or vapor to the point of condensing.

Conduit. Protective covering around electrical wires and cables.

Control building. Building from which monitoring and operation of remotely installed instruments are made.

Control panel. A cabinet or desk-type housing containing monitoring instruments.

Control station. A U-shaped series of valves and fittings that allows for the monitoring, control, and regulation of flow or pressure through a piping system.

Control valve. Typically having a globe valve body, this valve provides a method to automatically and remotely control the fluid flow and pressure through a pipe.

Controller. A device used to maintain a specified liquid level, temperature, or flow inside a vessel or piping system.

Cooler. Mechanical apparatus used to reduce the temperature of a liquid commodity.

Cooling tower. A mechanical device that dissipates heat by evaporation of water sprayed into a forced-air tower.

Cooling water. Water used in any cooling process that will lower the temperature of a commodity.

Coordinates. Intersecting north-south and east-west lines used to position foundations, equipment, supports, buildings, etc., on a drawing.

Corrosion. The dissolving of surface material by chemical reaction.

Corrosion allowance. The amount of surface material allowed to be eroded by the commodity within a pipe while permitting the pipe to remain usable for the particular service for which it was installed.

Coupling. Fitting used to join two lengths of screwed pipe together. Also used as a branch connection on pipe or a nozzle connection on equipment.

Crude oil. The natural state of unrefined oil product. Primary source of fractionated hydrocarbon by-products.

D

Davit. Crane-like device made of steel pipe or structural steel that allows replacement parts, tools, and small machinary to be raised and lowered from the tops of vertical vessels.

Diameter, inside. The circumference measured around the interior wall of a pipe.

Diameter, nominal. The name given to a particular size of pipe.

Diameter, outside. The circumference measured around the outer wall of a pipe.

Dike. Typically an earthen dam or wall surrounding tanks creating a containment area in case of accidental discharge or rupture.

Discharge. Outgoing flow, typically with increased pressure as in the case of pumps or compressors.

Distillation. The process of extracting and separating molecular compounds from a supply product.

Double extra strong. Catagory of thick-walled pipe.

Double line. Drawings used to represent piping systems 14″ in diameter and larger.

Double pipe exchanger. Exchanger having a small diameter pipe inserted into a large diameter pipe.

Double random length. Length of manufactured pipe, typically 35′ to 40′ long.

Downcomer. Opening adjacent to a tray that allows overflowing liquids to fall to the tray below and begin refractionation.

Drain. Typically an underground piping system that transfers water runoff or waste materials to a processing facility for disposal or treatment. *See* O.W.S.

Drain funnel. Often a reducer fitting placed at the opening of a drainage pipe that aids in the collection of disposable materials.

Drift. The amount of water lost during the aeration and evaporation sequence in a cooling tower.

Dummy leg. A length of pipe or structural steel welded to the outside of a pipe that provides support for the line.

E

Eccentric. Reducer or swage having offset centerlines.

Elbow. Fitting used to make changes in direction of pipe line.

Elbow, long radius. Ninety degree elbow having a radius equal to one and one-half times the pipe's nominal size.

Elbow, short radius. Ninety degree elbow having a radius equal to the pipe's nominal size.

Electric traced. Electric leads coiled around a pipe to maintain a desired temperature.

Elevation. Sectional view of a facility showing vertical height dimensions.

Extra strong. Pipe and fittings having measurements equivalent to schedule 80.

F

Face. The mating surface of flanged fittings or valves.

Face-to-face. Measurement from the mating surface on one end of a flanged valve to the mating surface on the other end.

Feed. The initial fluid material used in the fractional distillation process.

Feed, boiler. Water piped through a boiler to produce steam.

Female thread. Internal thread grooves cut into pipes, fittings, or valves.

Field pipe. A run of pipe configured, cut, and pieced together at the time of installation.

Filter. Basket-type strainer used to collect solid waste and contaminants circulating through the piping system.

Fin-fan. *See* air cooler.

Fired heater. Mechanical device used to elevate circulating liquids to extreme temperatures.

Fire proofing. Generally brick, concrete, or gunite, applied around vessel skirts or structural columns to prevent damage in case of fire.

Fitting. Generic name for components used to make turns, branches, or reductions in a run of pipe.

Flange. Ring-shaped device that is welded or screwed on the end of a pipe that permits the pipe to be attached to other similiarly prepared piping components.

Flare stack. Vertical column that uses an open flame to burn waste gases.

Flash zone. The position in a fractionation column where the incoming feed separates into vapor and liquid states.

Flat face. Flange facing that has no raised surfaces.

Floating roof. The type of storage tank roof that is suspended by the commodity being stored. The floating prevents the collection of harmful gases and vapors in tanks that store flammable liquids.

Flow diagram. Schematic drawing depicting the equipment, piping, and instrumentation of a piping facility.

Flow displacement meter. Instrument installed within a piping configuration that measures the flow rate of the commodity within the pipe.

Flow element. Set of orifice flanges used with test equipment that measures rates.

Flow indicator. A local or board mounted instrument that registers flow rates.

Flow meter. A device used to indicate or record the amount of commodity flowing through a pipe.

Flow rate. The amount of flow passing a given point in a pipe for a predetermined amount of time, for example, gph, gpm.

Flow ratio recording controller. A combination of control valve and recorder that records the flow within a pipe then controls the flow as required.

Flow recorder. Instrument that makes a permanent record of flow measurement.

Flow recording controller. A control valve that records measurements of flow through a pipe.

Foundation. Grade-level concrete support for buildings, equipment, and structural members.

Foundation location plan. Plan drawing depicting the coordinate location of buildings, equipment, and structural concrete supports.

Fraction. By-products of a feed supply.

Fractional distillation. The chemical process of separating a feed supply into its various molecular components (by-products).

Fractionation column. A vertical vessel having internal plates, called trays, which aid in the separation and collection of the various molecular compounds of a feed stock (fractional distillation).

Fuel oil. Combustible material used as a heat source for fired equipment in a process facility.

G

G-fin. A U-shaped exchanger having a pipe within a pipe. Also known as a "hair pin" or "double pipe" exchanger.

Gas. The physical state of matter having the ability to diffuse readily and distribute uniformly throughout the container to which it is confined.

Gasket. Any of a wide variety of materials placed between mating surfaces to prevent leaks.

Gate valve. Valve designed for on or off control of a commodity flowing through a pipe.

Gauge. Instruments that measure the liquid level inside a vessel or the temperature and/or pressure in a piping system.

Globe valve. Valve designed to allow for the throttling of commodities flowing through a pipe.

Grade. The true or predetermined elevation of the ground-supported surface of a piping facility.

Grade beam. Structural member used to support grating or other flooring material at ground (grade) level.

Gravity flow system. Piping system constructed of sloped pipes that uses gravity as a means of moving the commodity inside.

Grout. A concrete mixture poured on the tops of equipment foundations to provided final leveling.

Guide. Type of pipe support that permits longitudinal but not lateral movement.

H

Hand rail. Protective railing around platforms. Typically 3′-0″ tall.

Hanger. Pipe support used on horizontal pipes that will suspend the pipe from a stationary object from above.

Head. The end enclosure of a vessel.

Header. The main run of pipe from which branches are connected.

Headroom. Vertical measurement that provides overhead clearances.

Heater. Piping equipment that uses a combustible material to increase the temperature of a commodity.

Heat exchanger. Piping equipment used to transfer heat from one fluid source to another without the two fluids mixing together.

Hydrocarbon. Any solid, liquid, or gaseous compound whose molecular structure is made exclusively of hydrogen and carbon molecules.

I

Impeller. Rotating device in a pump that forces the incoming commodity to be expelled at a greater pressure.

Indicator. A device used to indicate the liquid level, temperature, pressure or flow rate inside a piping system.

Instrument. One of many monitoring devices that can sense, measure, transmit, or control.

Instrument air. Piping system containing clean air used to operate instrumentation throughout a piping facility.

Instrumentation. The use of monitoring instruments to perform duties not permissible by human workers.

Insulation. Exterior covering on pipe or equipment that maintains a constant temperature. Also protection for workers from high temperature surfaces.

Insulation rings. Continuous circular rings welded to the exterior of a vertical vessel that support a vessel's insulation. Typically spaced on 12′-0″ centers.

K

Knockout drum. Piping equipment used to separate gases from liquids.

L

Ladder. Climbing apparatus that allows access to piping components at extreme elevations.

Level Alarm. Instrument that detects high or low liquid levels within a vessel and alerts plant operators with an audible or visual signal.

Level gauge (glass). A vertical transparent tube connected to the external surface of a vessel that allows visual inspection of internal liquid levels.

Level indicating controller. Instrument that indicates the liquid level of a vessel and can control the liquid level by transmitting signals to a control valve.

Level recorder. Makes a permanent record of liquid level in a vessel.

Level recording controller. Instrument that records the liquid level of a vessel and can control the liquid level by transmitting signals to a control valve.

Lifting lugs. Donut-shaped rings welded to the vessel's shell or head that allow the vessel to be raised and positioned during installation.

Line. Generic name given to reference a completed piping configuration.

Liquid. The physical state of matter possessing flow characteristics and minimal compressibility.

M

Malleable iron. Cast iron that has been heat-treated to improve its tensile strength.

Mandrel. A long, pointed shaft used to pierce molten steel billets to form seamless pipe.

Manhole. Similar to large nozzles that allow workers entry points into a vessel. Generally 18″ ID.

Manhole hinge. A hinge that creates a pivot point allowing the blind flange attached to the manhole to be easily removed for worker entrance.

Manifold. A main pipeway having numerous branch connections.

Manway. *See* manhole.

Match line. Lines used to divide the plot plan into small drawing areas.

Material takeoff. The gathering of descriptions, quantities, and prices for various components of the piping system, that is, pipe, flanges, fittings, valves, bolts, gaskets, etc.

Meter run. A clear run of pipe having a set of orifice flanges that is used to measure flow rate through the pipe.

N

Naphtha. Colorless flammable by-product of crude petroleum used in the manufacture of gasoline.

Nipple. A short length of pipe used to connect screwed or socket-weld fittings to one another.

Nozzle. The connecting point of the piping configuration to the vessel or equipment. Nozzles are provided in locations where a commodity is either introduced or removed from a vessel or piece of equipment.

Nozzle arrangement. The positioning of nozzles on a piece of piping equipment.

Nozzle orientation. Plan drawing depicting the location of nozzles around the perimeter of a vessel using angular measurements from 0°.

O

Octagon. An eight-sided concrete foundation placed below vertical vessels that distributes the vessel's load over a broader area.

O-lets. Any of several fittings used to make branch connections for welded, screwed, or socket-weld pipe.

Operator. Device used to activate valving.

Orifice flange. Flange with a hole drilled into the flange face perpendicular to the pipe that permits testing equipment to be inserted.

Orifice flange union. Pair of orifice flanges, orifice plate, bolts, nuts, jackscrews, and gaskets. Primary components of a meter run.

Orifice plate. Metal plate with a hole of predetermined size sandwiched between orifice flanges.

O.W.S. (Oily water sewer) An underground piping system used to collect and transfer contaminated discharge to a treatment facility.

P

P&ID. Piping and instrumentation diagram.

Pedestal. *See* foundation.

Pipe guide. *See* guide.

Pipe hanger. *See* hanger.

Pipe rack. Structural framework consisting of a series of vertical columns connected with horizontal members. Major thoroughfare for pipes traveling in a process facility.

Pipe support. Structural member that carries the weight of a piping configuration.

Piping. Generic term used to describe pipes, fittings, flanges, and valves in a facility.

Piping drawing index. Created from the plot plan, the index uses match lines to divide the piping facility into small drawing areas. These areas are assigned drawing numbers and distributed to drafters/designers for creation.

Plain end. Any piping component having square ends used for socket-weld connections.

Platform. An elevated walkway around a vessel or other piping equipment.

Plot plan. A master drawing showing the locations of all buildings, structures, and equipment in a piping facility.

Plug. Screwed fitting having external threads that terminates a piping configuration.

Plug valve. A particular valve having a rectangular shaped hole through a tapered plug. Uses one-quarter turn of a handle to align the hole with the valve port.

Pressure alarm. Instrument designed to signal dramatic changes in internal pressure.

Pressure controller. A control valve that regulates internal pressure of a pipe or vessel after receiving a signal from a transmitter.

Pressure differential recording controller. Controls the pressure differential between two pipes or vessels by means of a control valve.

Pressure indicator. Dial instrument that indicates internal pressure of a pipe or vessel.

Pressure indicating controller. Control valve with an indicating transmitter that controls internal pressure on a pipe or vessel.

Pressure recorder. A recording instrument that makes a permanent record of internal pressures within a pipe or vessel.

Pressure recording controller. Instrument similiar to a pressure recorder and having the capability to transmit a signal to a control valve.

Pressure safety valve. An automatic pressure-relieving device actuated by excessive internal pressure of a pipe or vessel.

Process equipment. Piping equipment having the capability to alter the chemical makeup of the commodity it contains.

Pump. Mechanical device used to move fluids under pressure from one location to another.

Purge. The act of removing foreign matter from the internal surfaces of a pipe or vessel.

R

Raised face. Type of flange facing used with flat ring gaskets. 150# and 300# raised face flanges have a 1/16″ raised face, and 400# and above flanges have a ¼″ raised face.

Rebar. Short form of *reinforcing bar.* A metal rod used in the reinforcement of concrete.

Reciprocating pump. Piping equipment with parts similar to a piston or plunger that moves back and forth to create pressure.

Recorder. A device used to record the liquid level, temperature, pressure or flow rate inside a vessel or piping system throughout a specified period of time.

Reducer. A pipe fitting with one end larger than the other that allows reductions in the diameter of a run of pipe.

Refinery. Process facility that breaks crude petroleum down into usable byproducts such as butane, propane, fuel oil, and lubricants.

Reflux. A liquid product returned to a fractionation column that aids in the fractionation process.

Reinforcing pad. A plate contoured to the shape of a vessel shell. It is positioned around nozzles to provide additional strength in the areas where metal was removed from the shell.

Restriction orifice. Standard orifice union assembly including spectacle blind used to create smooth flow.

Ring-type joint. Flange face that uses a steel ring rather than flat or full ring gasket.

Root gap. The 1/16″ space between two butt-weld fittings prior to welding.

Rotary pump. Displacement-type pump using pistons, gears, or screws to discharge a commodity.

Run. Generic name for any length of pipe.

Rung. Horizontal member of a ladder.

S

Saddle. U-shaped structural support welded to horizontal vessels and exchangers. Saddles are bolted to concrete foundations and create a craddle-like support in which the vessel can rest.

Schedule. Wall thickness of pipe.

Seal pan. Installed below the bottom tray in a vessel to prevent liquids from bypassing the trays.

Seamless. Pipe manufactured without any resulting welded connection.

Shape roller. Mechanical apparatus that sizes and shapes rolled plate to form pipe.

Shell. The cylindrical walls of a vessel.

Shell and tube. Type of heat exchanger having tube bundles contained within an outer vessel shell.

Shoe. Structural member welded to the bottom side of a pipe having insulation. Designed to prevent the insulation from being crushed when the pipe rests on a steel support.

Skelp. Plate that has been rolled and shaped into the form of a pipe.

Skirt. A cylinder-shaped support for a vertical vessel. One end is welded to the base plate allowing it to rest on the foundation, and the other end is welded to the bottom head of a vertical vessel.

Skirt access opening. An 18″ ID hole 2′-16″ above the foundation that allows workers entrance for inspection and maintainence.

Skirt fireproofing. Brick or granite material applied to the interior and occasionally exterior surfaces of a vessel skirt to prevent damage in the event of a fire.

Skirt vents. Equally spaced holes approximately 3″ to 4″ in diameter bored near the top of the vessel skirt that allow toxic and explosive gases to escape.

Sleeper. Near grade-level structural support used to support horizontal piping runs.

Slip-on flange. Flange with a low hub that allows pipe to be inserted prior to welding.

Slotted anchor. Saddle or other support having elongated bolt holes that allows for movement due to heat expansion.

Specifications. Guidelines established by governmental agencies, standards associations, and vendors, for plant design and construction.

Spectacle blind. A figure 8-shaped plate placed within an orifice flange assembly. One end has a hole through which flow can pass to create smooth flow for accurate instrument readings.

Spiral weld. Type of pipe formed by twisting metal plate in spiral shapes then welding.

Spool. Type of isometric or orthographic drawing containing dimensions and callouts for fabrication.

Spring hanger. Pipe hanger using a coil spring to absorb movement within a pipe.

Steam. The vapor phase of water.

Steam, dry. Steam that is devoid of suspended water particles.

Steam, saturated. Steam that exceeds boiling point temperature for an equivalent pressure.

Steam traced. Tubing coiled around a pipe containing steam to help maintain a desired temperature.

Steam turbine. Pump or generator driver using high pressure steam to power the turbine's impeller.

Stem. Threaded shaft within a valve that raises and lowers the valve wedge or disc by rotating the handwheel.

Stub-in. Branch connection made on a run of pipe without the use of a fitting.

Suction. The inlet or incoming side of a pump or compressor.

Swage. Typically a screwed or socket-weld type of fitting used to make a reduction in the diameter of the size of pipe.

T

Tank. Storage vessel used for the collection of process materials.

Tank farm. Area within a process facility where several storage tanks reside.

Tee. Three-way fitting used to make branch connections on a run of pipe.

Temperature alarm. Instrument designed to signal dramatic changes in internal temperature.

Temperature controller. A control valve that regulates internal temperature of a pipe or vessel after receiving a signal from a transmitter.

Temperature control valve. Valve using fluctuations in temperature to make adjustments in commodity flow.

Temperature element. Thermocouple that allows portable test equipment to be inserted to measure the temperature of the commodity within a pipe or vessel.

Temperature indicator. Instrument that indicates temperature of the commodity in a pipe or vessel (thermometer).

Temperature recorder. A recording instrument that makes a permanent record of temperature within a pipe or vessel.

Temperature recording controller. Instrument that provides simultaneous recording and regulation of the temperature within a pipe or vessel by sending a signal to a control valve and recorder.

Temperature well (Thermowell). Inserted into a coupling to protect the temperature instrument bulb.

Thermal expansion. Growth of pipe due to the application of heat.

Threaded end. Any piping component having internal or external threads.

Threads, external. Pipe component having screw threads cut into the exterior surface (male threads).

Threads, internal. Pipe component having screw threads cut into the interior surface (female threads).

Tower. Vertical vessel or column.

Tower, cooling. Equipment that dissipates heat gain in cooling water by evaporating specific amounts of water that has been aerated.

Transmitter. Instrument that sends signals to indicating, controlling, or recording devices.

Trapeze. Pipe hanger consisting of two vertical rods connected with a horizontal support member.

Tray. Flat metal plates spaced approximately 30″ apart inside a vertical vessel that aid in the fractionation of crude petroleum into by-products.

Tube bundle. Removable section of an exchanger containing internal tubes.

Tube sheet. Vertical plate separating the shell side from the channel end of an exchanger.

Turbulence. Uneven flow produced by directional changes or obstructions within the pipe.

U

Union. A three-piece fitting placed within a screwed or socket-weld configuration that permits quick disassembly of the configuration.

Utility. One of many plant services required for the efficient operation of the facility, for example, air, water, steam, sewer, and flares.

Utility air. Compressed air used to drive pneumatic tools, clean equipment, and perform other maintenance services.

V

Valve. Device used to control the flow of a commodity through a pipe.

Vapor. The gaseous state of any substance that is liquid or solid under ordinary circumstances.

Vapor lock. Trapped air or vapor in a pipe that prevents the flow of a commodity through the pipe.

Vendor. A third-party supplier of parts, equipment, or other components of the piping facility.

Vendor drawing. A drawing or rendering that depicts descriptive information pertaining to the equipment or piping component that a supplier or manufacturer delivers to the piping facility.

Vertical heater. Device used to raise the temperature of a commodity to the point at which it can be used in a process system.

Vessel. Generic term used to describe any closed container housing liquid, vapor, or gaseous commodity.

W

Wedge. Sealing component of a gate valve.

Weir. Dam-like plate welded on a tray that allows a fractionated by-product to collect and be extracted by a nozzle.

Welding ring. *See* back-up ring.

Weld neck flange. Flange with a tapered neck for butt-welding to other bevel-end piping components.

Index

A

Abbreviations, 126, 129–131
Accumulator, (*see* Horizontal vessel)
Actuator, 81
Aliases, 231
Anchors
  directional, 198
  fixed, 198
Arrangement drawings, 143–146
  dimensioning, 186
  layout procedures, 144
As-built drawings, 2
AutoLISP, 232–235

B

Back-up ring, 7
Base plate, 101
Battery limits, 186, 188
Bell and spigot, 9
Bench mark, 133
Beveled end, 7–8
Boiler (*see* Heater)
Bolts, 49, 57
Branch, 22
Butt-welded pipe, 4–5

C

Cage, 90–91
Cast iron, 4, 7–8
Cathodic protection, 208
Center-to-end, 14–15, 19, 26
Chain operator, 81
Codes
  piping, 123
Cold spring, 196–197
Compressor, 94–95, 101,103
Condensate, 203–204
Conditions
  design, 111
  operating, 111
Control valve manifold, 79, 204–205
  drawing of, 205
Cooling tower, 99
Corrosion allowance, 126
Coupling, 9, 27, 33, 38
Cutting plane, 144, 186, 188

D

Datum elevation, 187, 191
Defun, 233
Dike, 100
Downcomer, 103
Double random length, 5
Drift, 99
Dummy leg (*see* Field support)

E

Elbow
  90°, 13
    center-to-end, 14
    drawing of, 15–16
    drawing symbols, 15
    long radius,14
    mitered, 17–19
    rolled at 45°, 22–23
    short radius, 17–18
  45°, 19
    drawing of, 19–21
    drawing symbols, 20
Ell (*see* Elbow)
Elevation
  abbreviations, 133
  callouts, 133
  examples of, 135, 138
  invert, 136
  types, 187
Equipment location drawing, 136, 140
Exchanger
  air fan, 98

defined, 95
double pipe, 96
hair pin, 96
reboiler, 98
shell and tube, 95

F

Feed (*also* feed stock), 99–100
Field supports
base, 199
dummy, 200
pick-up, 201
Fins, 96
Fittings
buttweld, 13
cast iron, 38
flanged, 37
plastic, 38
screwed, 33
socketweld, 33
Fitting make-up, 31
dimensioning, 32
Flange
blind, 55
bolting, 57
defined, 48
face type, 48
lap joint, 53
length-thru-hub, 51
orifice, 56
pound ratings, 48
raised face, 49
face thickness, 49
reducing, 54
ring-type joint, 49
slip-on, 52
socketweld, 54
threaded, 53
types of, 50
weld neck, 51
drawing of, 51–53
drawing symbols, 51
Flash zone, 98, 100
Flow diagrams
abbreviations, 116
symbols found on, 115–116
types, 111
mechanical, 112
example, 113
process, 111
example, 112
utility, 112
example, 114
uses, 111
Foundation location drawing, 150
Fraction, 100
Fractional distillation, 90, 100
Frationation column (*see* Vertical vessel)

G

Gaskets, 57
Materials, 58
Thickness, 60
Types, 58
Grade, 133

H

Hanger rods, 200
rod and clevis, 200
spring hanger, 201
trapeze, 200
Head, 101
2:1 semi elliptical, 107
Header, 22
Heater, 99
Heat expansion, 197
Horizontal vessel, 90
drawing of, 106, 160

I

Inside diameter (ID), 5
Instrumentation
groups, 114
types, 114
alarms, 117
controllers, 117
gauges, 114
indicators, 117
recorders, 117
symbols, 115–116
Isometrics (isos), 210
dimensioning, 218
drawing of, 216
notes/callouts, 218–219
offsets, 219

dimensioning, 220
multiple angles, 222
rolling, 223
dimensioning of, 224–225
symbols, 212, 214–215
turning point, 211
Insulation ring, 103
Insulation shoe, 198

J

Jack screws, 56

K

Kettle reboiler, 161

L

Ladder, 90
Lead and oakum, 9
Lifting lugs, 103
Line number, 124
Line spacing chart, 194–195

M

Machine bolts, 57
Manhole, 103
hinge, 103
Manway, 90
Material take-off, 210
Mechanical equipment, 90
Meter run, 56, 206
location of, 207

N

Nominal pipe size, 5
North arrow, 133
Nozzle, 48, 102
orientation, 102
projection, 102

O

O-lets, 27
Operators, 81
Orifice flange union, 56
Orifice plate, 206–207
Outside diameter (OD), 5

P

P & ID, 112
Pipe
calculating inside diameter, 6
drawing of, 10
flexibility, 195
joining, 6
history, 4
manufacturing methods, 4
plastic, 10
schedule, 6
sizing, 5
thickness, 6
weight, 6
Pipe anchor, 198
Pipe guide, 198
Pipe loop, 197
Pipe nipple, 33
Pipe shoe, 198
Pipe spools, 2
Piperack,
drawing of, 194
spacing, 194–195
Plain end, 8
Plant coordinate system, 133
Plant elevation system, 133
Platform, 91
Plug, 33
Pocket, 201
Pound ratings, 48
Pump
centrifugal, 91
defined, 91
drivers, 94
nozzle arrangements, 94
reciprocating, 93
rotary, 93

R

Reducer
types, 28
drawing of, 30–31
drawing symbols, 29–30

Reinforcing pad, 103
Rolling offsets, 223
  dimensioning of, 224–225
Root gap, 7

S

Saddles, 103
Sections, 187
Seal pan, 103
Seal weld, 54
Seamless pipe, 4
Sewer systems, 207–208
Shapers, 4
Shell, 101
Single random length, 5
Site plan, 138
Skirt, 101
  access opening, 101
  fireproofing, 102
  vents, 101
Specifications
  classes, 125
  piping, 123
  sample of, 124, 127–128
Spiral weld, 5
Standard piping detail, 194
Steam trap, 204
Storage tank, 99–100
Stripping steam, 99, 203
Stub-in, 26
  drawing symbols, 26
  reinforcements, 27
  welding minimums, 27
Stud bolts, 57
Swage, 36

T

Tabor abrasion test, 10
Tank farm, 100
Tee, 22
Thread end, 7
Thread engagement, 8
Three-dimensional modeling, 237
Tick marks (*gaskets*), 60
Tray, 90, 103

U

Underground piping system, 208
Union, 33
Unit plot plan, 136
Utilities,
  air systems, 204
  fuel oil/gas, 204
  flare systems, 204
  water systems, 203
Utility station, 206

V

Valve
  angle, 73–74
  ball, 75
  block, 204
  butterfly, 77
  bypass, 205
  check, 74–75
  control, 79
  defined, 69
  drain, 205
  face-to-face, 71
  gate, 70–71
    drawing of, 71–73
  globe, 72–73
  plug, 77
  pressure safety, 78–79
  relief, 78–79
  stem, 71
Vendor
  defined, 103
  drawings, 104–105
Vessel
  horizontal, 90
  vertical, 90

W

Weir, 103
Weld cap, 31
  drawing symbols, 32
Weld tee, 22
  drawing of, 26
  drawing symbols, 24
Welding saddle, 27